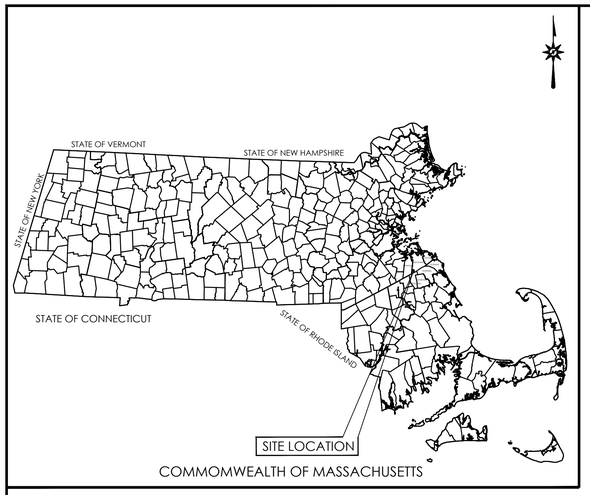

LOCATION MAP

N.T.S.

LAND DEVELOPMENT PLANS ISSUED FOR TOWN OF HINGHAM CONSERVATION COMMISSION AND PLANNING BOARD APPROVAL

100 INDUSTRIAL PARK ROAD HINGHAM, MA

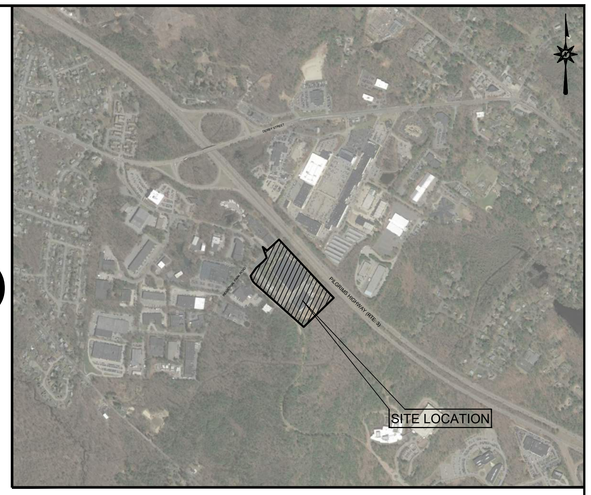

VICINITY MAP

SCALE: 1"=1000'

CONTENTS

	TITLE SHEET
AL-1	ALTA/NSPS LAND TITLE SURVEY 1OF 2 AND 2 OF 2
DM-0	OVERALL DEMOLITION PLAN
DM-1, 2	DEMOLITION PLAN
SP-0	OVERALL SITE PLAN
SP-1, 2	SITE PLAN
SP-3	SITE SIGNAGE AND PAVEMENT MARKING PLAN
TT-1, 2, 3	TRUCK TURNING PLAN
GD-0	OVERALL GRADING AND DRAINAGE PLAN
GD-1, 2	GRADING AND DRAINAGE PLAN
SU-0	OVERALL SITE UTILITIES PLAN
SU-1, 2	SITE UTILITIES PLAN
EC-0	OVERALL SEDIMENT AND EROSION CONTROL PLAN
EC-1, 2	SEDIMENT AND EROSION CONTROL PLAN
EC-3	SEDIMENT AND EROSION CONTROL NOTES
EC-4, 5	SEDIMENT AND EROSION CONTROL DETAILS
LL-0	OVERALL LANDSCAPE PLAN
LL-1, 2	LANDSCAPE PLAN
LL-3	LANDSCAPE DETAILS AND NOTES
LL-4	EXISTING TREE PLAN
LP-0	OVERALL LIGHTING PLAN
LP-1, 2	LIGHTING PLAN
GN-1	GENERAL NOTES
DN-1, 2, 3, 4, 5, 6	DETAIL SHEETS
A1.01	OVERALL FLOOR PLAN

CAD FILE: CV190151701

XREF(S): XO1800425_Counties

PREPARED BY:

BL Companies

ARCHITECTURE
ENGINEERING
ENVIRONMENTAL
LAND SURVEYING

355 RESEARCH PARKWAY
MERIDEN, CONNECTICUT 06450
(203) 630-1406
(203) 630-2615 Fax

OWNER:

JEB GROUP LLC
PO BOX E-62
BOSTON, MA 02127

DATES

ISSUE DATE: MARCH 6, 2020

REVISION: MAY 12, 2020
JUNE 1, 2020
JULY 13, 2020

© 2020 BL COMPANIES, INC. THESE DRAWINGS SHALL NOT BE UTILIZED BY ANY PERSON, FIRM OR CORPORATION WITHOUT THE SPECIFIC WRITTEN PERMISSION OF BL COMPANIES.

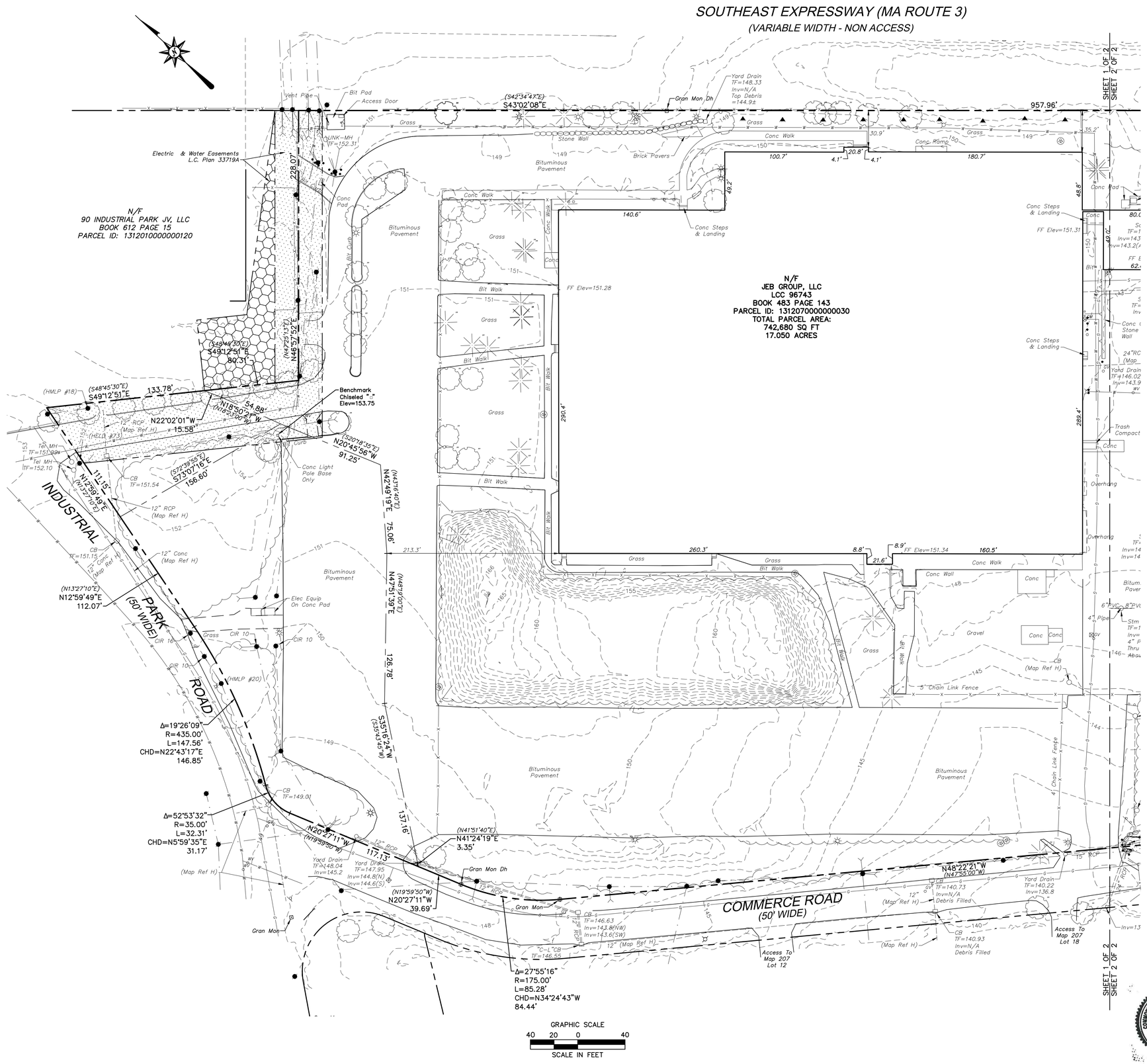

GENERAL NOTES

1. NORTH ARROW AND BEARINGS REFER TO NAD 83, MASSACHUSETTS MAINLAND STATE PLANE COORDINATES AND ARE BASED ON GPS OBSERVATIONS PERFORMED BY BL COMPANIES DURING SEPTEMBER 2019.
2. ELEVATIONS REFER TO NAVD 88 AND ARE BASED ON GPS OBSERVATIONS PERFORMED BY BL COMPANIES DURING SEPTEMBER 2019.
3. PARCEL IS LOCATED WITHIN FLOOD ZONES "A" & "X" AS DEPICTED ON F.I.R.M. COMMUNITY PANEL NO. 25023C0091J REVISED: JULY 17, 2012..
4. THE UNDERGROUND UTILITIES DEPICTED HAVE BEEN PLOTTED FROM FIELD SURVEY INFORMATION AND EXISTING DRAWINGS. THE SURVEYOR MAKES NO GUARANTEES THAT THE UNDERGROUND UTILITIES DEPICTED COMPRISE ALL SUCH UTILITIES IN THE AREA, EITHER IN SERVICE OR ABANDONED. THE SURVEYOR FURTHER DOES NOT WARRANT THAT THE UNDERGROUND UTILITIES DEPICTED ARE IN THE EXACT LOCATION INDICATED THOUGH THEY ARE PLOTTED AS ACCURATELY AS POSSIBLE FROM INFORMATION AVAILABLE. THE SURVEYOR HAS NOT PHYSICALLY EXPOSED THE UNDERGROUND UTILITIES. PER MASSACHUSETTS COMMONWEALTH LAW, THE CONTRACTOR SHALL CONFIRM THE LOCATION OF ALL UTILITIES PRIOR TO THE COMMENCEMENT OF EXCAVATION. CALL DIGSAFE AT 811.
5. WETLAND FLAGS DEPICTED HEREON ARE BASED ON "RESOURCE AREA DELINEATION PLAN, DRAWING NUMBER 1 OF 1, DATED SEPTEMBER 26, 2016 AND REVISED OCTOBER 12, 2016 BY BEALE ASSOCIATES." ORDER OF RESOURCE DELINEATION: DEP # 034-1271 EXTENSION EXPIRES ON FEBRUARY 19, 2023.
6. THERE WAS NO EVIDENCE OF RECENT EARTH MOVING WORK, BUILDING CONSTRUCTION, OR BUILDING ADDITIONS OBSERVED WHILE CONDUCTING FIELDWORK.
7. THERE WAS NO EVIDENCE OF PROPOSED CHANGES IN STREET RIGHT OF WAY LINES OR RECENT STREET AND SIDEWALK CONSTRUCTION OR REPAIRS WHILE CONDUCTING FIELDWORK.
8. THERE WAS NO EVIDENCE OF CEMETERIES OR BURIAL GROUNDS WHILE CONDUCTING FIELDWORK.
9. THERE ARE NO PARTY WALLS WITH RESPECT TO ADJOINING PROPERTIES.
10. PARCEL AREA IS 742,680 SQUARE FEET OR 17.050 ACRES.
11. THIS SURVEY WAS PERFORMED WITHOUT THE BENEFIT OF A TITLE COMMITMENT.
12. THE SITE IS SUBJECT TO AN "ACTIVITY AND USE LIMITATION", DOCUMENT#543142 RECORDED 7/24/2003 AND "ACTIVITY AND USE LIMITATION", DOCUMENT#690193 RECORDED 4/9/2012.
13. THE SITE IS TOGETHER WITH THE RIGHT OF WAY OVER COMMERCE ROAD AND INDUSTRIAL PARK ROAD PER DOCUMENT#111510 RECORDED 3/1/1967

PLAN REFERENCES

A. "PLAN OF LAND IN HINGHAM, LEWIS W. PERKINS & SONS, SURVEYORS" DATE: JUNE 29, 1953. LAND COURT PLAN#24468A ON THE PLYMOUTH COUNTY LAND RECORDS.

B. "SUBDIVISION PLAN OF LAND IN HINGHAM, LEWIS W. PERKINS & SON, SURVEYORS" DATE: NOVEMBER 8, 1964. LAND COURT PLAN#24468C ON THE PLYMOUTH COUNTY LAND RECORDS.

C. "PLAN OF LAND IN HINGHAM, LEWIS W. PERKINS & SON, SURVEYORS" DATE: NOVEMBER 8, 1964, MAY 21, 1965 & JANUARY 14, 1966. LAND COURT PLAN#287222A.

D. "PLAN OF LAND IN HINGHAM, LEWIS W. PERKINS & SONS, SURVEYORS" DATE: APRIL 2, 1965. LAND COURT PLAN #33719A ON THE PLYMOUTH COUNTY LAND RECORDS.

E. "SUBDIVISION PLAN OF LAND IN HINGHAM, PERKINS ENGINEERING, INC., SURVEYORS" DATE: MARCH 13, 1975. SCALE: 60 FEET TO AN INCH. LAND COURT PLAN #24468G ON THE PLYMOUTH COUNTY LAND RECORDS.

F. "SUBDIVISION, PLAN OF LAND ON COMMERCE ROAD IN HINGHAM, MASS. (PLYMOUTH COUNTY)" BY BOSTON SURVEY CONSULTANTS. SCALE: 1 INCH = 80 FEET. DATE: JULY 19, 1977. RECORDED IN BOOK 19, PAGE 623.

G. "RESOURCE AREA DELINEATION PLAN, DRAWING NUMBER 1 OF 1, SCALE: 1"=30'. DATE: SEPTEMBER 26, 2016 REV TO OCTOBER 12, 2016." MAP PREPARED BY BEALE ASSOCIATES.

H. "ALTA/ASCM LAND TITLE SURVEY 100 INDUSTRIAL PARK ROAD HINGHAM (PLYMOUTH COUNTY) MASS." SCALE: 1"=40', DECEMBER 8, 1989, REVISED: DECEMBER 12, 1989, BY HARRY R. FELDMAN, INC., BOSTON, MASS.

LEGEND

	Property Line		Handhole
	Easement Line		Electric Meter
(N25°15'32"W)	Land Court Plan Bearing		Utility Pole
			Utility Pole w/ Light
			Guy Wire
	Edge of Water		Light Pole
	Limit of Wetlands		Bollard Light
			Flood Light
	Treeline	GV	Gas Valve
	Brushline	GM	Gas Meter
50	Major Contour		Cleanout
	Minor Contour	CB	Catch Basin
	Stone Wall	MH	Manhole
	Retaining Wall		Fire Hydrant
	Guide Rail	WV	Water Valve
X X	Fence	WM	Water Meter
	Overhead Wires	W	Water Well
G G	Gas Line		Sign
S S	Sanitary Sewer		Bollard
	Storm Sewer		Handicap Symbol
W W	Water Line	M	Mail Box
	Shrub	W	Monitoring Well
			Boring
	Deciduous Tree		
	Coniferous Tree		

SURVEY CERTIFICATION

TO:

THIS IS TO CERTIFY THAT THIS MAP OR PLAT AND THE SURVEY ON WHICH IT IS BASED WERE MADE IN ACCORDANCE WITH THE 2016 MINIMUM STANDARD DETAIL REQUIREMENTS FOR ALTA/NSPS LAND TITLE SURVEYS, JOINTLY ESTABLISHED AND ADOPTED BY ALTA AND NSPS, AND INCLUDES ITEMS 2-5,7(a),7(b),7(c),8,9,10(a),11,13,14,16-18, AND 20 OF TABLE A THEREOF. THE FIELD WORK WAS COMPLETED ON SEPTEMBER 3, 2019.

COMMONWEALTH OF MASSACHUSETTS
JENNIFER MARKS
#38712
PROFESSIONAL LAND SURVEYOR

DATED: 7/13/2020 SIGNED: Jennifer Marks
JENNIFER MARKS L.S. #38712

Architecture
Engineering
Environmental
Land Surveying
BL Companies
355 Research Parkway
Meriden, CT 06450
(203) 630-1406
(203) 630-2615 Fax

LAND OF JEB GROUP, LLC
100 INDUSTRIAL PARK ROAD
HINGHAM, PLYMOUTH COUNTY, MASSACHUSETTS

REVISIONS No.	Date	Desc.
1.	03/09/2020	Revised Wetland Locations per Order of Resource Area Delineation DEP File #034-1271
2.	07/10/2020	Revised Storm Drainage Per Map Ref. H.

Surveyed	TN/DO
Drawn	JS
Reviewed	PJC
Scale	1"=40'
Project No.	1901517
Date	09/27/2019
Field Book	506
CAD File: AL190151701	

Title
ALTA/NSPS
LAND TITLE
SURVEY

Sheet No. 1 of 2

AL-1

Xref(s): XY190151701

Jul 10, 2020 5:49pm pchanger G:\JOBS\19\1901517\DWG\AL190151701.dwg
Layout: AL-1 Sheet 1 of 2

© 2020 BL COMPANIES, INC. THESE DRAWINGS SHALL NOT BE UTILIZED BY ANY PERSON, FIRM OR CORPORATION WITHOUT THE SPECIFIC WRITTEN PERMISSION OF BL COMPANIES.

LOCATION MAP

NOT TO SCALE

RECORD LEGAL DESCRIPTION

THAT CERTAIN PARCEL OF LAND SITUATE IN HINGHAM, IN THE COUNTY OF PLYMOUTH AND COMMONWEALTH OF MASSACHUSETTS, DESCRIBED AS FOLLOWS:

BEING LOT 4 AS DETERMINED BY THE COURT TO BE LOCATED AS SHOWN ON PLAN #28722A, DRAWN BY LEWIS W. PERKINS & SON, SURVEYORS, DATED NOVEMBER 8, 1964, MAY 21, 1965 AND JANUARY 14, 1966, AS MODIFIED AND APPROVED BY THE COURT, FILED IN THE LAND REGISTRATION OFFICE, A COPY OF A PORTION OF WHICH IS FILED WITH CERTIFICATE OF TITLE NO. 41721; ALSO ANOTHER CERTAIN PARCEL OF LAND AS DETERMINED BY THE COURT TO BE LOCATED AS SHOWN ON PLAN #33719A, DRAWN BY LEWIS W. PERKINS & SON, SURVEYORS, DATED APRIL 2, 1965, AS MODIFIED AND APPROVED BY THE COURT, FILED IN THE LAND REGISTRATION OFFICE, A COPY OF A PORTION OF WHICH IS FILED WITH CERTIFICATE OF TITLE NO. 39764; AND LOT 60 ON SUBDIVISION PLAN #24468C, DRAWN BY LEWIS W. PERKINS & SON, SURVEYORS, DATED NOVEMBER 8, 1964 AND FILED WITH CERTIFICATE OF TITLE NO. 20654.

THERE IS EXCEPTED AND EXCLUDED FROM THE LAND IN CASE #33719, THE FEE IN THE SOUTHEAST EXPRESSWAY (NO ACCESS) AND COMMERCE ROAD ABUTTING SAID LAND.

WHICH PREMISES ARE MORE PARTICULARLY DESCRIBED IN EXHIBIT A–1 ATTACHED HERETO AND MADE A PART HEREOF.

PARCELS OF LAND SITUATED IN THE TOWN OF HINGHAM, COUNTY OF PLYMOUTH, COMMONWEALTH OF MASSACHUSETTS, TOGETHER WITH THE BUILDINGS AND IMPROVEMENTS LOCATED THEREON, BOUNDED AND DESCRIBED AS FOLLOWS:

NORTHWESTERLY: BY INDUSTRIAL PARK ROAD, ONE HUNDRED ELEVEN AND 15/100 (111.15) FEET;

NORTHEASTERLY: BY LOT 7, AS SHOWN ON THE PLAN HEREINAFTER MENTIONED, ONE HUNDRED THIRTY–THREE AND 78/100 (133.78) FEET;

NORTHEASTERLY: BY LAND NOW OR FORMERLY OF REED ROLLED THREAD DIE COMPANY, SEVENTY AND 46/100 (70.46) FEET; AND

SOUTHERLY: BY LAND NOW OR FORMERLY OF ARTHUR OMAN AND SONS, INC. ONE HUNDRED FIFTY–SIX AND 60/100 (156.60) FEET.

ALL OF SAID BOUNDARIES ARE DETERMINED BY THE PLYMOUTH COUNTY REGISTRY DISTRICT OF THE LAND COURT TO BE LOCATED AS SHOWN ON PLAN # 28722A, DRAWN BY LEWIS W. PERKINS & SON, SURVEYORS, DATED NOVEMBER 8, 1964, MAY 21, 1965 AND JANUARY 14, 1966, AS MODIFIED AND APPROVED BY SAID COURT FILED IN THE LAND REGISTRATION OFFICE, A COPY OF A PORTION OF WHICH IS FILED WITH CERTIFICATE OF TITLE NO. 41721 AND THE ABOVE DESCRIBED LAND IS SHOWN AS LOT 4 ON SAID PLAN.

THERE IS APPURTENANT TO SAID LOT THE RIGHT TO USE SAID INDUSTRIAL PARK ROAD, AS SHOWN ON SAID PLAN FOR ALL PURPOSES FOR WHICH STREETS OR WAYS ARE COMMONLY USED IN THE TOWN OF HINGHAM.

ALSO THAT CERTAIN PARCEL OF LAND SITUATED IN SAID TOWN OF HINGHAM BOUNDED AND DESCRIBED AS FOLLOWS:

NORTHEASTERLY: BY THE SOUTHWESTERLY LINE OF SOUTHEAST EXPRESSWAY (NO ACCESS), ELEVEN HUNDRED SEVENTEEN AND 28/100 (1117.28) FT.

SOUTHEASTERLY: FIVE HUNDRED EIGHTY–THREE AND 41/100 (583.41) FEET;

SOUTHWESTERLY: TWO HUNDRED FIFTY–NINE AND 92/100 (259.92) FEET BY LAND NOW OR FORMERLY OF WALLACE R. MARDEN, TRUSTEES;

SOUTHWESTERLY: BY THE NORTHEASTERLY LINE OF COMMERCE ROAD, SEVEN HUNDRED SEVENTY–SIX AND 82/100 (76.82) FEET;

NORTHWESTERLY: BY LAND NOW OR FORMERLY OF ARTHUR OMAN & SONS, INC, THREE HUNDRED FORTY–TWO AND 35/100 (342.35) FEET;

SOUTHWESTERLY: BY LAND NOW OR FORMERLY OF SAID OMAN & SONS, INC AND OF OMAN REALTY, INC, ONE HUNDRED SIXTY–ONE AND 71/100 (161.71) FEET;

NORTHEASTERLY: EIGHTY AND 31/100 (80.31) FEET; AND

NORTHWESTERLY: TWO HUNDRED TWENTY–EIGHT AND 08/100 (228.08) FEET BY LAND NOW OR FORMERLY OF WALLACE R. MARDEN, TRUSTEE.

ALL OF SAID BOUNDARIES ARE DETERMINE BY THE PLYMOUTH COUNTY REGISTRY DISTRICT OF THE LAND COURT TO BE LOCATED AS SHOWN ON PLAN #33719A, DRAWN BY LEWIS W. PERKINS & SON, SURVEYORS, DATED APRIL 2, 1965, AS MODIFIED AND APPROVED BY SAID COURT FILED IN THE PLYMOUTH COUNTY LAND REGISTRATION OFFICE, A COPY OF A PORTION OF WHICH IS FILED WITH CERTIFICATE OF TITLE NO, 39764.

ALSO ANOTHER CERTAIN PARCEL OF LAND SITUATED IN SAID TOWN OF HINGHAM BOUNDED AND DESCRIBED AS FOLLOWS:

SOUTHWESTERLY: BY COMMERCE ROAD, ONE HUNDRED SEVENTEEN AND 11/100 (117.11) FEET;

WESTERLY: BY THE JUNCTION OF SAID COMMERCE ROAD AND INDUSTRIAL PARK ROAD MEASURING ON THE CURING LINE THEREOF THIRTY–TWO AND 31/100 (32.31) FEET;

NORTHWESTERLY: BY SAID INDUSTRIAL PARK ROAD, TWO HUNDRED FIFTY–NINE AND 63/100 (259.63) FEET;

NORTHEASTERLY: BY LAND NOW OR FORMERLY OF OMAN REALTY INC, ONE HUNDRED FIFTY–SIX AND 60/100 (156.60) FEET; AND AGAIN

NORTHEASTERLY: BY LAND NOW OR FORMERLY OF GORDON P. MARSHALL, NINETY–ONE AND 25/100 (91.25) FEET; AND

SOUTHEASTERLY: BY LAND NOW OR FORMERLY OF GILBERT M. WEST, CO, INC., THREE HUNDRED FORTY–TWO AND 35/100 (342.35) FEET.

SAID PARCEL IS SHOW AS LOT 60 ON SUBDIVISION PLAN #24468C DRAWN BY LEWIS W. PERKINS & SON, SURVEYORS, DATED NOVEMBER 8, 1964 AND FILED WITH CERTIFICATE OF TITLE NO. 20654.

GENERAL NOTES

1. SEE PAGE 1 OF 2 FOR NOTES, MAPR REFERENCES AND CERTIFICATION.

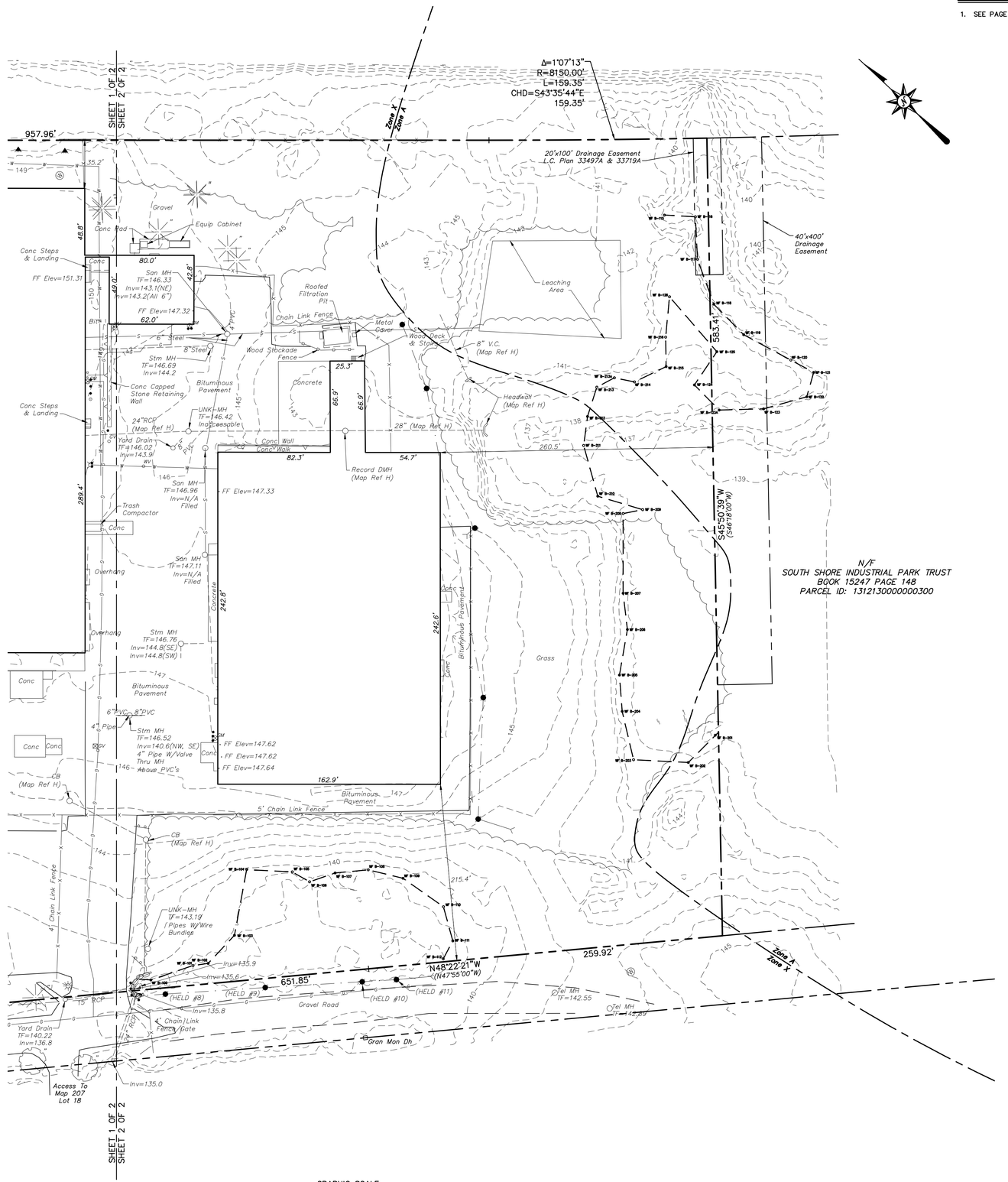

Architecture
Engineering
Environmental
Land Surveying

BL Companies

355 Research Parkway
Meriden, CT 06450
(203) 630-1406
(203) 630-2615 Fax

LAND OF JEB GROUP, LLC

100 INDUSTRIAL PARK ROAD

HINGHAM, PLYMOUTH COUNTY, MASSACHUSETTS

REVISIONS

No.	Date	Desc.
1.	03/09/2020	Revised Wetland Location per Order of Resource Area Determination of Applicability
2.	07/10/2020	Revised Storm Drainage Per Map Ref. H.

Surveyed	TN/DO
Drawn	JS
Reviewed	PJC
Scale	1"=40'
Project No.	1901517
Date	09/27/2019
Field Book	506

CAD File: AL190151701

Title

ALTA/NSPS LAND TITLE SURVEY

Sheet No. 2 of 2

AL-1

Jul 10, 2020 5:49pm jschrager G:\JOBS\19 14\1901517\DWG\AL190151701.dwg
Layout: AL-1 Sheet 2 of 2

Xref(s): XY190151701

© 2020 BL COMPANIES, INC. THESE DRAWINGS SHALL NOT BE UTILIZED BY ANY PERSON, FIRM OR CORPORATION WITHOUT THE SPECIFIC WRITTEN PERMISSION OF BL COMPANIES.

DEMOLITION LEGEND

— — —	PROPERTY LINE
—— LOD ——	LIMIT OF DISTURBANCE LINE AND CONTRACT LIMIT LINE
— — — —	SAWCUT LINE
XXXXXXXXXXXXXXXXXXXX	REMOVE AND DISPOSE OF UNDERGROUND STORMWATER OR UTILITY PIPE, CURB, FENCING, WALLS, OVERHEAD WIRES, ETC.
×	REMOVE AND DISPOSE OF LIGHT POLE, SIGN, PIPING, UTILITY STRUCTURE, APPURTENANCE, FIXTURE, TREE, AND/OR TREE STUMP ETC.
⊗	REMOVE AND DISPOSE OF TREE, SHRUB, AND/OR STUMP (TYP.)
(S)	EXISTING TREE/ SHRUBS OR UTILITY STRUCTURE TO REMAIN AND BE PROTECTED (TYP.)
	REMOVE AND DISPOSE OF EXISTING CONCRETE PADS AND/OR CONCRETE SIDEWALKS
	REMOVE AND DISPOSE OF EXISTING BITUMINOUS CONCRETE PAVEMENT STRUCTURE
	REMOVE AND DISPOSE OF EXISTING BUILDING AND FOUNDATION
	REMOVE AND DISPOSE OF EXISTING WOODLAND AND LANDSCAPED AREA
—— WB —— WB ——	50' AND 100' WETLAND BUFFERS

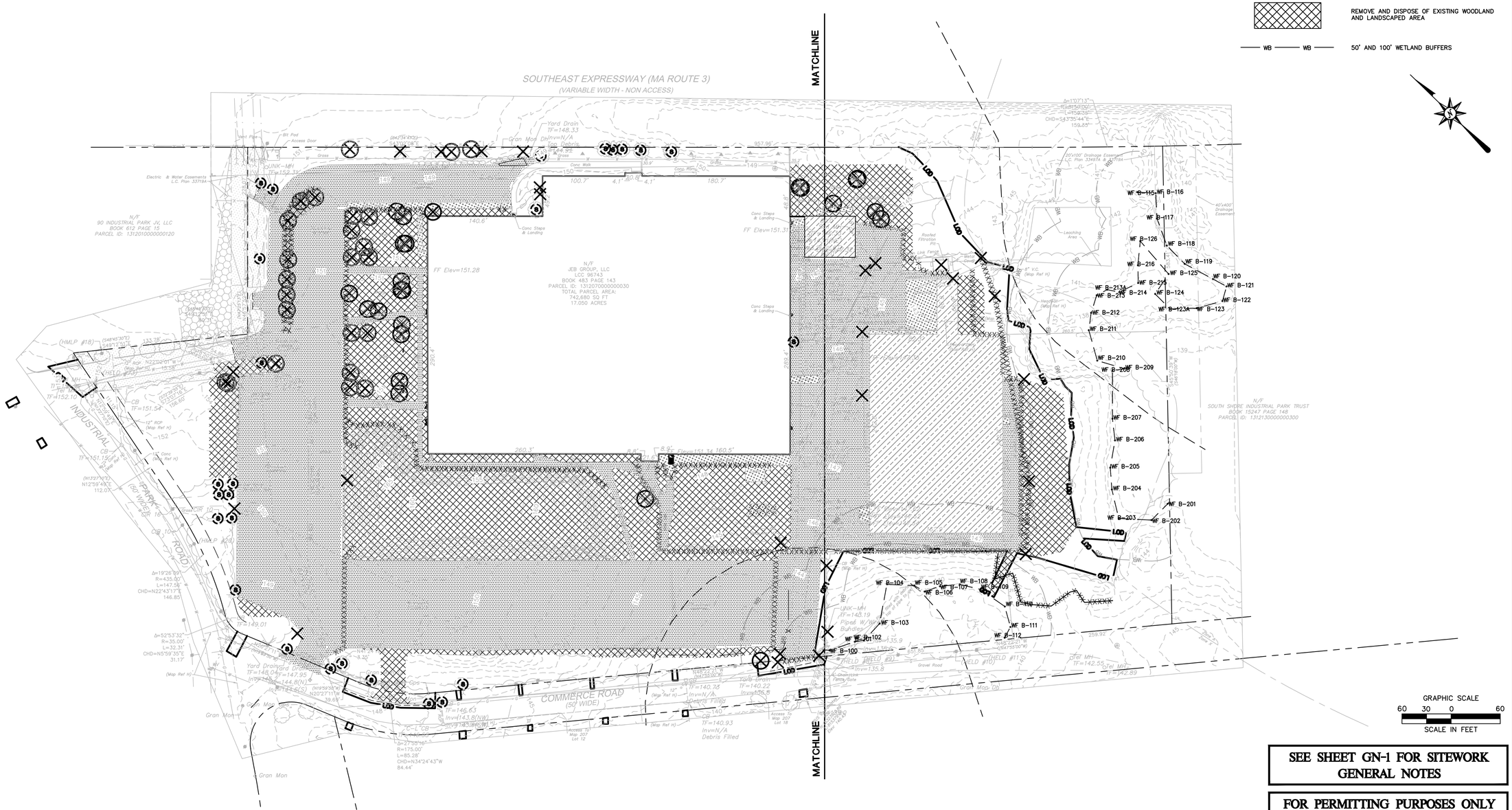

SEE SHEET GN-1 FOR SITEWORK GENERAL NOTES

FOR PERMITTING PURPOSES ONLY NOT RELEASED FOR CONSTRUCTION

Architecture
Engineering
Environmental
Land Surveying

BL Companies

355 Research Parkway
Meriden, CT 06450
(203) 630-1406
(203) 630-2615 Fax

COMMONWEALTH OF MASSACHUSETTS
ROBERT M. BOLER
CIVIL
No. 54612
REGISTERED PROFESSIONAL ENGINEER

PROPOSED DEVELOPMENT
100 INDUSTRIAL PARK ROAD
HINGHAM, MASSACHUSETTS

REVISIONS

No.	Date	Desc.
1.	05/12/2020	Revised per Staff and Commission Comments
2.	06/01/2020	Revised per Staff and Commission Comments
3.	07/10/2020	Revised per Planning and Peer Review Comments

Designed	A.T.K.
Drawn	A.T.K.
Reviewed	K.W.H.
Scale	1"=60'
Project No.	1901517
Date	03/06/2020
CAD File: DM190151701	

Title

OVERALL DEMOLITION PLAN

Sheet No.

DM-0

Xref (s): : BD190151701 ; XC190151701 ; XL190151701 ; XC190151703 ; XE190151701 ; XY190151701 ; XC190151702

Jul 13, 2020-8:06am u6606 G:\JOBS1\91\61\7\DWG\DM\190151701.dwg
LAYOUT: DM-0 USER: u6606 PC-MODEL: N/A VIEW: 01 DWG: 2018 PC3: BW-CTB-ANSI-D.PC3 PAPER: ANSI-D

© 2020 BL COMPANIES, INC. THESE DRAWINGS SHALL NOT BE UTILIZED BY ANY PERSON, FIRM OR CORPORATION WITHOUT THE SPECIFIC WRITTEN PERMISSION OF BL COMPANIES.

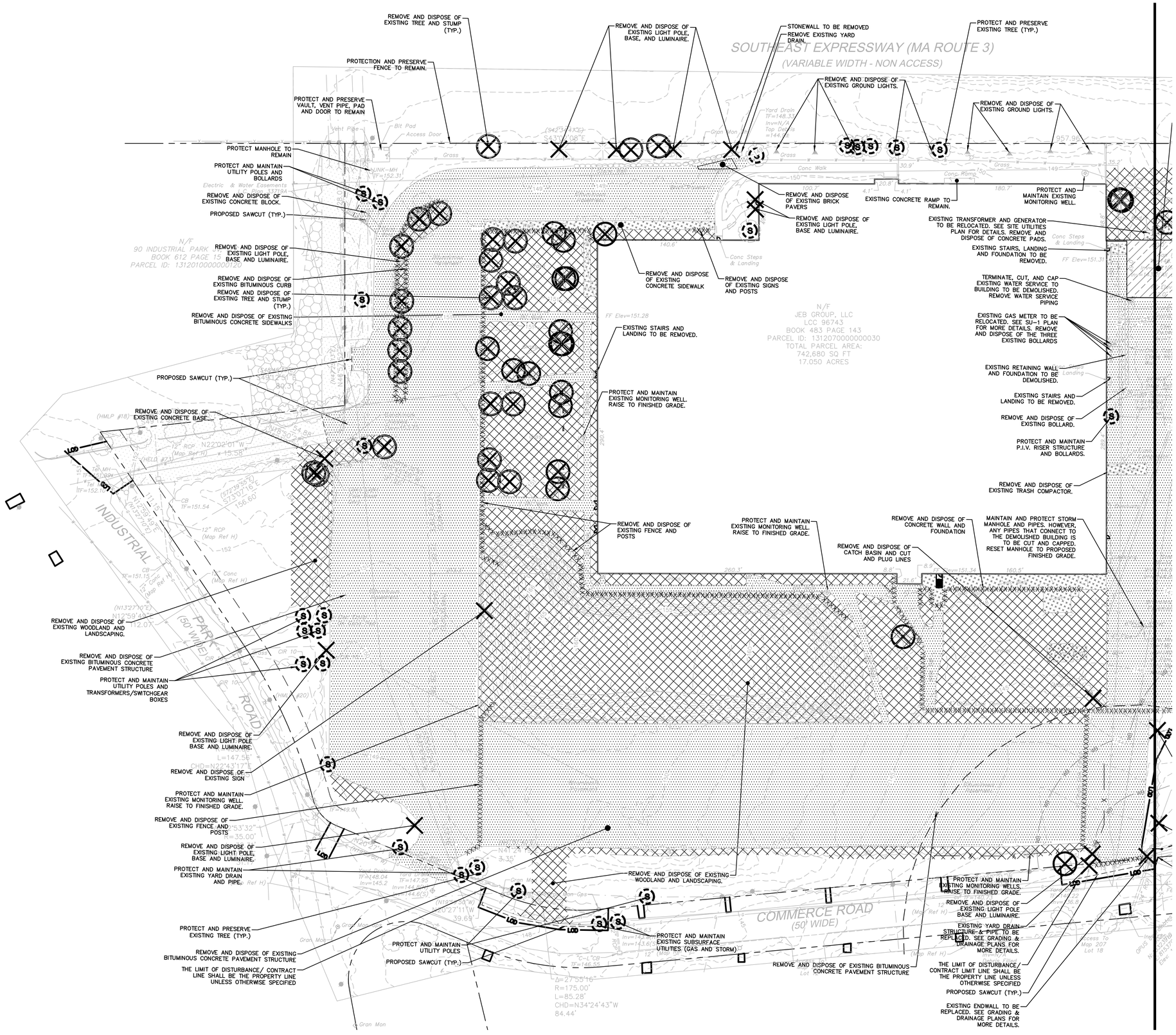

DEMOLITION LEGEND

	PROPERTY LINE
LOD	LIMIT OF DISTURBANCE LINE AND CONTRACT LIMIT LINE
	SAWCUT LINE
X	CONSTRUCTION CHAIN LINK FENCE
XXXXXXXXXXXXXXXXXXXX	REMOVE AND DISPOSE OF UNDERGROUND STORMWATER OR UTILITY PIPE, CURB, FENCING, WALLS, OVERHEAD WIRES, ETC.
X	REMOVE AND DISPOSE OF LIGHT POLE, SIGN, PIPING, UTILITY STRUCTURE, APPURTENANCE, FIXTURE, TREE, AND/OR TREE STUMP ETC.
	REMOVE AND DISPOSE OF TREE, SHRUB, AND/OR STUMP (TYP.)
S	EXISTING TREE/ SHRUBS OR UTILITY STRUCTURE TO REMAIN AND BE PROTECTED (TYP.)
	REMOVE AND DISPOSE OF EXISTING CONCRETE PADS AND/OR CONCRETE SIDEWALKS
	REMOVE AND DISPOSE OF EXISTING BITUMINOUS CONCRETE PAVEMENT STRUCTURE
	REMOVE AND DISPOSE OF EXISTING BUILDING AND FOUNDATION
	REMOVE AND DISPOSE OF EXISTING WOODLAND AND LANDSCAPED AREA
WB WB	50' AND 100' WETLAND BUFFERS

SEE SHEET GN-1 FOR SITEWORK GENERAL NOTES

FOR PERMITTING PURPOSES ONLY NOT RELEASED FOR CONSTRUCTION

GRAPHIC SCALE
40 20 0 40
SCALE IN FEET

Architecture
Engineering
Environmental
Land Surveying
BL Companies
355 Research Parkway
Meriden, CT 06450
(203) 630-1406
(203) 630-2615 Fax

COMMONWEALTH OF MASSACHUSETTS
ROBERT M. ROLES
No. 54612
REGISTERED PROFESSIONAL ENGINEER

PROPOSED DEVELOPMENT
100 INDUSTRIAL PARK ROAD
HINGHAM, MASSACHUSETTS

REVISIONS

No.	Date	Desc.
1.	05/12/2020	Revised per Staff and Commision Comments
2.	06/01/2020	Revised per Staff and Commision Comments
3.	07/13/2020	Revised per Planning and Peer Review Comments

Designed	A.T.K.
Drawn	A.T.K.
Reviewed	K.W.H.
Scale	1"=40'
Project No.	1901517
Date	03/06/2020
CAD File: DM190151701	

Title
DEMOLITION PLAN

Sheet No.
DM-1

Xref (s): -BD190151701 ; XC190151701 ; XL190151701 ; XC190151703 ; XE190151701 ; XY190151701 ; XC190151702

Jul 13, 2020 8:06am oddose G:\JOBS\19\1451901517\DWG\DM190151701.dwg
Layout: DM-1 DOMESTIC 36x24 Plot Date: Mar 06, 2020 Plotted By: Todd Oddose 24x36 ANSI C

© 2020 BL COMPANIES, INC. THESE DRAWINGS SHALL NOT BE UTILIZED BY ANY PERSON, FIRM OR CORPORATION WITHOUT THE SPECIFIC WRITTEN PERMISSION OF BL COMPANIES.

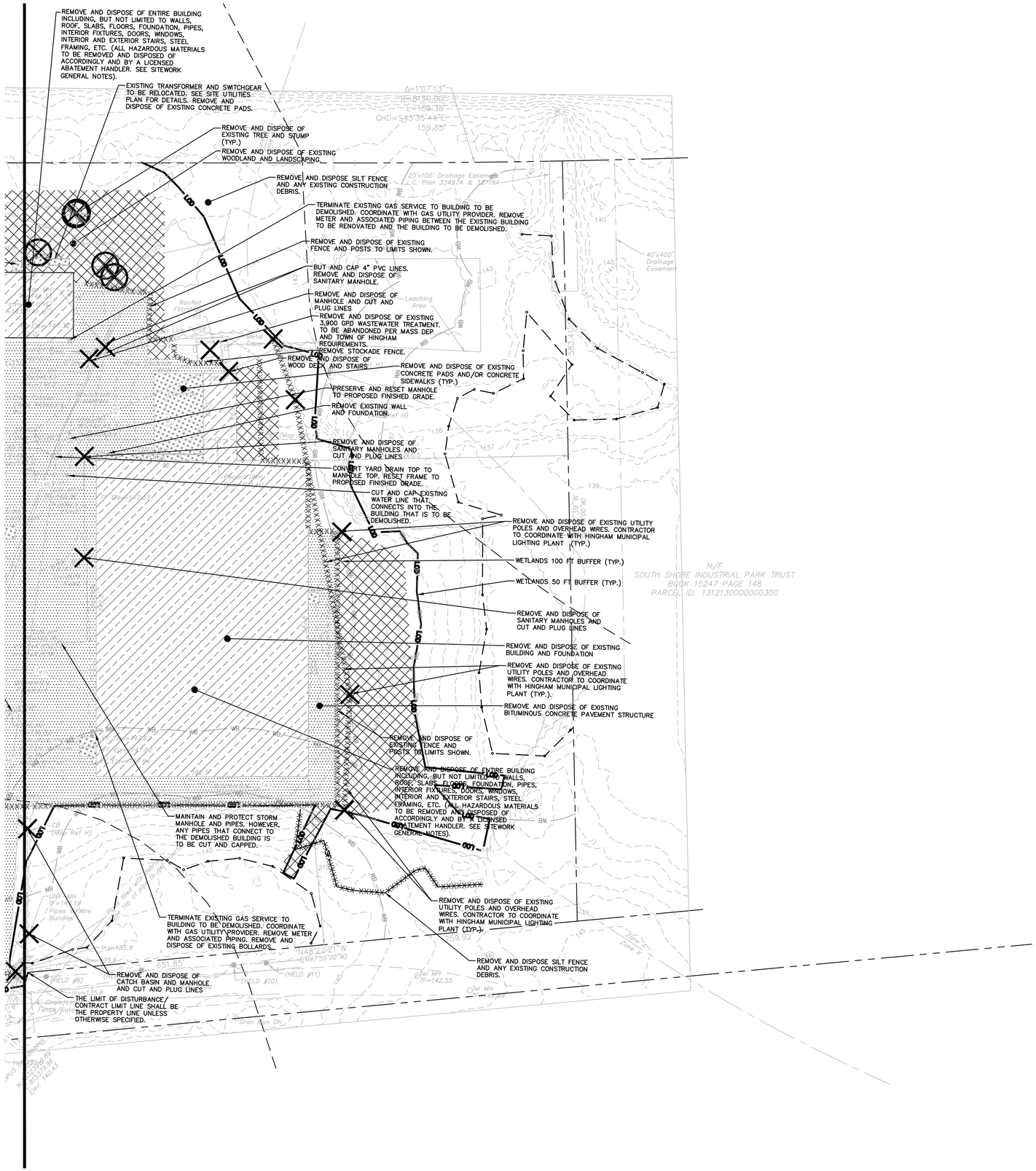

DEMOLITION LEGEND

— — —	PROPERTY LINE
—— LOD ——	LIMIT OF DISTURBANCE LINE AND CONTRACT LIMIT LINE
— — — — —	SAWCUT LINE
—— X ——	CONSTRUCTION CHAIN LINK FENCE
XXXXXXXXXXXXXXXXXXXX	REMOVE AND DISPOSE OF UNDERGROUND STORMWATER OR UTILITY PIPE, CURB, FENCING, WALLS, OVERHEAD WIRES, ETC.
X	REMOVE AND DISPOSE OF LIGHT POLE, SIGN, PIPING, UTILITY STRUCTURE, APPURTENANCE, FIXTURE, TREE, AND/OR TREE STUMP ETC.
	REMOVE AND DISPOSE OF TREE, SHRUB, AND/OR STUMP (TYP.)
S	EXISTING TREE/ SHRUBS TO REMAIN AND BE PROTECTED (TYP.)
	REMOVE AND DISPOSE OF EXISTING CONCRETE PADS AND/OR CONCRETE SIDEWALKS
	REMOVE AND DISPOSE OF EXISTING BITUMINOUS CONCRETE PAVEMENT STRUCTURE
	REMOVE AND DISPOSE OF EXISTING BUILDING AND FOUNDATION
	REMOVE AND DISPOSE OF EXISTING WOODLAND AND LANDSCAPED AREA
—— WB —— WB ——	50' AND 100' WETLAND BUFFERS

GRAPHIC SCALE
40 20 0 40
SCALE IN FEET

SEE SHEET GN-1 FOR SITEWORK GENERAL NOTES

FOR PERMITTING PURPOSES ONLY NOT RELEASED FOR CONSTRUCTION

Architecture
Engineering
Environmental
Land Surveying
BL Companies
355 Research Parkway
Meriden, CT 06450
(203) 630-1406
(203) 630-2615 Fax

COMMONWEALTH OF MASSACHUSETTS
ROBERT M. BOLES
CIVIL
No. 54812
REGISTERED PROFESSIONAL ENGINEER

PROPOSED DEVELOPMENT
100 INDUSTRIAL PARK ROAD
HINGHAM, MASSACHUSETTS

REVISIONS

No.	Date	Desc.
1.	05/12/2020	Revised per Staff and Commission Comments
2.	06/01/2020	Revised per Staff and Commission Comments
3.	07/10/2020	Revised per Planning and Peer Review Comments

Designed	A.T.K.
Drawn	A.T.K.
Reviewed	K.W.H.
Scale	1"=40'
Project No.	1901517
Date	03/06/2020
CAD File: DM190151701	

Title
DEMOLITION PLAN

Sheet No.
DM-2

Xref (s): : BD190151701 : XC190151701 : XL190151701 : XC190151703 : XE190151701 : XY190151701 : XC190151702

Jul 13, 2020-8:06pm akosse G:\JOBS1\P\LA\190151\DWG\DM\190151701.dwg
Layout: DM-2 XREFS: XC190151701 XL190151701 XW190151701 XD190151701 XE190151701 XC190151703 XY190151702 XC190151702 XR: 1:\Acad\Acad

© 2020 BL COMPANIES, INC. THESE DRAWINGS SHALL NOT BE UTILIZED BY ANY PERSON, FIRM OR CORPORATION WITHOUT THE SPECIFIC WRITTEN PERMISSION OF BL COMPANIES.

ZONING INFORMATION

LOCATION: HINGHAM				
ZONE: IP (INDUSTRIAL PARK) & S. HINGHAM DEVELOPMENT ZONING OVERLAY				
USE: WAREHOUSE (PERMITTED USE)				
ITEM #	ITEM	REQUIREMENTS	PROPOSED	WAIVER
1	MINIMUM LOT AREA	2 ACRES	±742,680 S.F. (±17.05 AC.)	NO
2	MINIMUM LOT WIDTH	NONE REQUIRED	±1,121 FEET	NO
3	MINIMUM LOT FRONTAGE	250 FEET	±1,557 FEET	NO
4	MINIMUM FRONT SETBACK	35 FEET	±251 FEET	NO
5	MINIMUM SIDE SETBACK	35 FEET	+35 FEET	NO
6	MINIMUM REAR SETBACK	50 FEET	±462 FEET	NO
7	MAXIMUM BUILDING HEIGHT	48 FEET / 4 STORIES (1)	±22 FEET	NO
8	MAXIMUM BUILDING COVERAGE	40 PERCENT/ FAR OF 0.35	20.1 PERCENT	NO

(1) BASED UPON SOUTH HINGHAM DEVELOPMENT OVERLAY.

PARKING INFORMATION

ITEM #	ITEM	REQUIREMENTS	PROPOSED	WAIVER
1	BUILDING SIZE	NONE REQUIRED	149,000 S.F.	NO
2	PARKING REQUIRED	OFFICE: 5 SPACE PER EVERY 1,000 S.F. OF GFA (10,216 S.F.) TOTAL REQUIRED = 52 WAREHOUSE: 1 SPACE PER EVERY 1,000 S.F. OF GFA (149,000 S.F.) TOTAL REQUIRED = 139	131 CAR SPACES 461 VAN SPACES	YES
3	MINIMUM HANDICAPPED PARKING SPACES REQUIRED	6 SPACES	6 SPACES	NO
4	PARKING DIMENSIONS	9 FEET X 18 FEET (WITH OVERHANG) 9 FEET X 20 FEET (WITHOUT OVERHANG)	9 x 20 FEET (AUTO SPACES) 11 FEET X 27 FEET (VAN SPACES)	YES
5	AISLE WIDTH	24 FEET – 2–WAY	24 FEET– 2–WAY (AUTO PARKING LOT) 30 FEET – 2–WAY (VAN PARKING LOT)	YES
6	MINIMUM FRONT SETBACK	15 FEET	±19 FEET	NO
7	MINIMUM SIDE SETBACK	NONE REQUIRED	±21 FEET	NO
8	MINIMUM REAR SETBACK	NONE REQUIRED	±200 FEET	NO
9	LOT AREA COVERAGE	A MINIMUM OF 15% OF THE AREA OF EACH LOT SHALL NOT BE BUILT UPON, PAVED OR PARKED UPON, AND SHALL BE MAINTAINED EITHER IN ITS NATURAL STATE OR LANDSCAPED	246,573 SF UNPAVED AREA (LANDSCAPED AND NATURAL)/742,680 SF LOT AREA = 33.2%	NO

SPECIAL REQUIREMENTS:
* ALONG ENTIRE STREET FRONTAGE, A 15 FT GREEN OR LANDSCAPED STRIP SHALL BE MAINTAINED.

LEGEND

- TRAFFIC FLOW DIRECTION
- EXISTING PARCEL BOUNDARY
- PARKING SETBACK PER HINGHAM ZONING BYLAWS
- BUILDING SETBACK PER HINGHAM ZONING BYLAWS
- WETLAND BOUNDARY
- WB — 50' AND 100' WETLAND BUFFERS
- FLOODPLAIN ZONE A BOUNDARY
- LOD — LIMIT OF DISTUBANCE
- PROPOSED GUIDE RAIL
- PROPOSED CONCRETE CURB
- ZONE A SURFACE WATER SUPPLY PROTECTION AREA BOUNDARY FROM MASSGIS DATA
- HEAVY DUTY BITUMINOUS CONCRETE PAVEMENT STRUCTURE
- STANDARD DUTY BITUMINOUS CONCRETE PAVEMENT STRUCTURE
- CONCRETE PAVEMENT

GENERAL NOTES

1. SITE IS HAS AN ACTIVITY AND USE LIMITATION (AUL) OVER THE FULL PROPERTY. A SOIL MANAGEMENT PLAN WILL BE REQUIRED FOR EXCAVATION.

WETLAND BUFFER ENCROACHMENTS

CONDITION	0–50' WETLAND BUFFER	50'–100' WETLAND BUFFER
EXISTING	±4,465 S.F.	±22,812 S.F.
PROPOSED	±4,585 S.F. (120 S.F. INCREASE FOR TWO NEW DISCHARGE LOCATIONS WITH SCOUR HOLES)	±32,743 S.F. (9,931 S.F. INCREASE FOR THE CONSTRUCTED STORMWATER WETLAND TREATMENT POND)
TEMPORARY	±1,247 S.F. (FOR INSTALLATION OF DISCHARGE PIPES, SURFACE TO BE RESORTED ONCE TRENCH HAS BEEN BACKFILLED)	±6,298 S.F. (FOR ADDITIONAL TREE PLANTINGS BY THE PROPOSED STORMWATER WETLAND TREATMENT POND)

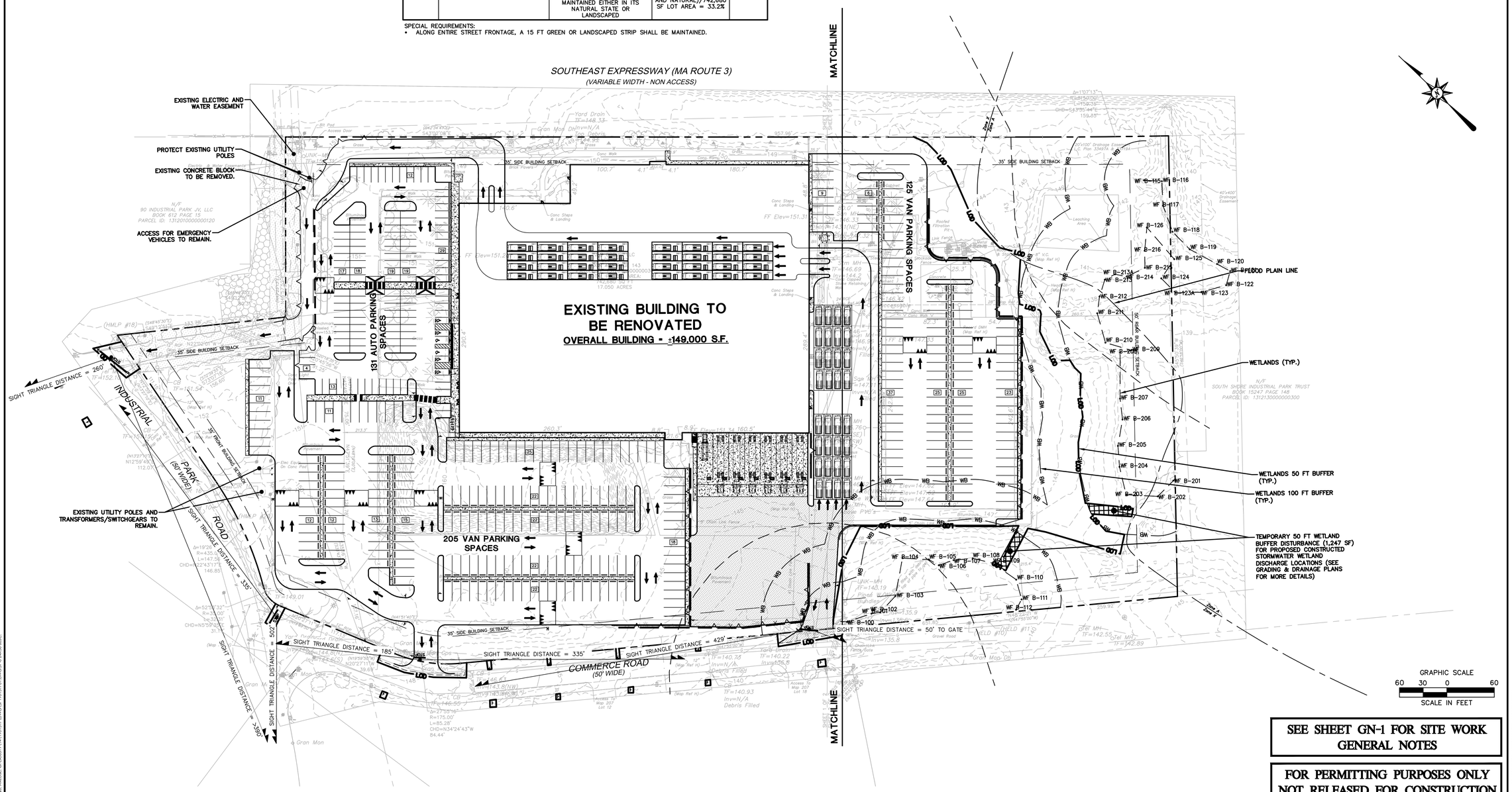

SEE SHEET GN-1 FOR SITE WORK GENERAL NOTES

FOR PERMITTING PURPOSES ONLY
NOT RELEASED FOR CONSTRUCTION

Architecture Engineering Environmental Land Surveying
BL Companies
355 Research Parkway
Meriden, CT 06450
(203) 630-1406
(203) 630-2615 Fax

COMMONWEALTH OF MASSACHUSETTS ROBERT M. BOLER CIVIL No. 54612 REGISTERED PROFESSIONAL ENGINEER

PROPOSED DEVELOPMENT
100 INDUSTRIAL PARK ROAD
HINGHAM, MASSACHUSETTS

REVISIONS

No.	Date	Desc.
1.	05/12/2020	Revised per Staff and Commission Comments
2.	06/01/2020	Revised per Staff and Commission Comments
3.	07/13/2020	Revised per Planning and Peer Review Comments

Designed	P.G.M.
Drawn	P.G.M.
Reviewed	K.W.H.
Scale	1"=60'
Project No.	1901517
Date	03/06/2020
CAD File: SP190151701	

Title
OVERALL SITE PLAN

Sheet No.
SP-0

Xref (s): : BD190151701 : XC190151701

Jul 13, 2020 8:06am ratosa G:\JOBS19\1A\190151701\DWG\SP190151701.dwg
Layout: SP-0 Model: BD190151701\DWG\SP190151701.DWG\SP-0 ANSI-D 48X32

© 2020 BL COMPANIES, INC. THESE DRAWINGS SHALL NOT BE UTILIZED BY ANY PERSON, FIRM OR CORPORATION WITHOUT THE SPECIFIC WRITTEN PERMISSION OF BL COMPANIES.

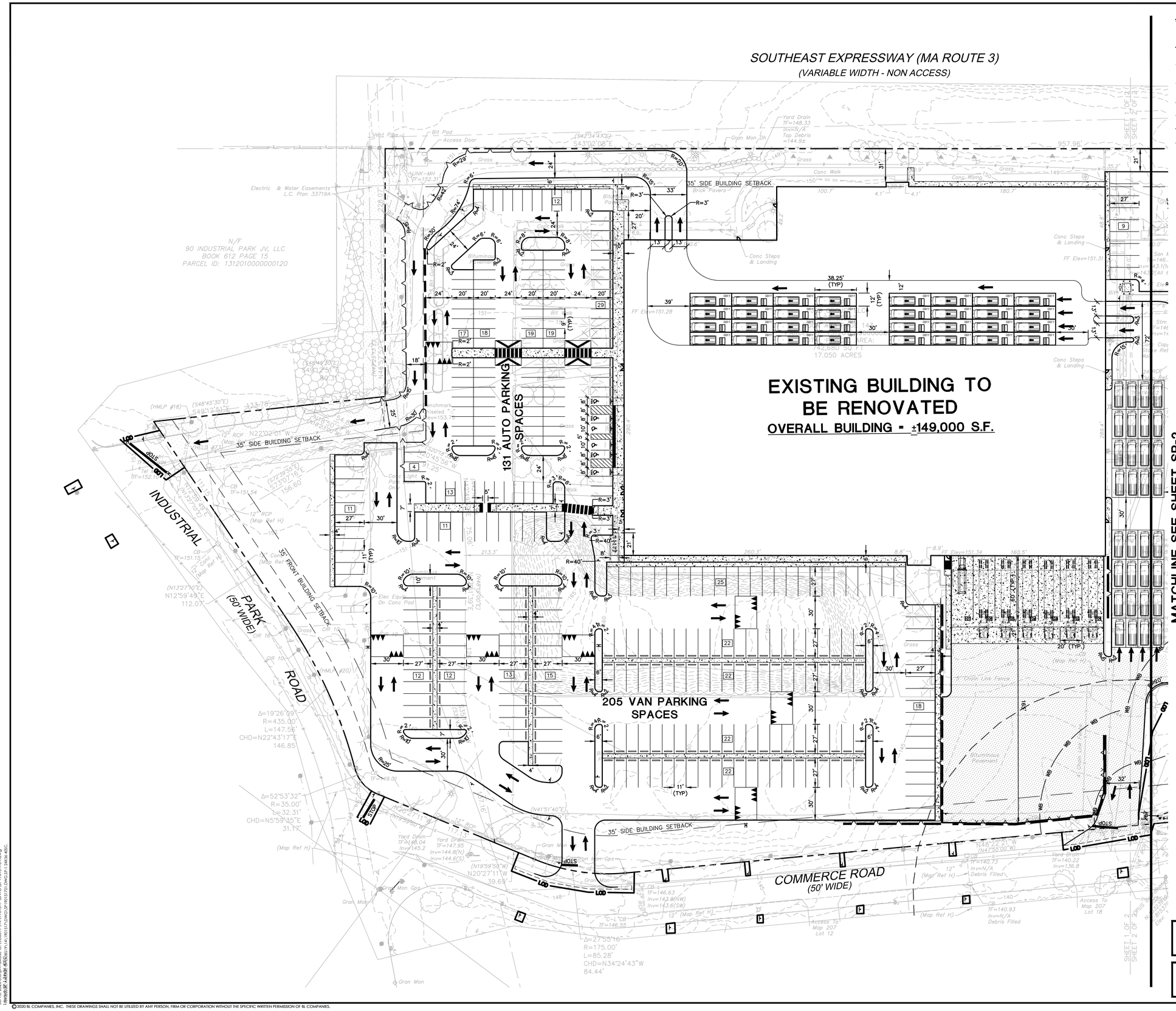

LEGEND

- TRAFFIC FLOW DIRECTION
- EXISTING PARCEL BOUNDARY
- PARKING SETBACK PER HINGHAM ZONING BYLAWS
- BUILDING SETBACK PER HINGHAM ZONING BYLAWS
- WETLAND BOUNDARY
- WB — 50' AND 100' WETLAND BUFFERS
- FLOODPLAIN ZONE A BOUNDARY
- LOD — LIMIT OF DISTUBANCE
- HEAVY DUTY BITUMINOUS CONCRETE PAVEMENT STRUCTURE
- STANDARD DUTY BITUMINOUS CONCRETE PAVEMENT STRUCTURE
- CONCRETE PAVEMENT

GRAPHIC SCALE
40 20 0 40
SCALE IN FEET

SEE SHEET GN-1 FOR SITE WORK GENERAL NOTES

FOR PERMITTING PURPOSES ONLY NOT RELEASED FOR CONSTRUCTION

Architecture Engineering Environmental Land Surveying
BL Companies
355 Research Parkway
Meriden, CT 06450
(203) 630-1406
(203) 630-2615 Fax

COMMONWEALTH OF MASSACHUSETTS ROBERT M. BOLER CIVIL No. 54612 REGISTERED PROFESSIONAL ENGINEER

PROPOSED DEVELOPMENT
100 INDUSTRIAL PARK ROAD
HINGHAM, MASSACHUSETTS

REVISIONS

No.	Date	Desc.
1.	05/12/2020	Revised per Staff and Commission Comments
2.	06/01/2020	Revised per Staff and Commission Comments

Designed	P.G.M.
Drawn	P.G.M.
Reviewed	K.W.H.
Scale	1"=40'
Project No.	1901517
Date	03/06/2020
CAD File: SP190151701	

Title
SITE PLAN

Sheet No.
SP-1

Xref (s): : BD190151701 : XY190151701 : XC190151701

Jul 13, 2020 8:07am cstose G:\JOBS\P\1A\190151710\DWG\SP190151701.dwg
Layout: SP-1 Model: 40Scale: 1Pc:1A\190151710\DWG\SP190151701.DWG,SP-1,24x36.pc3

© 2020 BL COMPANIES, INC. THESE DRAWINGS SHALL NOT BE UTILIZED BY ANY PERSON, FIRM OR CORPORATION WITHOUT THE SPECIFIC WRITTEN PERMISSION OF BL COMPANIES.

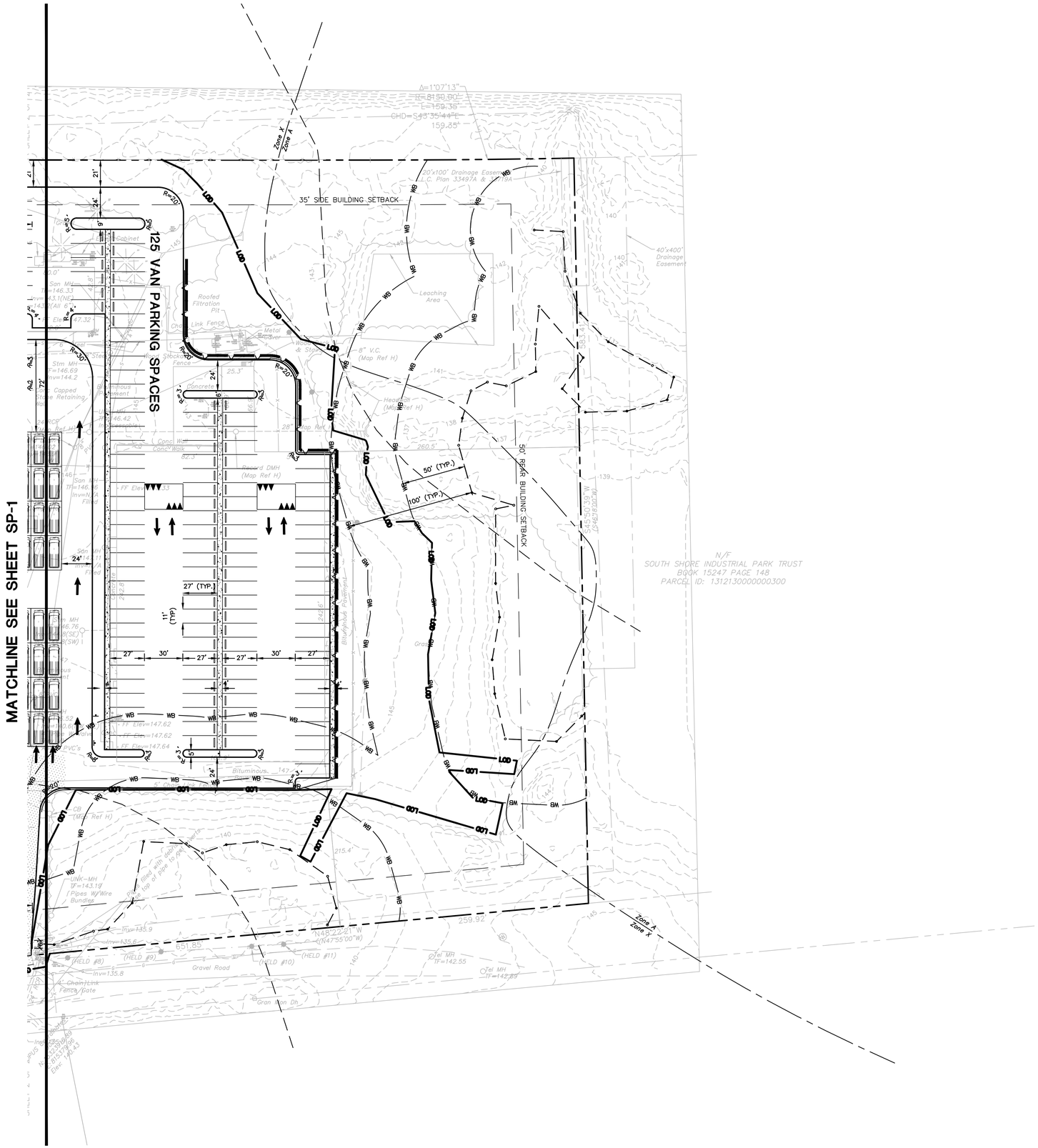

LEGEND

- TRAFFIC FLOW DIRECTION
- EXISTING PARCEL BOUNDARY
- PARKING SETBACK PER HINGHAM ZONING BYLAWS
- BUILDING SETBACK PER HINGHAM ZONING BYLAWS
- WETLAND BOUNDARY
- 50' AND 100' WETLAND BUFFERS
- FLOODPLAIN A BOUNDARY
- ZONE A SURFACE WATER SUPPLY PROTECTION AREA BOUNDARY FROM MASSGIS DATA
- HEAVY DUTY BITUMINOUS CONCRETE PAVEMENT STRUCTURE
- STANDARD DUTY BITUMINOUS CONCRETE PAVEMENT STRUCTURE
- CONCRETE PAVEMENT

GRAPHIC SCALE
40 20 0 40
SCALE IN FEET

SEE SHEET GN-1 FOR SITE WORK GENERAL NOTES

FOR PERMITTING PURPOSES ONLY NOT RELEASED FOR CONSTRUCTION

Architecture
Engineering
Environmental
Land Surveying

BL Companies

355 Research Parkway
Meriden, CT 06450
(203) 630-1406
(203) 630-2615 Fax

COMMONWEALTH OF MASSACHUSETTS
ROBERT M. POLIR
CIVIL
No. 54612
REGISTERED PROFESSIONAL ENGINEER

PROPOSED DEVELOPMENT

100 INDUSTRIAL PARK ROAD
HINGHAM, MASSACHUSETTS

REVISIONS

No.	Date	Desc.
1.	05/12/2020	Revised per Staff and Commission Comments
2.	06/01/2020	Revised per Staff and Commission Comments

Designed	P.G.M.
Drawn	P.G.M.
Reviewed	K.W.H.
Scale	1"=40'
Project No.	1901517
Date	03/06/2020
CAD File: SP190151701	

Title

SITE PLAN

Sheet No.

SP-2

Xref (s): : BD190151701 ; XV190151701 ; XC190151701

Jul 13, 2020 8:07pm cstose G:\JOBS\P\LA\190151701\DWG\SP190151701.dwg
Layout: SP-2 Model: 40Scale: 1"=40' G:\JOBS\P\LA\190151701\DWG\SP190151701.DWG\SP-2-2.40.lis ASTC

© 2020 BL COMPANIES, INC. THESE DRAWINGS SHALL NOT BE UTILIZED BY ANY PERSON, FIRM OR CORPORATION WITHOUT THE SPECIFIC WRITTEN PERMISSION OF BL COMPANIES.

LEGEND

- TRAFFIC FLOW DIRECTION
- EXISTING PARCEL BOUNDARY
- PARKING SETBACK PER HINGHAM ZONING BYLAWS
- BUILDING SETBACK PER HINGHAM ZONING BYLAWS
- WETLAND BOUNDARY
- WB — 50' AND 100' WETLAND BUFFERS
- FLOODPLAIN A BOUNDARY
- LOD — LIMIT OF DISTUBANCE
- PROPOSED GUIDE RAIL
- PROPOSED CONCRETE CURB
- ZONE A SURFACE WATER SUPPLY PROTECTION AREA BOUNDARY FROM MASSGIS DATA
- HEAVY DUTY BITUMINOUS CONCRETE PAVEMENT STRUCTURE
- STANDARD DUTY BITUMINOUS CONCRETE PAVEMENT STRUCTURE
- CONCRETE PAVEMENT

GENERAL NOTES

1. ALL SIGNS AND PAVEMENT MARKINGS TO BE INSTALLED WITHIN THE PROJECT SITE SHALL CONFORM TO THE APPLICABLE SPECIFICATIONS OF THE MANUAL ON UNIFORM TRAFFIC CONTROL DEVICES (MUTCD).
2. SIGNS, LANDSCAPING, AND OTHER FEATURES LOCATED WITHIN SIGHT TRIANGLE AREAS SHALL BE DESIGNED, INSTALLED, AND MAINTAINED SO AS NOT TO EXCEED 2.5 FEET IN HEIGHT. SNOW WINDROWS LOCATED WITHIN SIGHT TRIANGLE AREAS THAT EXCEED 3.5 FEET IN HEIGHT OR THAT WOULD OTHERWSE INHIBIT SIGHT LINES SHALL BE PROMPTLY REMOVED.

KEYNOTE LEGEND

A	INSTALL 4" WIDE WHITE STRIPE (TYP.)
B	INSTALL 4" WIDE ORANGE WARNING LINE (TYP.)
C	INSTALL 24" HIGH 3 DIGIT NUMBER MARKINGS AT DOCK SPACES (TYP.)
D	4" SOLID WHITE LINE STRIPED PAVEMENT MARKINGS (@ 45°, SPACED 4' O.C., TYP.)
E	INSTALL S-1 SIGN
G	INSTALL S-2 SIGN
H	INSTALL S-3 SIGN
I	INSTALL S-6 SIGN
J	INSTALL S-7 SIGN
K	INSTALL S-8 SIGN
L	INSTALL S-14 SIGN
M	INSTALL S-15 SIGN
N	INSTALL S-16 SIGN
O	INSTALL AS-26 SIGN. VERIFY LOCATION AND MOUNTING METHOD WITH TENANT'S REPRESENTATIVE PRIOR TO INSTALLATION.
P	4" SOLID BLUE LINE STRIPED PAVEMENT MARKINGS (@ 45°, SPACED 4' O.C., TYP.)
Q	INSTALL PAVEMENT DIRECTION ARROWS (TYP.)
R	INSTALL 12" WIDE VEHICLE STOP LINE
S	TYPICAL TRAILER PARKING AT DOCK (TYP.)
T	INSTALL AS-31 SIGN
U	INSTALL PG-17 SIGN
V	INSTALL PG-18 SIGN
W	INSTALL CONCRETE WHEEL STOP (TYP.)
X	INSTALL BITUMINOUS CONCRETE SPEED HUMP (TYP.)
Y	INSTALL 4" WIDE YELLOW STRIPE (TYP.)
Z	INSTALL R3-2 SIGN (NO LEFT TURN) (TYP.)
AA	INSTALL W2-2 SIGN (INTERSECTION WARNING SIGN) (TYP.)
AB	INSTALL W13-1P SIGN (20 MPH) (TYP.)
AC	INSTALL CONCRETE PEDESTRIAN TABLE WITH CROSSWALK PAVEMENT MARKING
AD	INSTALL S-5 SIGN
AE	INSTALL S-5A SIGN
AF	INSTALL 8' WIDE CROSSWALK PAVEMENT MARKING

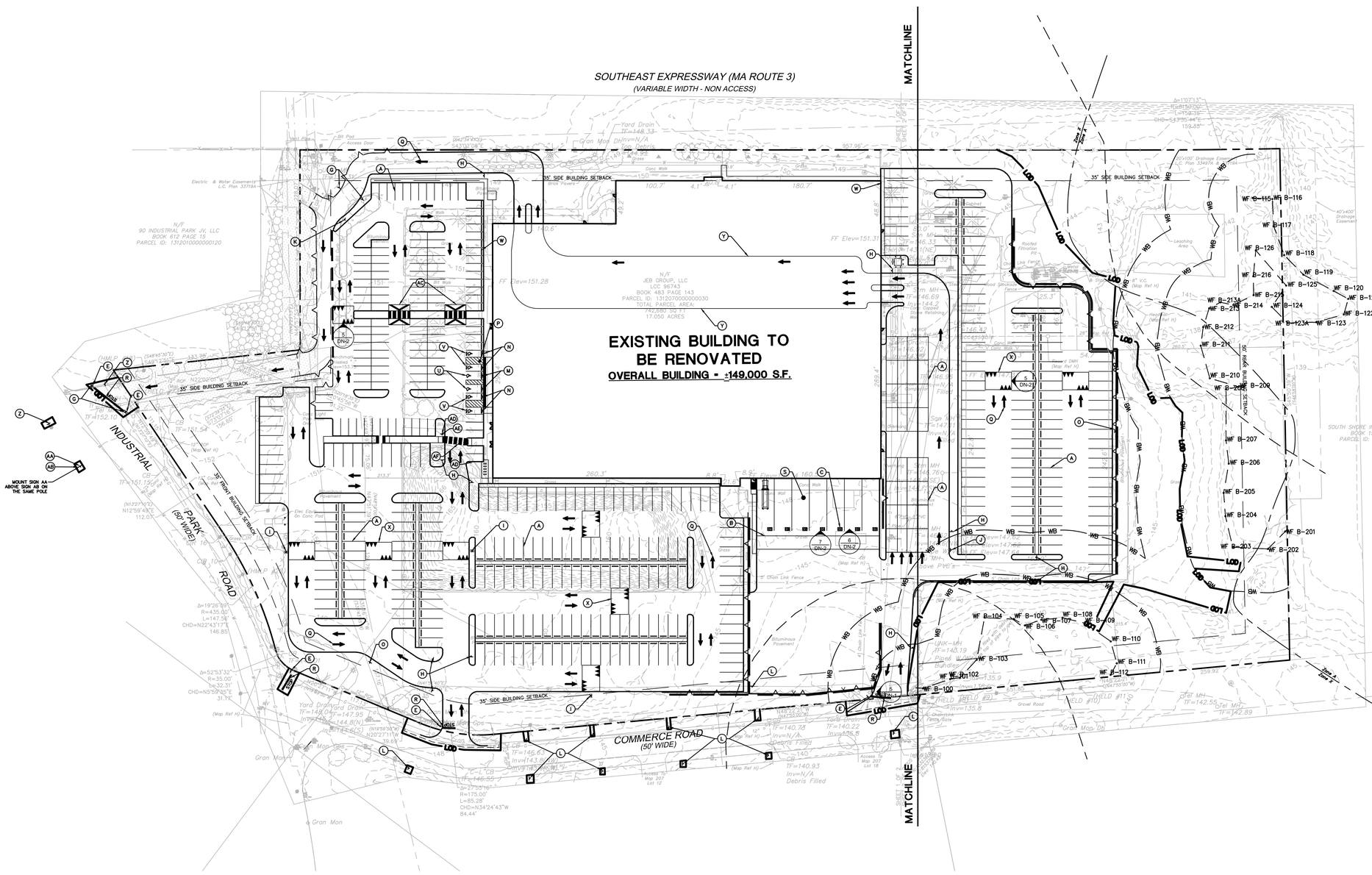

SEE SHEET GN-1 FOR SITE WORK GENERAL NOTES

FOR PERMITTING PURPOSES ONLY
NOT RELEASED FOR CONSTRUCTION

Architecture Engineering Environmental Land Surveying
BL Companies
355 Research Parkway
Meriden, CT 06450
(203) 630-1406
(203) 630-2615 Fax

COMMONWEALTH OF MASSACHUSETTS ROBERT M. BOLER CIVIL No. 54612 REGISTERED PROFESSIONAL ENGINEER

PROPOSED DEVELOPMENT
100 INDUSTRIAL PARK ROAD
HINGHAM, MASSACHUSETTS

REVISIONS

No.	Date	Desc.
1.	05/12/2020	Revised per Staff and Commission Comments
2.	06/01/2020	Revised per Staff and Commission Comments
3.	07/13/2020	Revised per Planning and Peer Review Comments

Designed	P.G.M.
Drawn	P.G.M.
Reviewed	K.W.H.
Scale	1"=60'
Project No.	1901517
Date	03/06/2020
CAD File: SP190151701	

Title

SITE SIGNAGE AND PAVEMENT MARKING PLAN

Sheet No.

SP-3

Xref (s): : BD190151701 ; XC190151701

Jul 13, 2020 8:07pm aklose G:\JOBS\9\1A\190151701\DWG\SP190151701.dwg
Layout: SP-3 Model: aklose

© 2020 BL COMPANIES, INC. THESE DRAWINGS SHALL NOT BE UTILIZED BY ANY PERSON, FIRM OR CORPORATION WITHOUT THE SPECIFIC WRITTEN PERMISSION OF BL COMPANIES.

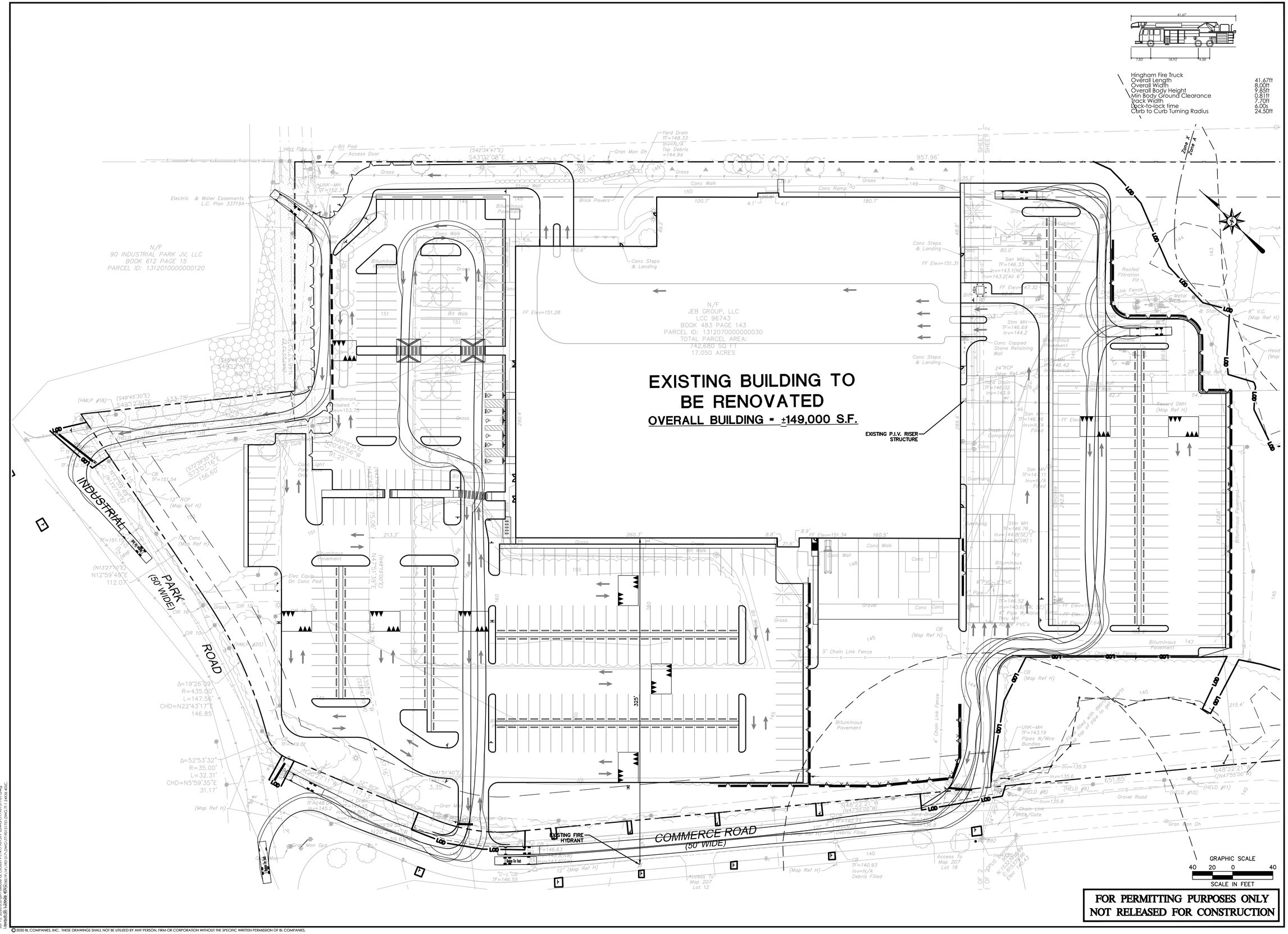

Architecture
Engineering
Environmental
Land Surveying

BL Companies

355 Research Parkway
Meriden, CT 06450
(203) 630-1406
(203) 630-2615 Fax

COMMONWEALTH OF MASSACHUSETTS
ROBERT M. ROLFE
CIVIL
No. 54612
REGISTERED PROFESSIONAL ENGINEER

PROPOSED DEVELOPMENT

100 INDUSTRIAL PARK ROAD
HINGHAM, MASSACHUSETTS

REVISIONS

No.	Date	Desc.

Designed	P.G.M.
Drawn	P.G.M.
Reviewed	K.W.H.
Scale	1"=40'
Project No.	1901517
Date	06/01/2020
CAD File: TT190151701	

Title

TRUCK TURNING PLAN

Sheet No.

TT-1

Xref (s): BD190151701, XV190151701, XC190151701

Jul 13, 2020 8:07pm mbolivar C:\JOBS\Y\Y-L\A190151701\DWGs\TT190151701.dwg
Layout: TT-1 Model: PROJECT-XV: V190151701XV0101 V190151701XC0101 PAPER-XREF

© 2020 BL COMPANIES, INC. THESE DRAWINGS SHALL NOT BE UTILIZED BY ANY PERSON, FIRM OR CORPORATION WITHOUT THE SPECIFIC WRITTEN PERMISSION OF BL COMPANIES.

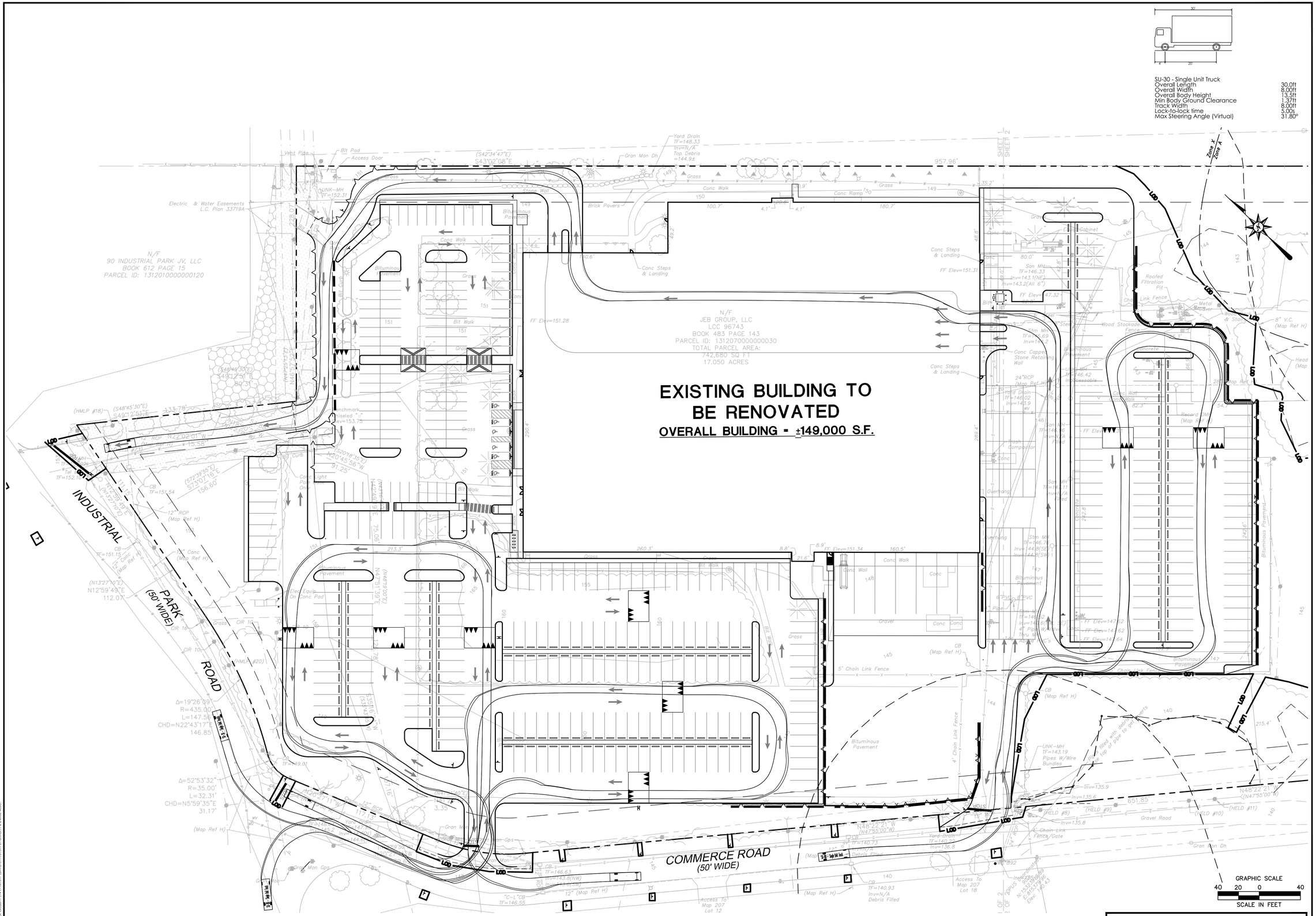

SU-30 - Single Unit Truck

Overall Length	30.0ft
Overall Width	8.00ft
Overall Body Height	13.5ft
Min Body Ground Clearance	1.37ft
Track Width	8.00ft
Lock-to-lock time	5.00s
Max Steering Angle (Virtual)	31.80°

Architecture
Engineering
Environmental
Land Surveying

BL Companies

355 Research Parkway
Meriden, CT 06450
(203) 630-1406
(203) 630-2615 Fax

COMMONWEALTH OF MASSACHUSETTS
ROBERT M. ROLES
CIVIL
No. 54612
REGISTERED PROFESSIONAL ENGINEER

PROPOSED DEVELOPMENT
100 INDUSTRIAL PARK ROAD
HINGHAM, MASSACHUSETTS

REVISIONS

No.	Date	Desc.

Designed	P.G.M.
Drawn	P.G.M.
Reviewed	K.W.H.
Scale	1"=40'
Project No.	1901517
Date	06/01/2020

CAD File: TT190151701

Title

TRUCK TURNING PLAN

Sheet No.

TT-2

© 2020 BL COMPANIES, INC. THESE DRAWINGS SHALL NOT BE UTILIZED BY ANY PERSON, FIRM OR CORPORATION WITHOUT THE SPECIFIC WRITTEN PERMISSION OF BL COMPANIES.

Jul 13, 2020-8:07am rdrouin G:\J2019\19141\19151701\DWG\TT190151701.dwg
Layout: TT-2 XREFS: XV190151701, XC190151701

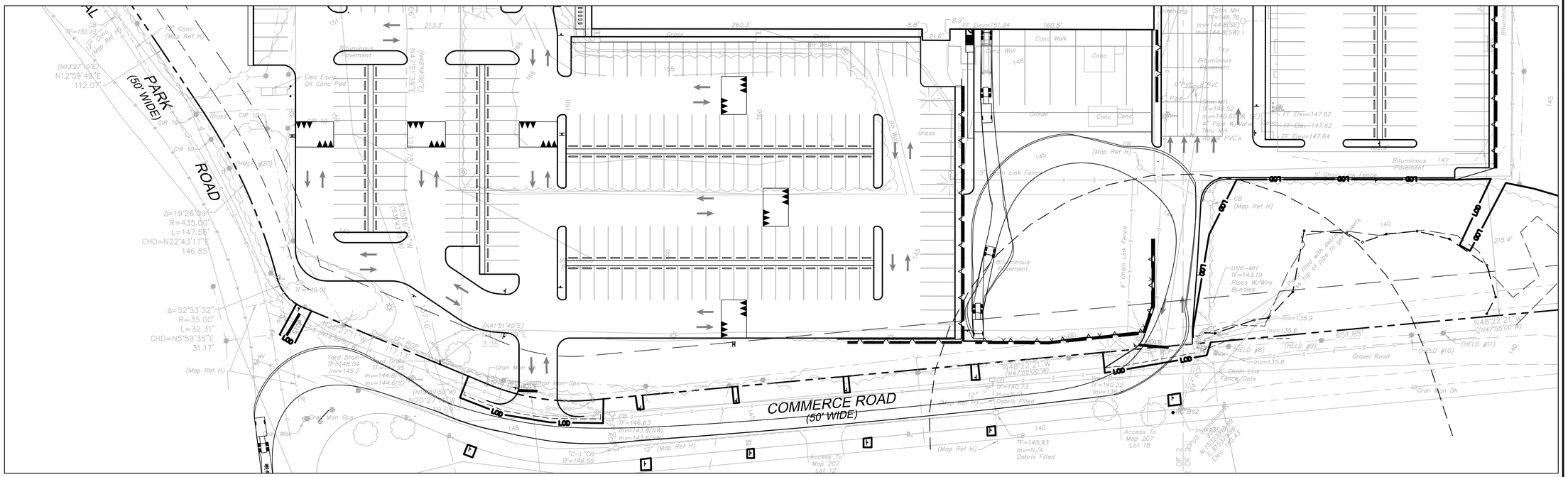

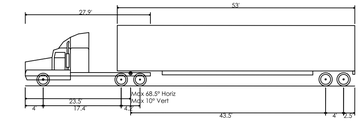

WB-67 - Interstate Semi-Trailer

Overall Length	73.5ft
Overall Width	8.50ft
Overall Body Height	13.5ft
Min Body Ground Clearance	1.33ft
Max Track Width	8.50ft
Lock-to-lock time	6.00s
Max Steering Angle (Virtual)	28.40°

FOR PERMITTING PURPOSES ONLY
NOT RELEASED FOR CONSTRUCTION

Architecture
Engineering
Environmental
Land Surveying

BL Companies

355 Research Parkway
Meriden, CT 06450
(203) 630-1406
(203) 630-2615 Fax

COMMONWEALTH OF MASSACHUSETTS
ROBERT M. BOLES JR.
No. 54612
REGISTERED PROFESSIONAL ENGINEER

PROPOSED DEVELOPMENT
100 INDUSTRIAL PARK ROAD
HINGHAM, MASSACHUSETTS

REVISIONS

No.	Date	Desc.

Designed	P.G.M.
Drawn	P.G.M.
Reviewed	K.W.H.
Scale	1"=40'
Project No.	1901517
Date	06/01/2020

CAD File: TT190151701

Title

TRUCK TURNING PLAN

Sheet No.

TT-3

Xref (s): BD190151701, XY190151701, XC190151701

Jul 13, 2020 8:07am mbolas G:\JOBS\1901\1901517\DWG\TT190151701.dwg
Layout: TT-3 Model: PROJECT XY: 190151 XC: 190151 DWG: TT190151701.DWG

© 2020 BL COMPANIES, INC. THESE DRAWINGS SHALL NOT BE UTILIZED BY ANY PERSON, FIRM OR CORPORATION WITHOUT THE SPECIFIC WRITTEN PERMISSION OF BL COMPANIES.

B-1 SURFACE EL.=149.0 BOTTOM EL.=138.5 GROUNDWATER TRAITS EL.=141

DEPTH (FT)	DESCRIPTION
0-0.25	ASPHALT: APPROXIMATELY 3.0-INCHES OF ASPHALT AND APPROXIMATELY 3-INCHES OF BASE COARSE.
0.25-0.5	FILL (S-1A): MEDIUM DENSE, BLACK TO BROWN, FINE TO MEDIUM SAND, LITTLE SILT, SEVERAL ASPHALT PARTICLES/FRAGMENTS. MOIST. [USDA CLASSIFICATION: SANDY LOAM].
0.5-2.5	GLACIAL DRIFT (S-1B): MEDIUM DENSE, BROWN, FINE TO COURSE SAND, SOME SILT, LITTLE FINE GRAVEL. [USDA CLASSIFICATION: SANDY LOAM].
2.5-4.5	GLACIAL DRIFT (S-2): MEDIUM DENSE, BROWN TO TAN, FINE SAND, SOME SILT. MOIST. FAINT REDOXIMORPHIC STAINING PRESENT. [USDA CLASSIFICATION: SANDY LOAM].
4.5-6.5	GLACIAL DRIFT (S-3): MEDIUM DENSE, TAN TO GRAY, FINE TO MEDIUM SAND, SOME SILT, VERY FEW ROOTS. MOIST. VERY FAINT REDOXIMORPHIC STAINING PRESENT. [USDA CLASSIFICATION: SANDY LOAM].
6.5-8.5	GLACIAL DRIFT (S-4): MEDIUM DENSE, GRAY TO ORANGISH-BROWN, FINE SAND, SOME SILT. MOIST TO WET. SEVERAL REDOXIMORPHIC STAINING POCKETS PRESENT. [USDA CLASSIFICATION: SANDY LOAM].
8.5-10.5	GLACIAL DRIFT (S-5): MEDIUM DENSE, GRAY TO BROWN, FINE SAND, SOME SILT. WET. FEW REDOXIMORPHIC STAINING POCKETS PRESENT. [USDA CLASSIFICATION: SANDY LOAM].

B-2 SURFACE EL.=142.0 BOTTOM EL.=133.5 GROUNDWATER TRAITS EL.=139.5

DEPTH (FT)	DESCRIPTION
0-0.4	ASPHALT: APPROXIMATELY 5.0-INCHES OF ASPHALT AND APPROXIMATELY 6-INCHES OF BASE COARSE.
0.4-1.5	FILL (S-1A): MEDIUM DENSE, BROWN TO GRAY, FINE TO COARSE SAND AND FINE GRAVEL, TRACE SILT. MOIST. [USDA CLASSIFICATION: VERY GRAVELLY SAND].
1.5-2.5	GLACIAL DRIFT (S-1B): MEDIUM DENSE, BROWN TO DARK GRAY, SILT, SOME FINE TO MEDIUM SAND. MOIST. [USDA CLASSIFICATION: SILT LOAM].
2.5-3.0	GLACIAL DRIFT (S-2A): MEDIUM DENSE, DARK BROWN TO GRAY, SILT, SOME FINE TO MEDIUM SAND, VERY FEW ROOTS AND ORGANIC FIBERS. MOIST TO WET. [USDA CLASSIFICATION: SILT LOAM].
3.0-4.5	GLACIAL DRIFT (S-2B): MEDIUM DENSE, BLUISH-GRAY, FINE TO COARSE SAND, SOME SILT. WET. [USDA CLASSIFICATION: SANDY LOAM].
4.5-6.5	GLACIAL DRIFT (S-3): DENSE, BROWN TO GRAY, FINE TO MEDIUM SAND AND SILT. WET. SEVERAL REDOXIMORPHIC STAINING POCKETS PRESENT. [USDA CLASSIFICATION: SANDY LOAM].
6.5-8.5	GLACIAL DRIFT (S-4): MEDIUM DENSE, TAN TO ORANGISH-BROWN, SILT AND FINE TO MEDIUM SAND, TRACE CLAY. WET. SEVERAL REDOXIMORPHIC STAINING POCKETS PRESENT. [USDA CLASSIFICATION: SILT LOAM].

B-3 SURFACE EL.=150.0 BOTTOM EL.=143.7 GROUNDWATER TRAITS EL.=145.0

DEPTH (FT)	DESCRIPTION
0-0.2	ASPHALT: APPROXIMATELY 2.0-INCHES OF ASPHALT AND APPROXIMATELY 2-INCHES OF BASE COARSE.
0.2-1.5	FILL (S-1A): MEDIUM DENSE, BROWN, FINE TO COARSE SAND, TRACE SILT, VERY FEW ASPHALT PARTICLES/FRAGMENTS. MOIST. [USDA CLASSIFICATION: SANDY LOAM].
1.5-2.25	GLACIAL DRIFT (S-1B): MEDIUM DENSE, BROWN TO ORANGISH-BROWN, FINE TO COARSE SAND AND SILT, TRACE FINE GRAVEL. MOIST. END OF SPLIT SPOON SAMPLE PRESENT WITH REDOXIMORPHIC STAINING. [USDA CLASSIFICATION: SANDY LOAM].
2.25-4.5	GLACIAL DRIFT (S-2): S-2: MEDIUM DENSE, BROWN TO PINK TO GRAY, SILT AND FINE TO COARSE SAND, LITTLE FINE GRAVEL. MOIST. WEATHERED BEDROCK FRAGMENTS PRESENT IN SOIL CUTTINGS AND TIP OF SPLIT-SPOON. [USDA CLASSIFICATION: SILT LOAM].
4.5-6.3	WEATHERED BEDROCK (S-3): VERY DENSE, ORANGISH-BROWN TO PINK TO GRAY, WEATHERED BEDROCK PARTICLES/FRAGMENTS. MOIST TO WET. BORING TERMINATED AT 6.3 FEET ON AUGER REFUSAL.

B-4 SURFACE EL.=146.0 BOTTOM EL.=142.5 GROUNDWATER TRAITS EL.=NOT ENCOUNTERED

DEPTH (FT)	DESCRIPTION
0-0.2	ASPHALT: APPROXIMATELY 1.9-INCHES OF ASPHALT AND APPROXIMATELY 3-INCHES OF BASE COARSE.
0.2-0.5	FILL
0.5-2.5	GLACIAL DRIFT (S-1): MEDIUM DENSE, BROWN TO LIGHT GRAY, FINE TO COARSE SAND, SOME FINE TO COARSE GRAVEL, SOME SILT. MOIST. [USDA CLASSIFICATION: GRAVELLY SANDY LOAM].
2.5-3.3	GLACIAL DRIFT (S-2): VERY DENSE, BROWN TO WHITE, FINE TO COARSE SAND AND FINE GRAVEL, LITTLE SILT. MOIST. WEATHERED BEDROCK FRAGMENTS PRESENT IN SOIL CUTTINGS AND TIP OF SPLIT-SPOON. APPROXIMATELY 1200 PSI OF DOWNWARD PRESSURE PERFORMED AT 3.5 FEET BGS. [USDA CLASSIFICATION: VERY GRAVELLY SANDY LOAM].
3.3-3.5	WEATHERED BEDROCK (S-3): BORING TERMINATED AT 3.5 FEET ON AUGER REFUSAL.

B-5 SURFACE EL.=150.0 BOTTOM EL.=141.5 GROUNDWATER TRAITS EL.=143.5

DEPTH (FT)	DESCRIPTION
0-0.2	ASPHALT: APPROXIMATELY 1.8-INCHES OF ASPHALT AND APPROXIMATELY 3-INCHES OF BASE COARSE.
0.2-0.5	FILL
0.5-2.5	GLACIAL DRIFT (S-1): DENSE, BROWN, FINE TO COARSE SAND, SOME SILT, LITTLE FINE GRAVEL. MOIST. STRONG RESISTANCE WHEN ADVANCING AUGERS TO 2.5 FEET BGS. [USDA CLASSIFICATION: SANDY LOAM].
2.5-4.5	GLACIAL DRIFT (S-2): S-2: VERY DENSE, TAN TO LIGHT GRAY, FINE TO COARSE SAND AND SILT, SOME FINE TO COARSE GRAVEL. MOIST. FAINT REDOXIMORPHIC STAINING PRESENT. WEATHERED BEDROCK FRAGMENTS PRESENT IN SOIL CUTTINGS AND TIP OF SPLIT-SPOON. [USDA CLASSIFICATION: GRAELLY SANDY LOAM].
4.5-6.3	GLACIAL FILL (S-3): VERY DENSE, TAN TO LIGHT GRAY, FINE TO COARSE SAND AND FINE GRAVEL, LITTLE SILT. MOIST. WEATHERED BEDROCK FRAGMENTS PRESENT IN SOIL CUTTINGS AND TIP OF SPLIT-SPOON. [USDA CLASSIFICATION: VERY GRAVELLY SANDY LOAM].
6.5-8.5	GLACIAL FILL (S-4): DENSE, TAN TO LIGHT GRAY, FINE TO COARSE SAND, SOME SILT, LITTLE FINE GRAVEL. WET. FAINT REDOXIMORPHIC STAINING PRESENT. WEATHERED BEDROCK FRAGMENTS PRESENT IN SOIL CUTTINGS AND TIP OF SPLIT-SPOON. [USDA CLASSIFICATION: SANDY LOAM].

B-6 SURFACE EL.=145.0 BOTTOM EL.=136.0 GROUNDWATER TRAITS EL.=142.0

DEPTH (FT)	DESCRIPTION
0-0.5	ASPHALT: APPROXIMATELY 5.4-INCHES OF ASPHALT AND APPROXIMATELY 4-INCHES OF BASE COARSE.
1-3	FILL (S-1): MEDIUM DENSE, BROWN TO TAN, FINE TO MEDIUM SAND, SOME SILT. MOIST. [USDA CLASSIFICATION: SANDY LOAM].
3-5	FILL (S-2): MEDIUM DENSE, DARK BROWN TO TAN, FINE TO COARSE SAND, SOME FINE GRAVEL, SOME SILT. WET. VERY FAINT REDOXIMORPHIC STAINING PRESENT. [USDA CLASSIFICATION: SANDY LOAM].
5-7	GLACIAL DRIFT (S-3): VERY DENSE, GRAY, ONE PIECE OF COARSE GRAVEL PRESENT WITHIN SPLIT-SPOON SAMPLE.
7-9	GLACIAL FILL (S-4): MEDIUM DENSE, BROWN, FINE TO MEDIUM SAND, LITTLE FINE GRAVEL, LITTLE SILT, TRACE CLAY, FEW WOOD PARTICLES/FRAGMENTS, VERY FEW ROOTS. WET. VERY FAINT REDOXIMORPHIC STAINING PRESENT. [USDA CLASSIFICATION: SANDY LOAM].

B-7 SURFACE EL.=146.0 BOTTOM EL.=137.0 GROUNDWATER TRAITS EL.=141.5

DEPTH (FT)	DESCRIPTION
0-0.5	ASPHALT: APPROXIMATELY 5.6-INCHES OF ASPHALT AND APPROXIMATELY 3-INCHES OF BASE COARSE.
1-3	FILL (S-1): DENSE, BROWN TO DARK GRAY, FINE TO COARSE SAND AND FINE TO COARSE GRAVEL, LITTLE SILT, VERY FEW ASPHALT PARTICLES/FRAGMENTS. MOIST. [USDA CLASSIFICATION: VERY GRAVELLY SANDY LOAM
3-5	FILL (S-2): MEDIUM DENSE, BROWN TO DARK GRAY, FINE TO COARSE SAND, SOME SILT, LITTLE FINE GRAVEL, VERY FEW ASPHALT PARTICLES. MOIST TO WET. [USDA CLASSIFICATION: SANDY LOAM].
5-7	GLACIAL DRIFT (S-3): DENSE, DARK BROWN TO DARK GRAY, FINE TO COARSE GRAVEL AND FINE TO COARSE SAND, LITTLE SILT. WET. VERY FEW REDOXIMORPHIC STAINING POCKETS PRESENT. [USDA CLASSIFICATION: EXTREMELLY GRAVELLY SANDY LOAM].
7-9	GLACIAL FILL WITH ORGANICS (S-4): DENSE, DARK BROWN, ORGANIC SILT, SOME FINE TO COARSE SAND, TRACE FINE GRAVEL, TRACE CLAY, FEW WOOD PARTICLES/FRAGMENTS, VERY FEW ROOTS. WET. [USDA CLASSIFICATION: SILT LOAM].

B-8 SURFACE EL.=147.0 BOTTOM EL.=136.5 GROUNDWATER TRAITS EL.=140.2

DEPTH (FT)	DESCRIPTION
0-0.5	ASPHALT: APPROXIMATELY 3.5 TO 4.2-INCHES OF ASPHALT AND APPROXIMATELY 4-INCHES OF BASE COARSE.
0.5-2.5	FILL (S-1): S-1: MEDIUM DENSE, BROWN, FINE TO COARSE SAND, LITTLE SILT, TRACE FINE GRAVEL, VERY FEW BRICK AND ASPHALT PARTICLES/FRAGMENTS. MOIST. [USDA CLASSIFICATION: SANDY LOAM].
2.5-3.0	FILL (S-2A): MEDIUM DENSE, BROWN TO GRAY, FINE TO COARSE SAND, TRACE SILT, FEW ASPHALT PARTICLES. MOIST. [USDA CLASSIFICATION: SAND].
3.0-4.5	GLACIAL DRIFT (S-2B): MEDIUM DENSE, TAN TO GRAY, FINE TO MEDIUM SAND, TRACE SILT. MOIST. VERY FAINT REDOXIMORPHIC STAINING PRESENT. [USDA CLASSIFICATION: SAND
4.5-6.5	GLACIAL FILL (S-3): LOOSE TO MEDIUM DENSE, TAN, FINE TO MEDIUM SAND, TRACE SILT. MOIST TO WET. FEW REDOXIMORPHIC STAINING POCKETS PRESENT. [USDA CLASSIFICATION: SAND].
6.5-8.5	GLACIAL FILL (S-4): LOOSE, BROWN, FINE TO MEDIUM SAND, LITTLE SILT. WET. FEW REDOXIMORPHIC STAINING POCKETS PRESENT. [USDA CLASSIFICATION: LOAMY SAND].
8.5-10.5	GLACIAL FILL (S-5): LOOSE TO MEDIUM DENSE, BROWN, FINE TO MEDIUM SAND, LITTLE SILT. WET. FEW REDOXIMORPHIC STAINING POCKETS PRESENT. [USDA CLASSIFICATION: LOAMY SAND].

TP-7D SURFACE EL.=150.01 BOTTOM EL.=147.93 GROUNDWATER TRAITS EL.=NONE ENCOUNTERED

DEPTH (IN)	DESCRIPTION
0-3	PAVEMENT
3-25	SOIL HORIZON: FILL OTHER: FRACTURED LEDGE REFUSAL AT 25"

TP-9D SURFACE EL.=146.62 BOTTOM EL.=138.04 GROUNDWATER TRAITS EL.=138.62

DEPTH (IN)	DESCRIPTION
0-60	FILL
60-103	SOIL HORIZON: C SOIL TEXTURE: MEDIUM SAND SOIL COLOR: 2.5Y7/3 OTHER: LOOSE, SINGLE GRAIN, STRATIFIED, 5% GRAVEL, WEEPING AT 96" ESTIMATED SEASONAL HIGH GROUND WATER AT 96"

TP-8D SURFACE EL.=148.44 BOTTOM EL.=146.11 GROUNDWATER TRAITS EL.=NONE ENCOUNTERED

DEPTH (IN)	DESCRIPTION
0-3	PAVEMENT
3-28	SOIL HORIZON: FILL OTHER: FRACTURED LEDGE REFUSAL AT 28"

TP-10D SURFACE EL.=145.33 BOTTOM EL.=140.25 GROUNDWATER TRAITS EL.=NONE ENCOUNTERED

DEPTH (IN)	DESCRIPTION
0-61	FILL AND GRASS COVER REFUSAL AT 61"

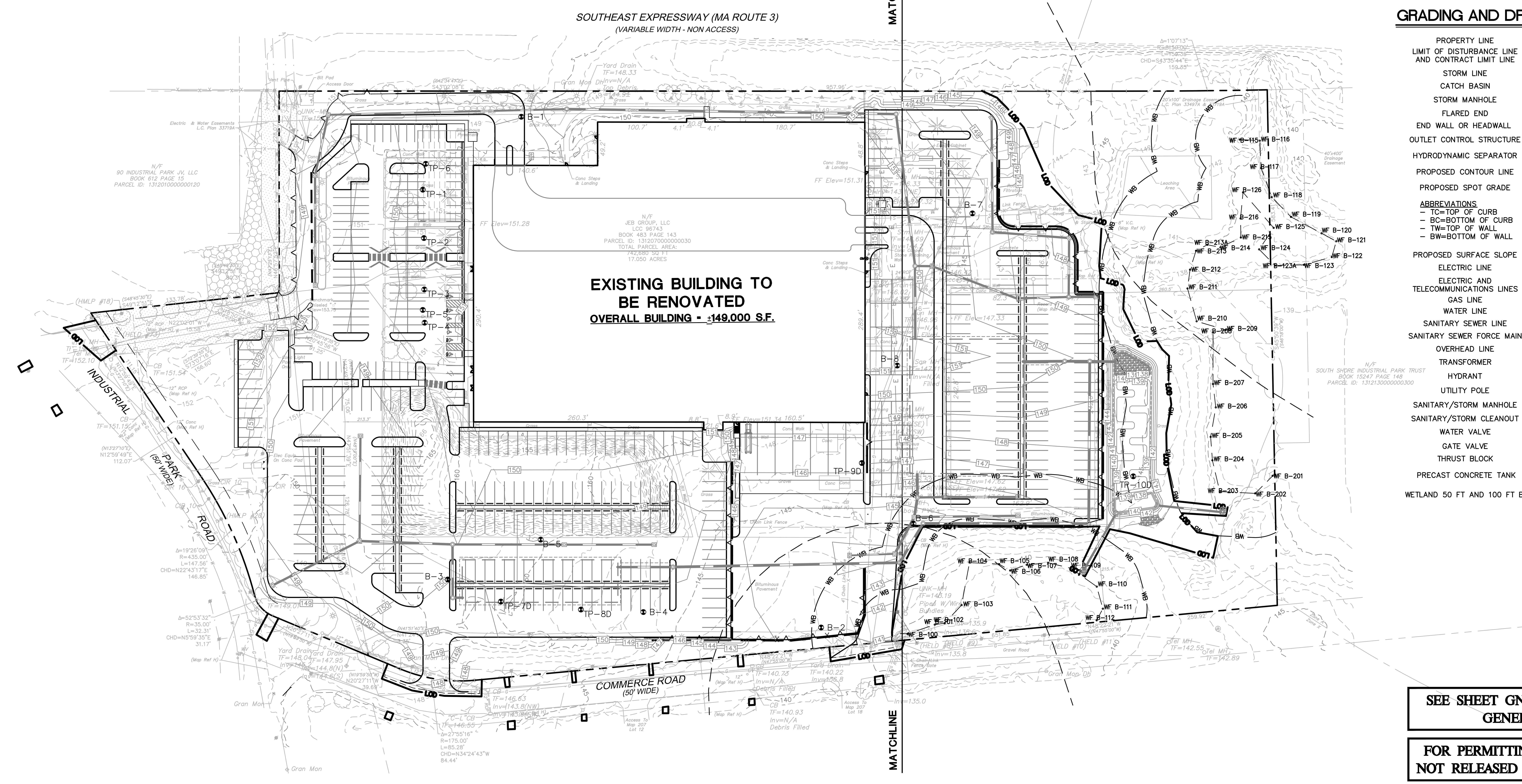

GRADING AND DRAINAGE LEGEND

PROPERTY LINE	
LIMIT OF DISTURBANCE LINE AND CONTRACT LIMIT LINE	LOD
STORM LINE	
CATCH BASIN	
STORM MANHOLE	
FLARED END	
END WALL OR HEADWALL	
OUTLET CONTROL STRUCTURE	
HYDRODYNAMIC SEPARATOR	
PROPOSED CONTOUR LINE	228
PROPOSED SPOT GRADE	x 100.00
ABBREVIATIONS - TC=TOP OF CURB - BC=BOTTOM OF CURB - TW=TOP OF WALL - BW=BOTTOM OF WALL	x TC=100.00 BC=99.50 x TW=108.00 BW=100.00
PROPOSED SURFACE SLOPE	2%
ELECTRIC LINE	E E
ELECTRIC AND TELECOMMUNICATIONS LINES	E/T
GAS LINE	G G
WATER LINE	W W
SANITARY SEWER LINE	S
SANITARY SEWER FORCE MAIN	SFM
OVERHEAD LINE	OH OH
TRANSFORMER	T
HYDRANT	
UTILITY POLE	
SANITARY/STORM MANHOLE	
SANITARY/STORM CLEANOUT	CO
WATER VALVE	WV
GATE VALVE	GV
THRUST BLOCK	
PRECAST CONCRETE TANK	
WETLAND 50 FT AND 100 FT BUFFERS	WB

GRAPHIC SCALE
60 30 0 60
SCALE IN FEET

SEE SHEET GN-1 FOR SITE WORK GENERAL NOTES

FOR PERMITTING PURPOSES ONLY NOT RELEASED FOR CONSTRUCTION

Architecture
Engineering
Environmental
Land Surveying
BL Companies
355 Research Parkway
Meriden, CT 06450
(203) 630-1406
(203) 630-2615 Fax

COMMONWEALTH OF MASSACHUSETTS ROBERT M. BOLES CIVIL No. 54612 REGISTERED PROFESSIONAL ENGINEER

PROPOSED DEVELOPMENT
100 INDUSTRIAL PARK ROAD
HINGHAM, MASSACHUSETTS

REVISIONS

No.	Date	Desc.
1.	05/12/2020	Revised per Staff and Commission Comments
2.	06/01/2020	Revised per Staff and Commission Comments
3.	07/13/2020	Revised per Planning and Peer Review Comments

Designed	A.T.K.
Drawn	A.T.K.
Reviewed	
Scale	1"=60'
Project No.	1901517
Date	03/06/2020
CAD File:	GD190151701

Title
OVERALL GRADING AND DRAINAGE PLAN

Sheet No.
GD-0

Xref (s): ; BD190151701 ; XY190151701 ; XC190151701 ; XL190151701 ; XC190151701 ; XC190151702 ; XC190151703 ; XE190151701 ; SU190151701

Jul 13, 2020 8:08pm aklose G:\JOBS19\14\1901517\DWG\GD190151701.dwg
Layout: GD-0 24X36 60SC

© 2020 BL COMPANIES, INC. THESE DRAWINGS SHALL NOT BE UTILIZED BY ANY PERSON, FIRM OR CORPORATION WITHOUT THE SPECIFIC WRITTEN PERMISSION OF BL COMPANIES.

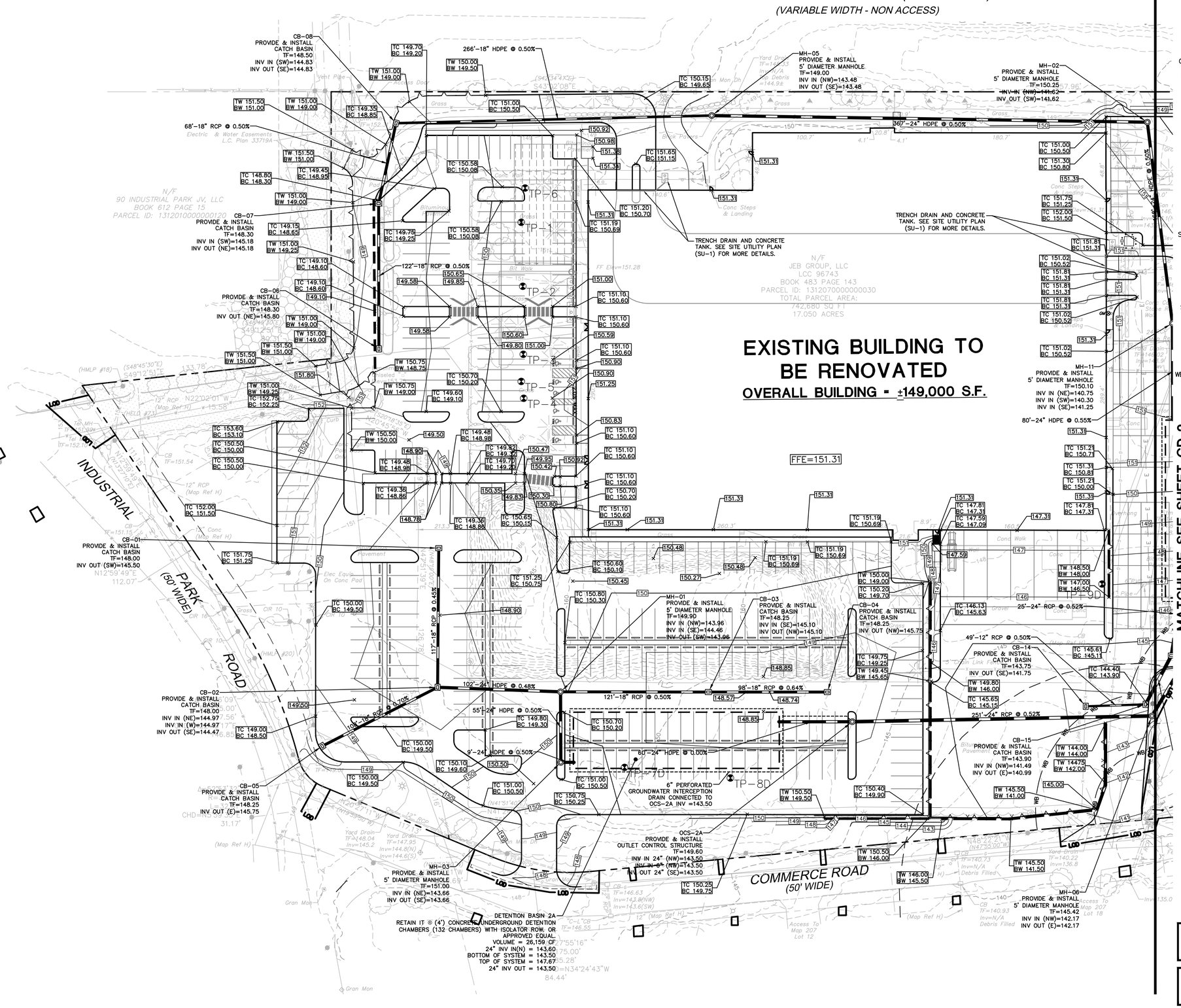

GRADING AND DRAINAGE LEGEND

PROPERTY LINE	
LIMIT OF DISTURBANCE LINE AND CONTRACT LIMIT LINE	LOD
STORM LINE	
CATCH BASIN	
STORM MANHOLE	
FLARED END	
END WALL OR HEADWALL	
OUTLET CONTROL STRUCTURE	
HYDRODYNAMIC SEPARATOR	
PROPOSED CONTOUR LINE	228
PROPOSED SPOT GRADE	x 100.00
ABBREVIATIONS – TC=TOP OF CURB – BC=BOTTOM OF CURB – TW=TOP OF WALL – BW=BOTTOM OF WALL	x TC=100.00 BC=99.50 / x TW=108.00 BW=100.00
PROPOSED SURFACE SLOPE	2%
ELECTRIC LINE	E E
ELECTRIC AND TELECOMMUNICATIONS LINES	E/T
GAS LINE	G G
WATER LINE	W W
SANITARY SEWER LINE	S
SANITARY SEWER FORCE MAIN	SFM
OVERHEAD LINE	OH OH
TRANSFORMER	T
HYDRANT	
UTILITY POLE	
SANITARY/STORM MANHOLE	
SANITARY/STORM CLEANOUT	CO
WATER VALVE	WV
GATE VALVE	GV
THRUST BLOCK	
PRECAST CONCRETE TANK	
WETLAND 50 FT AND 100 FT BUFFERS	WB

GRAPHIC SCALE
40 20 0 40
SCALE IN FEET

SEE SHEET GN-1 FOR SITE WORK GENERAL NOTES

FOR PERMITTING PURPOSES ONLY NOT RELEASED FOR CONSTRUCTION

Architecture Engineering Environmental Land Surveying
BL Companies
355 Research Parkway
Meriden, CT 06450
(203) 630-1406
(203) 630-2615 Fax

COMMONWEALTH OF MASSACHUSETTS ROBERT M. BOLES CIVIL No. 54612 REGISTERED PROFESSIONAL ENGINEER

PROPOSED DEVELOPMENT
100 INDUSTRIAL PARK ROAD
HINGHAM, MASSACHUSETTS

REVISIONS

No.	Date	Desc.
1.	05/12/2020	Revised per Staff and Commission Comments
2.	06/01/2020	Revised per Staff and Commission Comments
3.	07/13/2020	Revised per Planning and Peer Review Comments

Designed	A.T.K.
Drawn	A.T.K.
Reviewed	
Scale	1"=40'
Project No.	1901517
Date	03/06/2020
CAD File:	GD190151701

Title

GRADING AND DRAINAGE PLAN

Sheet No.

GD-1

Jul 13, 2020,8:06am aboue G:\JOBS\PN141901517\DWG\GD190151701.dwg
USERNAME=ABOUE,ROBERT A XREFS=XR190151701,XR190151702,XR190151703,XR190151704,XR190151705

© 2020 BL COMPANIES, INC. THESE DRAWINGS SHALL NOT BE UTILIZED BY ANY PERSON, FIRM OR CORPORATION WITHOUT THE SPECIFIC WRITTEN PERMISSION OF BL COMPANIES.

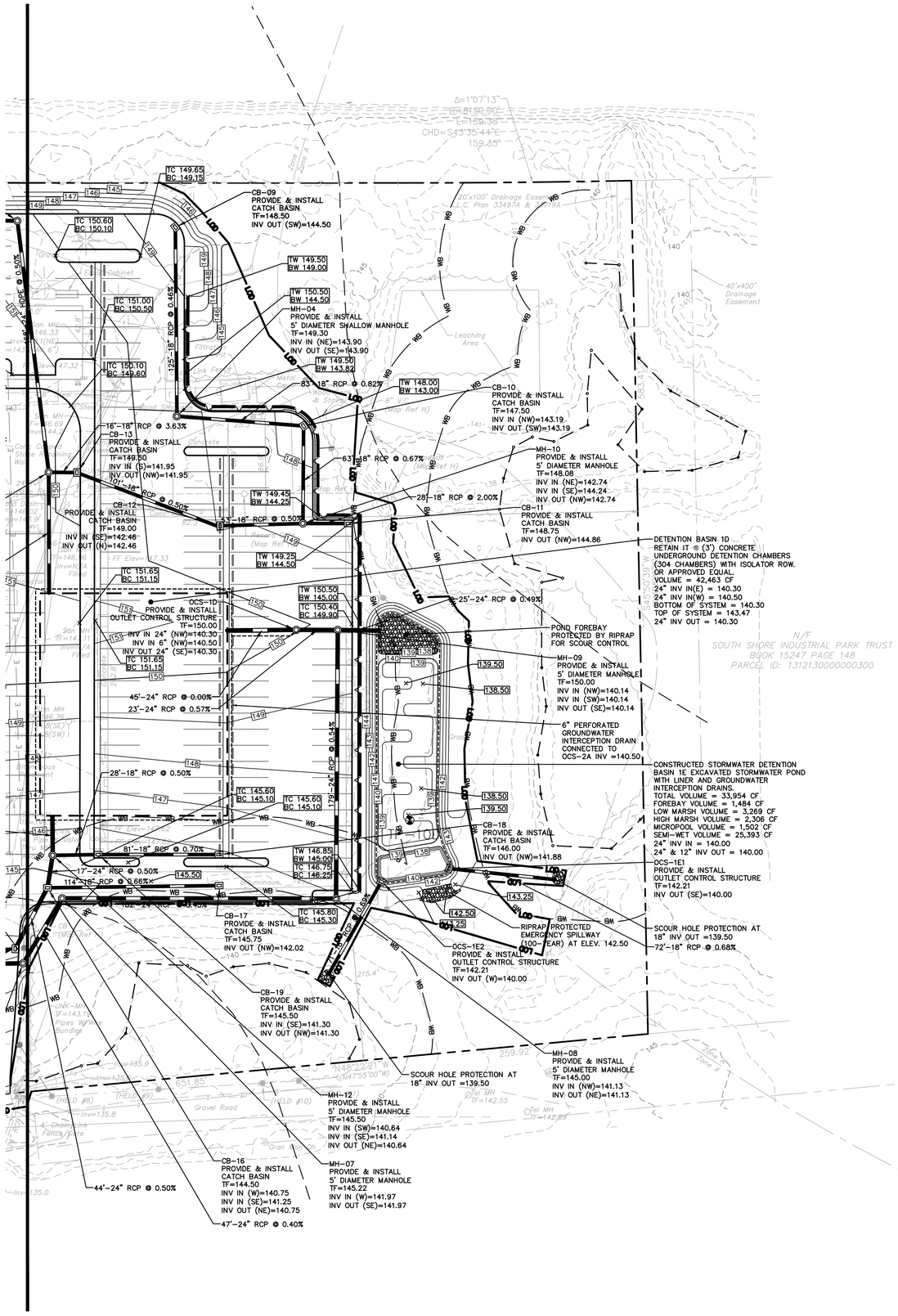

GRADING AND DRAINAGE LEGEND

PROPERTY LINE	
LIMIT OF DISTURBANCE LINE AND CONTRACT LIMIT LINE	LOD
STORM LINE	
CATCH BASIN	
STORM MANHOLE	
FLARED END	
END WALL OR HEADWALL	
OUTLET CONTROL STRUCTURE	
HYDRODYNAMIC SEPARATOR	
PROPOSED CONTOUR LINE	228
PROPOSED SPOT GRADE	x 100.00
ABBREVIATIONS – TC=TOP OF CURB – BC=BOTTOM OF CURB – TW=TOP OF WALL – BW=BOTTOM OF WALL	x TC=100.00 BC=99.50 x TW=108.00 BW=100.00
PROPOSED SURFACE SLOPE	2%
ELECTRIC LINE	E E
ELECTRIC AND TELECOMMUNICATIONS LINES	E/T
GAS LINE	G G
WATER LINE	W W
SANITARY SEWER LINE	S
SANITARY SEWER FORCE MAIN	SFM
OVERHEAD LINE	OH OH
TRANSFORMER	T
HYDRANT	
UTILITY POLE	
SANITARY/STORM MANHOLE	
SANITARY/STORM CLEANOUT	CO
WATER VALVE	WV
GATE VALVE	GV
THRUST BLOCK	
PRECAST CONCRETE TANK	
WETLAND 50 FT AND 100 FT BUFFERS	WB

NOTES:

1. IN REGARD TO THE CONSTRUCTED STORMWATER WETLAND; FROM 310 CMR: DEPARTMENT OF ENVIRONMENTAL PROTECTION, SECTION 10.02(2)(b)3.(c) "NOTWITHSTANDING THE PROVISIONS OF 310 CMR 10.02(1) AND (2)(A) AND (B), STORMWATER MANAGEMENT SYSTEMS DESIGNED, CONSTRUCTED, INSTALLED, OPERATED, MAINTAINED, AND/OR IMPROVED AS DEFINED IN 310 CMR 10.04 IN ACCORDANCE WITH THE STORMWATER MANAGEMENT STANDARDS AS PROVIDED IN THE STORMWATER MANAGEMENT POLICY (1996) OR 310 CMR 10.05(6)(K) THROUGH (Q) DO NOT BY THEMSELVES CONSTITUTE AREAS SUBJECT TO PROTECTION UNDER M.G.L. C. 131, § 40 OR BUFFER ZONE PROVIDED THAT:
   1. THE SYSTEM WAS DESIGNED, CONSTRUCTED, INSTALLED, AND/OR IMPROVED AS DEFINED IN 310 CMR 10.04 ON OR AFTER NOVEMBER 18, 1996; AND
   2. IF THE SYSTEM WAS CONSTRUCTED IN AN AREA SUBJECT TO PROTECTION UNDER M.G.L. C. 131, §40 OR BUFFER ZONE, THE SYSTEM WAS DESIGNED, CONSTRUCTED, AND INSTALLED IN ACCORDANCE WITH ALL APPLICABLE PROVISIONS IN 310 CMR 10.00."

2. IN REGARD TO THE CONSTRUCTED STORMWATER WETLAND; FROM 310 CMR: DEPARTMENT OF ENVIRONMENTAL PROTECTION, SECTION 10.02(3) "NOTWITHSTANDING THE PROVISIONS OF 310 CMR 10.02(1) AND (2), THE MAINTENANCE OF A STORMWATER MANAGEMENT SYSTEM CONSTRUCTED AND/OR IMPROVED AS DEFINED IN 310 CMR 10.04 FROM NOVEMBER 18, 1996 THROUGH JANUARY 1, 2008, IN ACCORDANCE WITH THE STORMWATER MANAGEMENT STANDARDS, AS PROVIDED IN THE MASSACHUSETTS STORMWATER POLICY, ISSUED BY THE DEPARTMENT ON NOVEMBER 18, 1996 OR ON OR AFTER JANUARY 2, 2008, IN ACCORDANCE WITH THE STORMWATER MANAGEMENT STANDARDS AS PROVIDED IN 310 CMR 10.05(6)(K) THROUGH (Q) IS NOT SUBJECT TO REGULATION UNDER M.G.L. C. 131, § 40 PROVIDED THAT:
   (a) IF THE SYSTEM WAS CONSTRUCTED IN AN AREA SUBJECT TO PROTECTION UNDER M.G.L. C. 131, § 40 OR ASSOCIATED BUFFER ZONE, THE SYSTEM WAS CONSTRUCTED IN ACCORDANCE WITH ALL APPLICABLE PROVISIONS OF 310 CMR 10.00;
   (b) THE WORK TO MAINTAIN THE STORMWATER MANAGEMENT SYSTEM IS LIMITED TO MAINTENANCE OF A STORMWATER MANAGEMENT SYSTEM AS DEFINED IN 310 CMR 10.04; AND
   (c) SAID WORK UTILIZES BEST PRACTICAL MEASURES TO AVOID AND MINIMIZE IMPACTS TO WETLAND RESOURCE AREA OUTSIDE THE FOOTPRINT OF THE STORMWATER MANAGEMENT SYSTEM.

GRAPHIC SCALE
40 20 0 40
SCALE IN FEET

SEE SHEET GN-1 FOR SITE WORK GENERAL NOTES

FOR PERMITTING PURPOSES ONLY NOT RELEASED FOR CONSTRUCTION

Architecture
Engineering
Environmental
Land Surveying
BL Companies
355 Research Parkway
Meriden, CT 06450
(203) 630-1406
(203) 630-2615 Fax

COMMONWEALTH OF MASSACHUSETTS
ROBERT M. BOLES
CIVIL
No. 54612
REGISTERED PROFESSIONAL ENGINEER

PROPOSED DEVELOPMENT
100 INDUSTRIAL PARK ROAD
HINGHAM, MASSACHUSETTS

REVISIONS

No.	Date	Desc.
1.	05/12/2020	Revised per Staff and Commission Comments
2.	06/01/2020	Revised per Staff and Commission Comments
3.	07/10/2020	Revised per Planning and Peer Review Comments

Designed	A.T.K.
Drawn	A.T.K.
Reviewed	
Scale	1"=40'
Project No.	1901517
Date	03/06/2020
CAD File: GD190151701	

Title
GRADING AND DRAINAGE PLAN

Sheet No.
GD-2

Jul 13, 2020,8:26pm aklose G:\JOBS1P\1A\190151701\DWG\GD190151701.dwg
Xref (s): BD190151701 ; XY190151701 ; XC190151701 ; XC190151702 ; XC190151703 ; XE190151701 ; SU190151701

© 2020 BL COMPANIES, INC. THESE DRAWINGS SHALL NOT BE UTILIZED BY ANY PERSON, FIRM OR CORPORATION WITHOUT THE SPECIFIC WRITTEN PERMISSION OF BL COMPANIES.

TP-1 SURFACE EL.=151.36 BOTTOM EL.=141.03 GROUNDWATER TRAITS EL.=NOT ENCOUNTERED	
DEPTH (IN)	DESCRIPTION
0-16	SOIL HORIZON: OAE SOIL TEXTURE: SANDY LOAM SOIL COLOR: 10YR3/2 OTHER: WOODS (TREES CUT), FRIABLE, CRUMB
16-22	SOIL HORIZON: BW SOIL TEXTURE: SANDY LOAM SOIL COLOR: 10YR5/6 OTHER: FRIABLE, CRUMB
22-112	SOIL HORIZON: C1 SOIL TEXTURE: MEDIUM SAND SOIL COLOR: 2.5Y7/3 OTHER: LOOSE, SINGLE GRAIN, STRATIFIED, 5% GRAVEL
112-124	SOIL HORIZON: C2 SOIL TEXTURE: VERY FINE SAND SOIL COLOR: 2.5Y7/2 OTHER: VERY FRIABLE, PLATY, SINGLE GRAIN, < 5% GRAVEL ESTIMATED SEASONAL HIGH GROUND WATER: > 124"

TP-2 SURFACE EL.=151.32 BOTTOM EL.=140.24 GROUNDWATER TRAITS EL.=142.15	
DEPTH (IN)	DESCRIPTION
0-12	SOIL HORIZON: OAE SOIL TEXTURE: SANDY LOAM SOIL COLOR: 10YR3/2 OTHER: WOODS (TREES CUT), FRIABLE, CRUMB
12-18	SOIL HORIZON: BW SOIL TEXTURE: SANDY LOAM SOIL COLOR: 10YR5/6 OTHER: FRIABLE, CRUMB
18-110	SOIL HORIZON: C1 SOIL TEXTURE: MEDIUM SAND SOIL COLOR: 2.5Y7/3 OTHER: LOOSE, SINGLE GRAIN, STRATIFIED, 5% GRAVEL
110-133	SOIL HORIZON: C2 SOIL TEXTURE: VERY FINE SAND SOIL COLOR: 2.5Y7/2 SOIL MOTTLING: COMMON, PROMINENT, DISTINCT AT 110" OTHER: VERY FRIABLE, PLATY, SINGLE GRAIN, < 5% GRAVEL ESTIMATED SEASONAL HIGH GROUND WATER AT 110"

TP-3 SURFACE EL.=151.44 BOTTOM EL.=141.27 GROUNDWATER TRAITS EL.=NOT ENCOUNTERED	
DEPTH (IN)	DESCRIPTION
0-18	SOIL HORIZON: FILL AND A SOIL TEXTURE: SANDY LOAM SOIL COLOR: 10YR3/2 OTHER: WOODS (TREES CUT), FRIABLE, CRUMB
18-28	SOIL HORIZON: BW SOIL TEXTURE: SANDY LOAM SOIL COLOR: 10YR5/6 OTHER: FRIABLE, CRUMB
28-105	SOIL HORIZON: C1 SOIL TEXTURE: MEDIUM SAND SOIL COLOR: 2.5Y7/3 OTHER: LOOSE, SINGLE GRAIN, STRATIFIED, 5% GRAVEL
105-122	SOIL HORIZON: C2 SOIL TEXTURE: VERY FINE SAND SOIL COLOR: 2.5Y7/2 OTHER: VERY FRIABLE, PLATY, SINGLE GRAIN, < 5% GRAVEL

TP-4 SURFACE EL.=151.44 BOTTOM EL.=145.69 GROUNDWATER TRAITS EL.=NOT ENCOUNTERED	
DEPTH (IN)	DESCRIPTION
0-32	SOIL HORIZON: FILL AND A SOIL TEXTURE: SANDY LOAM SOIL COLOR: 10YR3/2 OTHER: WOODS (TREES CUT), FRIABLE, CRUMB
32-69	SOIL HORIZON: C SOIL TEXTURE: MEDIUM SAND SOIL COLOR: 2.5Y7/3 OTHER: LOOSE, SINGLE GRAIN, STRATIFIED, 5% GRAVEL REFUSAL AT 69"

TP-5 SURFACE EL.=151.45 BOTTOM EL.=143.62 GROUNDWATER TRAITS EL.=NOT ENCOUNTERED	
DEPTH (IN)	DESCRIPTION
0-28	SOIL HORIZON: FILL AND A SOIL TEXTURE: SANDY LOAM SOIL COLOR: 10YR3/2 OTHER: WOODS (TREES CUT), FRIABLE, CRUMB
28-38	SOIL HORIZON: BW SOIL TEXTURE: SANDY LOAM SOIL COLOR: 10YR5/6 OTHER: FRIABLE, CRUMB
38-72	SOIL HORIZON: C1 SOIL TEXTURE: MEDIUM SAND SOIL COLOR: 2.5Y7/3 OTHER: LOOSE, SINGLE GRAIN, STRATIFIED, 5% GRAVEL
72-94	SOIL HORIZON: C2 SOIL TEXTURE: VERY FINE SAND SOIL COLOR: 2.5Y7/2 OTHER: VERY FRIABLE, PLATY, SINGLE GRAIN, < 5% GRAVEL REFUSAL AT 94"

TP-6 SURFACE EL.=151.42 BOTTOM EL.=140.75 GROUNDWATER TRAITS EL.=NOT ENCOUNTERED	
DEPTH (IN)	DESCRIPTION
0-9	SOIL HORIZON: AP SOIL TEXTURE: SANDY LOAM SOIL COLOR: 10YR3/2 OTHER: LAWN, FRIABLE, CRUMB
9-21	SOIL HORIZON: BW SOIL TEXTURE: SANDY LOAM SOIL COLOR: 10YR5/6 OTHER: FRIABLE, CRUMB
21-105	SOIL HORIZON: C1 SOIL TEXTURE: MEDIUM SAND SOIL COLOR: 2.5Y7/3 OTHER: LOOSE, SINGLE GRAIN, STRATIFIED, 5% GRAVEL
105-128	SOIL HORIZON: C2 SOIL TEXTURE: VERY FINE SAND SOIL COLOR: 2.5Y7/2 OTHER: VERY FRIABLE, PLATY, SINGLE GRAIN, < 5% GRAVEL

SITE UTILITIES LEGEND

- PROPERTY LINE
- LIMIT OF DISTURBANCE LINE AND CONTRACT LIMIT LINE — LOD
- 50' AND 100' WETLAND BUFFERS — WB — WB
- ELECTRIC LINE — E — E
- ELECTRIC AND TELECOMMUNICATIONS LINES — E/T
- GAS LINE — G — G
- WATER LINE — W — W
- SANITARY SEWER LINE — S
- SANITARY SEWER FORCE MAIN — SFM
- OVERHEAD LINE — OH — OH
- TRANSFORMER — T
- HYDRANT
- UTILITY POLE
- SANITARY MANHOLE
- SANITARY CLEANOUT — CO
- WATER VALVE — WV
- GATE VALVE — GV
- THRUST BLOCK
- GREASE TRAP
- OUTLET CONTROL STRUCTURE
- HYDRODYNAMIC SEPARATOR
- STORM LINE
- CATCH BASIN
- STORM MANHOLE
- PRECAST CONCRETE TANK

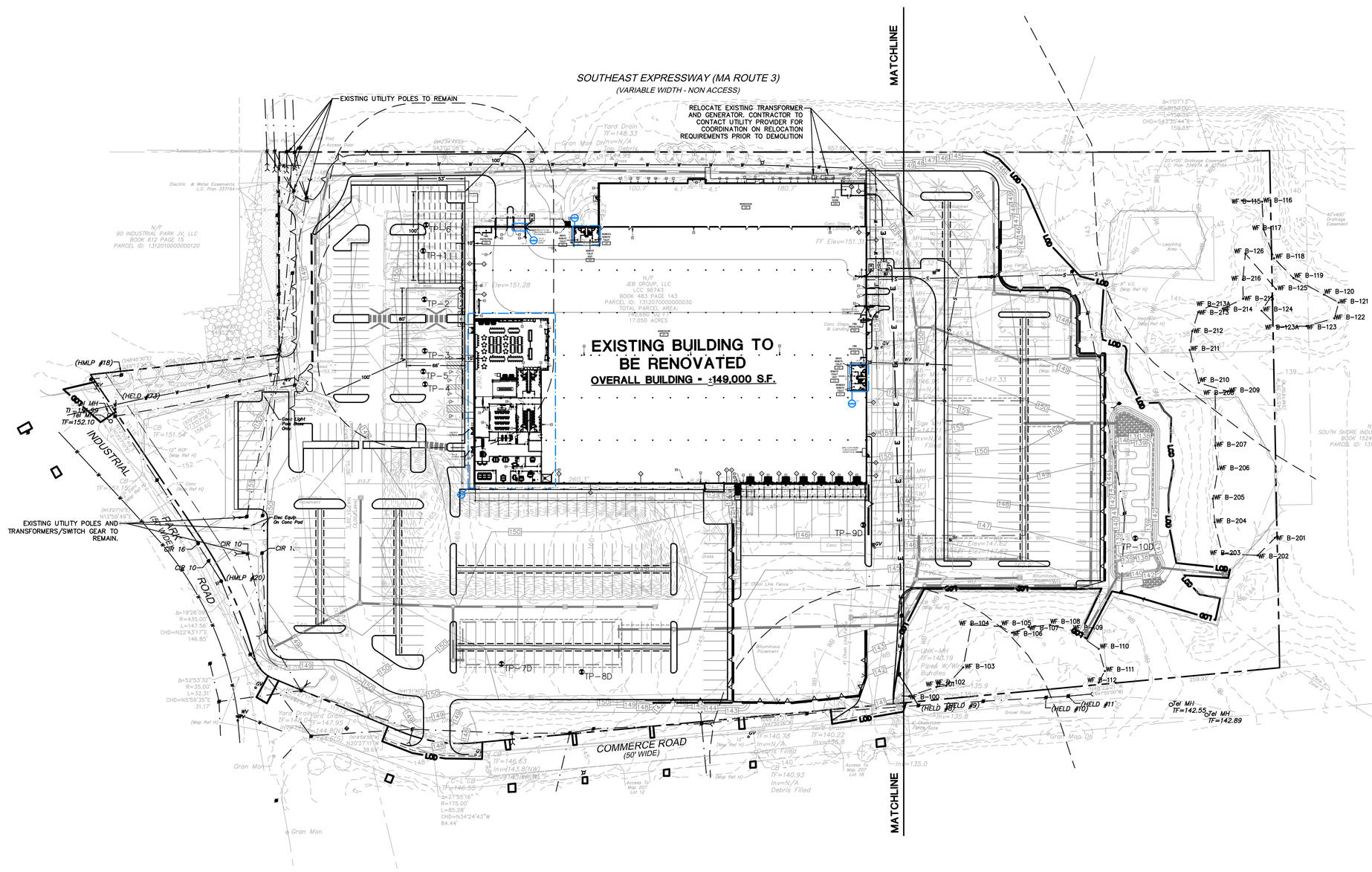

SEE SHEET GN-1 FOR SITEWORK GENERAL NOTES

FOR PERMITTING PURPOSES ONLY
NOT RELEASED FOR CONSTRUCTION

Architecture Engineering Environmental Land Surveying
BL Companies
355 Research Parkway
Meriden, CT 06450
(203) 630-1406
(203) 630-2615 Fax

COMMONWEALTH OF MASSACHUSETTS ROBERT M. BOLES CIVIL No. 54612 REGISTERED PROFESSIONAL ENGINEER

PROPOSED DEVELOPMENT
100 INDUSTRIAL PARK ROAD
HINGHAM, MASSACHUSETTS

REVISIONS

No.	Date	Desc.
1.	05/12/2020	Revised per Staff and Commission Comments
2.	07/13/2020	Revised per Planning and Peer Review Comments
3.		

Designed	P.G.M.
Drawn	P.G.M.
Reviewed	K.W.H.
Scale	1"=60'
Project No.	1901517
Date	03/06/2020
CAD File: SU190151701	

Title
OVERALL SITE UTILITIES PLAN

Sheet No.
SU-0

Xref (s): BD190151701; XY190151701; XC190151701; XL190151701; XM190151702; XC190151703; XE190151701

Jul 13, 2020-8:39am usacee ID:\JOBS\Y14\190151\7\DWG\SU190151701.dwg
LAYOUT: SU-0 MODEL: SU-0 XREF: XY14190151; XC190151; XL190151; XM190151; XC190151; XE190151; XBASE

© 2020 BL COMPANIES, INC. THESE DRAWINGS SHALL NOT BE UTILIZED BY ANY PERSON, FIRM OR CORPORATION WITHOUT THE SPECIFIC WRITTEN PERMISSION OF BL COMPANIES.

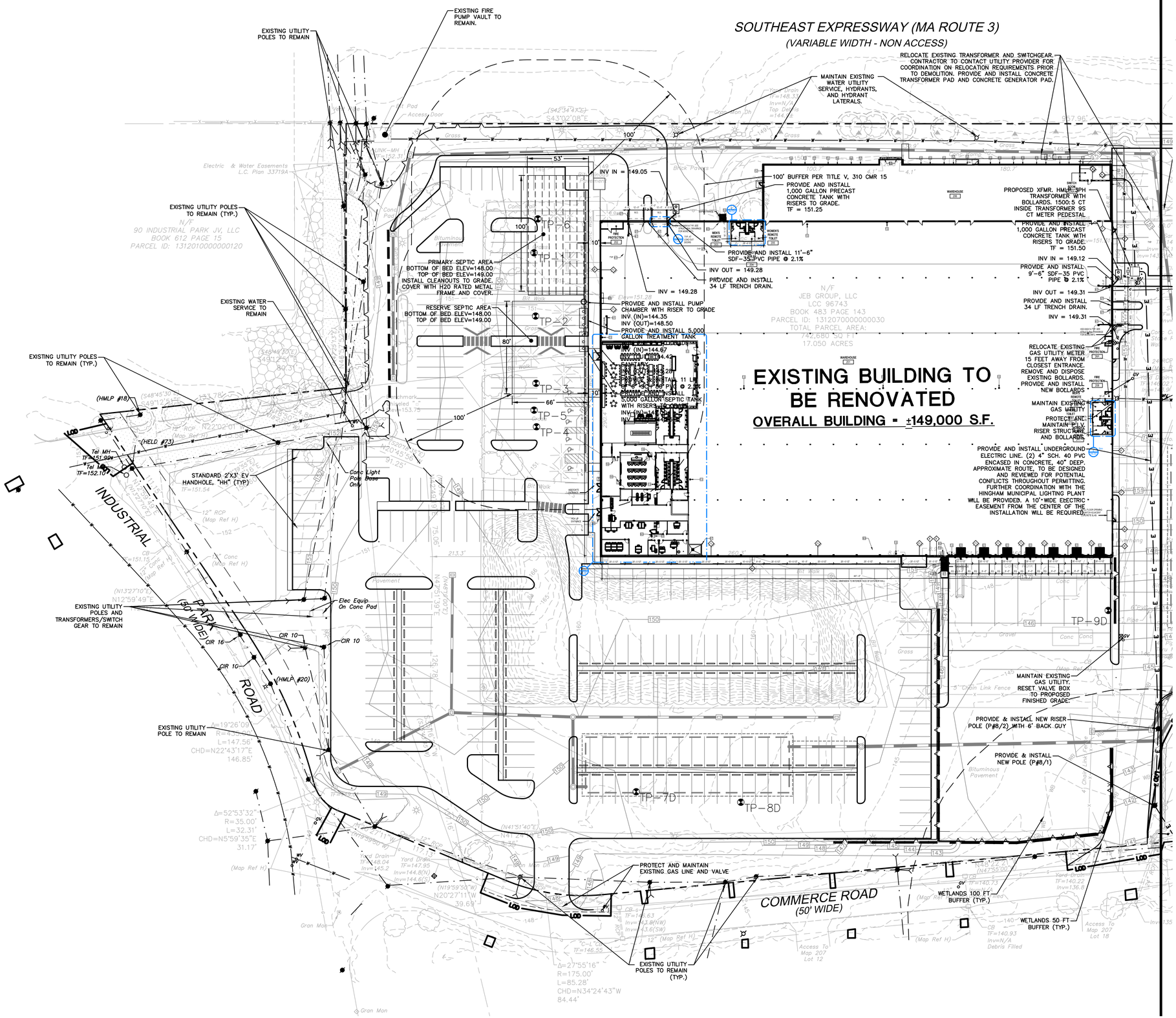

SITE UTILITIES LEGEND

PROPERTY LINE	
LIMIT OF DISTURBANCE LINE AND CONTRACT LIMIT LINE	LOD
50' AND 100' WETLAND BUFFERS	WB WB
ELECTRIC LINE	E E
ELECTRIC AND TELECOMMUNICATIONS LINES	E/T
GAS LINE	G G
WATER LINE	W W
SANITARY SEWER LINE	S
SANITARY SEWER FORCE MAIN	SFM
OVERHEAD LINE	OH OH
TRANSFORMER	T
HYDRANT	
UTILITY POLE	
SANITARY MANHOLE	
SANITARY CLEANOUT	CO
WATER VALVE	WV
GATE VALVE	GV
THRUST BLOCK	
GREASE TRAP	
OUTLET CONTROL STRUCTURE	
HYDRODYNAMIC SEPARATOR	
STORM LINE	
CATCH BASIN	
STORM MANHOLE	
PRECAST CONCRETE TANK	

SEPTIC DESIGN

USE: FACTORY, INDUSTRIAL PLANT, WAREHOUSE OR DRY STORAGE SPACE WITHOUT CAFETERIA

DESIGN RATE: 15 GALLONS PER DAY, PER PERSON
200 EMPLOYEES

DESIGN FLOW: 200 EMPLOYEES X 15 GPD = 3,000 GPD

WATER USAGE DATA: 1,127 GPD
(102,500 GALLONS / 91 DAYS = 1,127GPD)

USE 3,900 GPD (EXISTING SYSTEM CAPACITY)

LTAR-EFFLUENT LOADING RATE:
CLASS I WITH PERC RATE @ < 2 MIN/INCH
3,900 GPD / 0.74 GPD/SF = 5,271 SF

PROVIDE STONE & PIPE LEACHING BED
PRESSURE DISTRIBUTION 2" SCH. 80 PVC PIPE
MIN. 6" STONE UNDER PIPE INVERTS

GRAPHIC SCALE
40 20 0 40
SCALE IN FEET

SEE SHEET GN-1 FOR SITEWORK NOTES

FOR PERMITTING PURPOSES ONLY NOT RELEASED FOR CONSTRUCTION

Architecture Engineering Environmental Land Surveying
BL Companies
355 Research Parkway
Meriden, CT 06450
(203) 630-1406
(203) 630-2615 Fax

COMMONWEALTH OF MASSACHUSETTS ROBERT M. ROLES JR. No. 54612 REGISTERED PROFESSIONAL ENGINEER

PROPOSED DEVELOPMENT
100 INDUSTRIAL PARK ROAD
HINGHAM, MASSACHUSETTS

REVISIONS

No.	Date	Desc.
1.	03/12/2020	Revised per Staff and Commission Comments
3.	07/13/2020	Revised per Planning and Peer Review Comments

Designed	P.G.M.
Drawn	P.G.M.
Reviewed	K.W.H.
Scale	1"=40'
Project No.	1901517
Date	03/06/2020
CAD File:	SU190151701

Title
SITE UTILITIES PLAN

Sheet No.
SU-1

Jul 13, 2020-8:09pm cdotson G:\JOBS\19\14\1901517\DWG\SU190151701.dwg
LAYOUT: ARCHIVE-ISO(Scale 1:40) XREFS: XW190151701 XC190151702 XC190151703 XE190151701 XLB190151701 XT190151701 XV190151701 XB190151701
© 2020 BL COMPANIES, INC. THESE DRAWINGS SHALL NOT BE UTILIZED BY ANY PERSON, FIRM OR CORPORATION WITHOUT THE SPECIFIC WRITTEN PERMISSION OF BL COMPANIES.

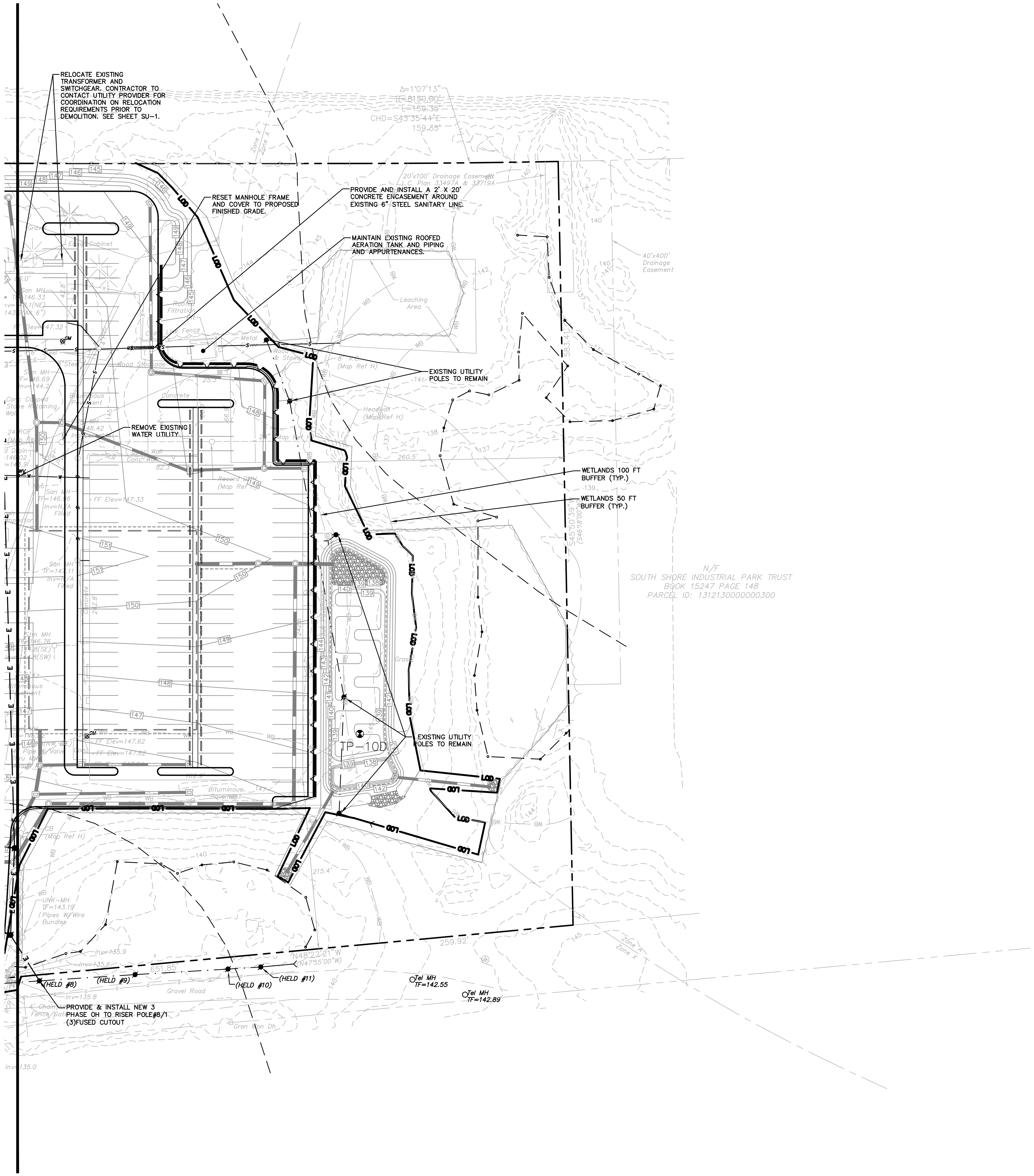

SITE UTILITIES LEGEND

PROPERTY LINE	
LIMIT OF DISTURBANCE LINE AND CONTRACT LIMIT LINE	LOD
50' AND 100' WETLAND BUFFERS	WB WB
ELECTRIC LINE	E E
ELECTRIC AND TELECOMMUNICATIONS LINES	E/T
GAS LINE	G G
WATER LINE	W W
SANITARY SEWER LINE	S
SANITARY SEWER FORCE MAIN	SFM
OVERHEAD LINE	OH OH
TRANSFORMER	T
HYDRANT	
UTILITY POLE	
SANITARY MANHOLE	
SANITARY CLEANOUT	CO
WATER VALVE	WV
GATE VALVE	GV
THRUST BLOCK	
GREASE TRAP	
OUTLET CONTROL STRUCTURE	
HYDRODYNAMIC SEPARATOR	
STORM LINE	
CATCH BASIN	
STORM MANHOLE	
FLARED END	
END WALL OR HEADWALL	
PRECAST CONCRETE TANK	

GRAPHIC SCALE

40 20 0 40

SCALE IN FEET

SEE SHEET GN-1 FOR SITEWORK GENERAL NOTES

FOR PERMITTING PURPOSES ONLY NOT RELEASED FOR CONSTRUCTION

Architecture
Engineering
Environmental
Land Surveying

BL Companies

355 Research Parkway
Meriden, CT 06450
(203) 630-1406
(203) 630-2615 Fax

COMMONWEALTH OF MASSACHUSETTS ROBERT M. BOLES CIVIL No. 54612 REGISTERED PROFESSIONAL ENGINEER

PROPOSED DEVELOPMENT
100 INDUSTRIAL PARK ROAD
HINGHAM, MASSACHUSETTS

REVISIONS

No.	Date	Desc.
1.	05/12/2020	Revised per Staff and Commission Comments
3.	07/13/2020	Revised per Planning and Peer Review Comments

Designed	P.G.M.
Drawn	P.G.M.
Reviewed	K.W.H.
Scale	1"=40'
Project No.	1901517
Date	03/06/2020
CAD File:	SU190151701

Title

SITE UTILITIES PLAN

Sheet No.

SU-2

Xref (s): ; BD190151701 ; XY190151701 ; XC190151701 ; XL190151701 ; XC190151702 ; XC190151703 ; XE190151701

Jul 13, 2020 8:09pm aklose G:\JOBS19\14\1901517\DWG\SU190151701.dwg
Layout: SU-2 24x36 40SC

© 2020 BL COMPANIES, INC. THESE DRAWINGS SHALL NOT BE UTILIZED BY ANY PERSON, FIRM OR CORPORATION WITHOUT THE SPECIFIC WRITTEN PERMISSION OF BL COMPANIES.

EROSION CONTROL LEGEND:

CONTROL MEASURE	ILLUSTRATION
SILT SACK AT CATCH BASINS	
STONE CHECK DAM	
SILT FENCE	SF — SF
SILT FENCE WITH COMPOST FILTER SOCKS (UTILIZE AT BASE OF SLOPE)	SF — SF
CONSTRUCTION ENTRANCE	CE
LIMIT OF CLEARING	
LIMIT OF DISTURBANCE LINE AND CONTRACT LIMIT LINE	LOD
STOCKPILE AREA WITH DOUBLE ROW OF SILT FENCE	
DIVERSION SWALE	>
TEMPORARY SEDIMENT TRAP	TST
EROSION CONTROL BLANKET	ECB
WETLAND 50 FT AND 100 FT BUFFER	WB
RIP RAP SPILLWAY WITH WASHED AGGREGATE AT TEMPORARY SEDIMENT TRAPS	

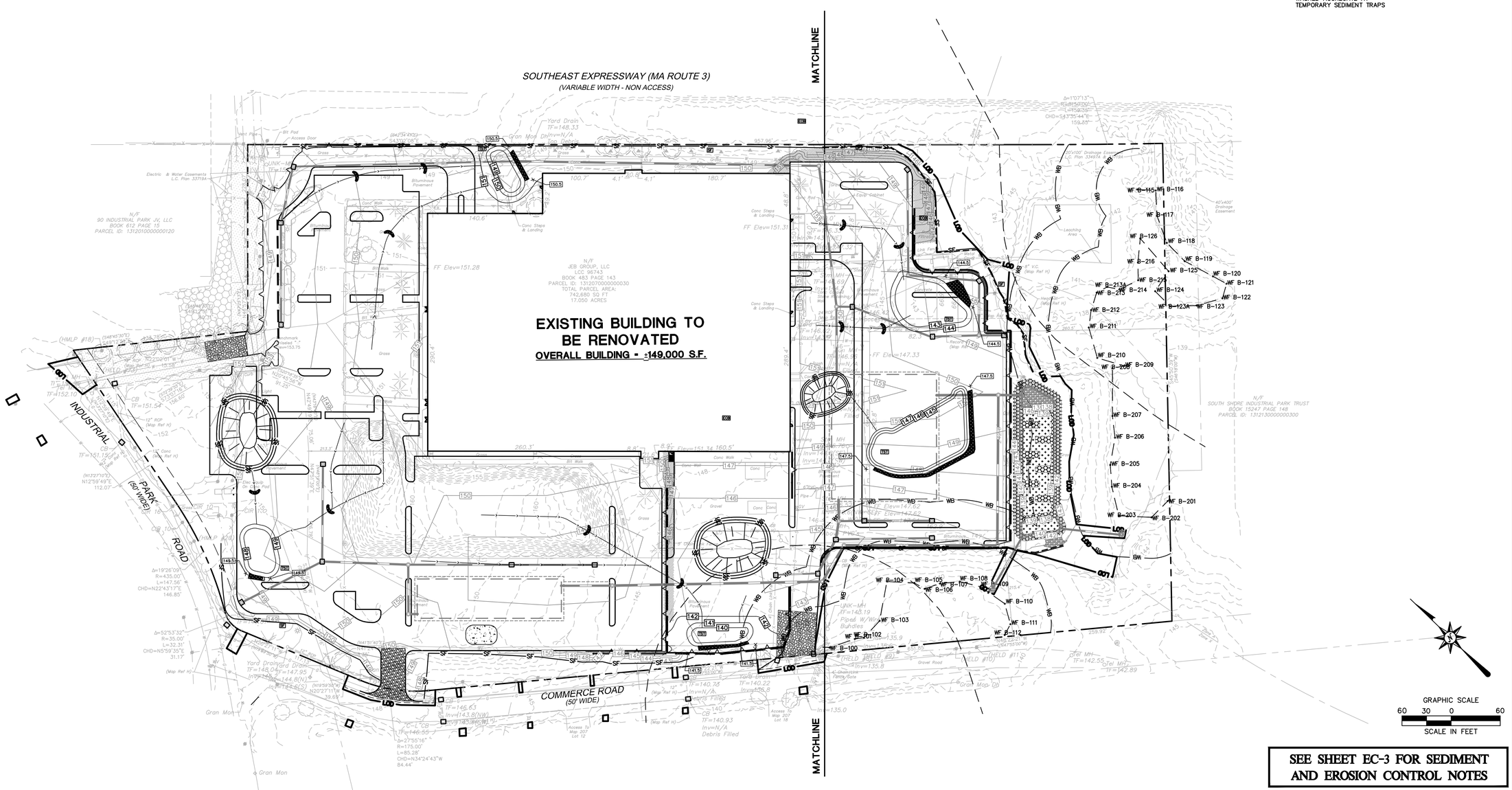

SEE SHEET EC-3 FOR SEDIMENT AND EROSION CONTROL NOTES

FOR PERMITTING PURPOSES ONLY NOT RELEASED FOR CONSTRUCTION

Architecture
Engineering
Environmental
Land Surveying

BL Companies

355 Research Parkway
Meriden, CT 06450
(203) 630-1406
(203) 630-2615 Fax

COMMONWEALTH OF MASSACHUSETTS
ROBERT M. BOLES
CIVIL
No. 54612
PROFESSIONAL ENGINEER

PROPOSED DEVELOPMENT
100 INDUSTRIAL PARK ROAD
HINGHAM, MASSACHUSETTS

REVISIONS

No.	Date	Desc.
1.	05/12/2020	Revised per Staff and Commission Comments
3.	07/13/2020	Revised per Planning and Peer Review Comments

Designed	P.G.M.
Drawn	P.G.M.
Reviewed	
Scale	1"=60'
Project No.	1901517
Date	03/06/2020
CAD File: EC190151701	

Title
OVERALL SEDIMENT AND EROSION CONTROL PLAN

Sheet No.
EC-0

Xref (s): 1BD190151701 ; XV190151701 ; XC190151701 ; XL190151701 ; XC190151702 ; XC190151703 ; XE190151701 ; XC190151704

Jul 13, 2020-8:10pm cassie G:\JOBS\PLM\1901517\DWG\EC\190151701.dwg
Layout: EC-0 Model: Model Xrefs: 1XV190151701 1XW190151701 1XW190151702 1XW190151703 1XW190151704 1XW190151705

© 2020 BL COMPANIES, INC. THESE DRAWINGS SHALL NOT BE UTILIZED BY ANY PERSON, FIRM OR CORPORATION WITHOUT THE SPECIFIC WRITTEN PERMISSION OF BL COMPANIES.

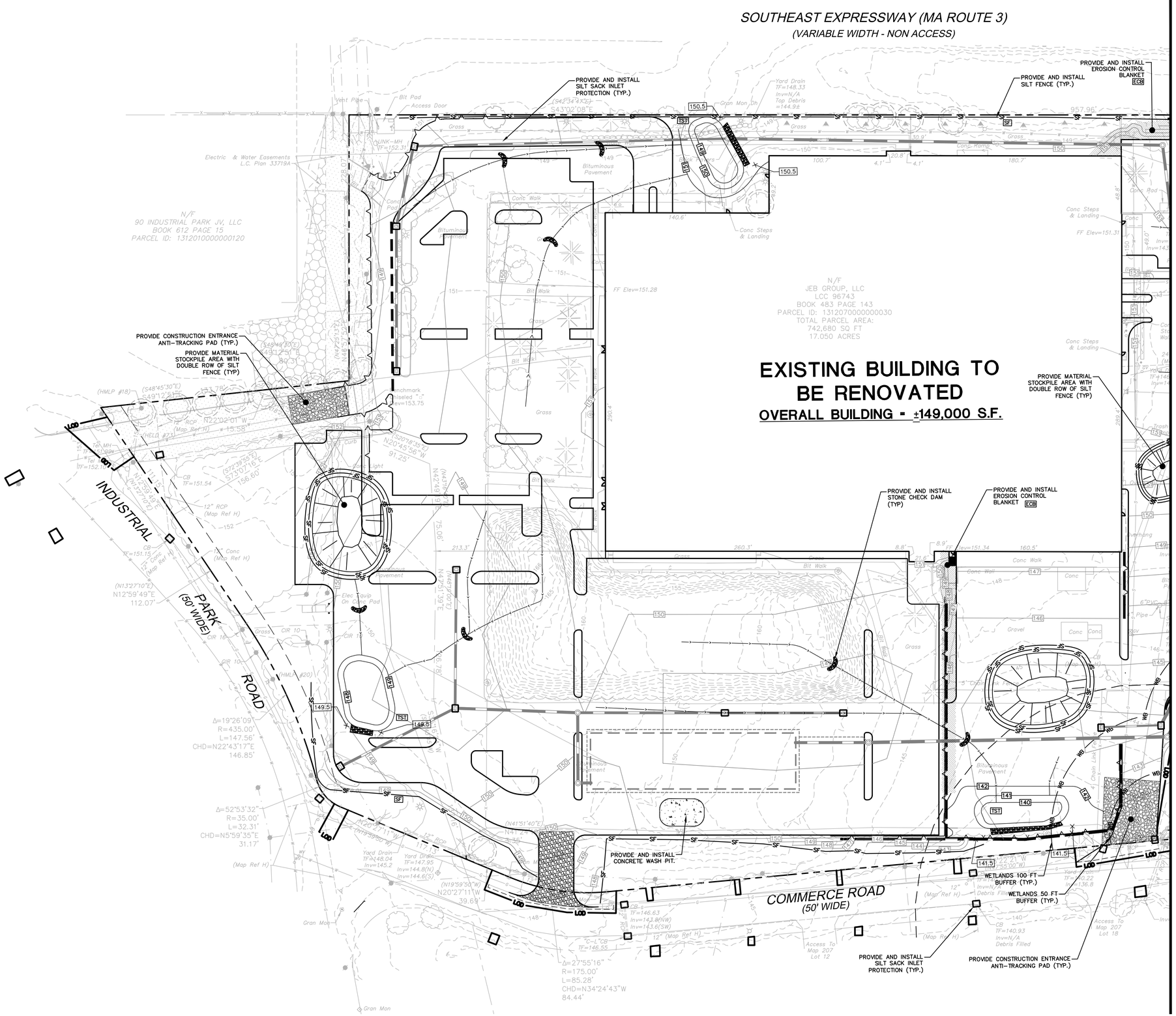

EROSION CONTROL LEGEND:

CONTROL MEASURE	ILLUSTRATION
SILT SACK AT CATCH BASINS	
STONE CHECK DAM	
SILT FENCE	SF
SILT FENCE WITH COMPOST FILTER SOCKS (UTILIZE AT BASE OF SLOPE)	SF
CONSTRUCTION ENTRANCE	CE
LIMIT OF CLEARING	
LIMIT OF DISTURBANCE LINE AND CONTRACT LIMIT LINE	LOD
STOCKPILE AREA WITH DOUBLE ROW OF SILT FENCE	
DIVERSION SWALE	>
TEMPORARY SEDIMENT TRAP	TST
EROSION CONTROL BLANKET	ECB
WETLAND 50 FT AND 100 FT BUFFER	WB
RIP RAP SPILLWAY WITH WASHED AGGREGATE AT TEMPORARY SEDIMENT TRAPS	

SEE SHEET EC-3 FOR SEDIMENT AND EROSION CONTROL NOTES

FOR PERMITTING PURPOSES ONLY NOT RELEASED FOR CONSTRUCTION

Architecture
Engineering
Environmental
Land Surveying

BL Companies

355 Research Parkway
Meriden, CT 06450
(203) 630-1406
(203) 630-2615 Fax

COMMONWEALTH OF MASSACHUSETTS
ROBERT M. BOLER
CIVIL
No. 54612
REGISTERED PROFESSIONAL ENGINEER

PROPOSED DEVELOPMENT
100 INDUSTRIAL PARK ROAD
HINGHAM, MASSACHUSETTS

REVISIONS

No.	Date	Desc.
1.	05/12/2020	Revised per Staff and Commission Comments
3.	07/13/2020	Revised per Planning and Peer Review Comments

Designed	P.G.M.
Drawn	P.G.M.
Reviewed	
Scale	1"=40'
Project No.	1901517
Date	03/06/2020
CAD File: EC190151701	

Title
SEDIMENT AND EROSION CONTROL PLAN

Sheet No.
EC-1

Xref (BL: BD190151701 ; XY190151701 ; XL190151701 ; XC190151702 ; XC190151703 ; XE190151701 ; XC190151704

Jul 13, 2020-8:10am ebloise G:\JOBS\Y\141901517\DWG\EC190151701.dwg
Layout: EC-1 ebloise G:\LAYOUT\DWG\EC190151701.dwg

© 2020 BL COMPANIES, INC. THESE DRAWINGS SHALL NOT BE UTILIZED BY ANY PERSON, FIRM OR CORPORATION WITHOUT THE SPECIFIC WRITTEN PERMISSION OF BL COMPANIES.

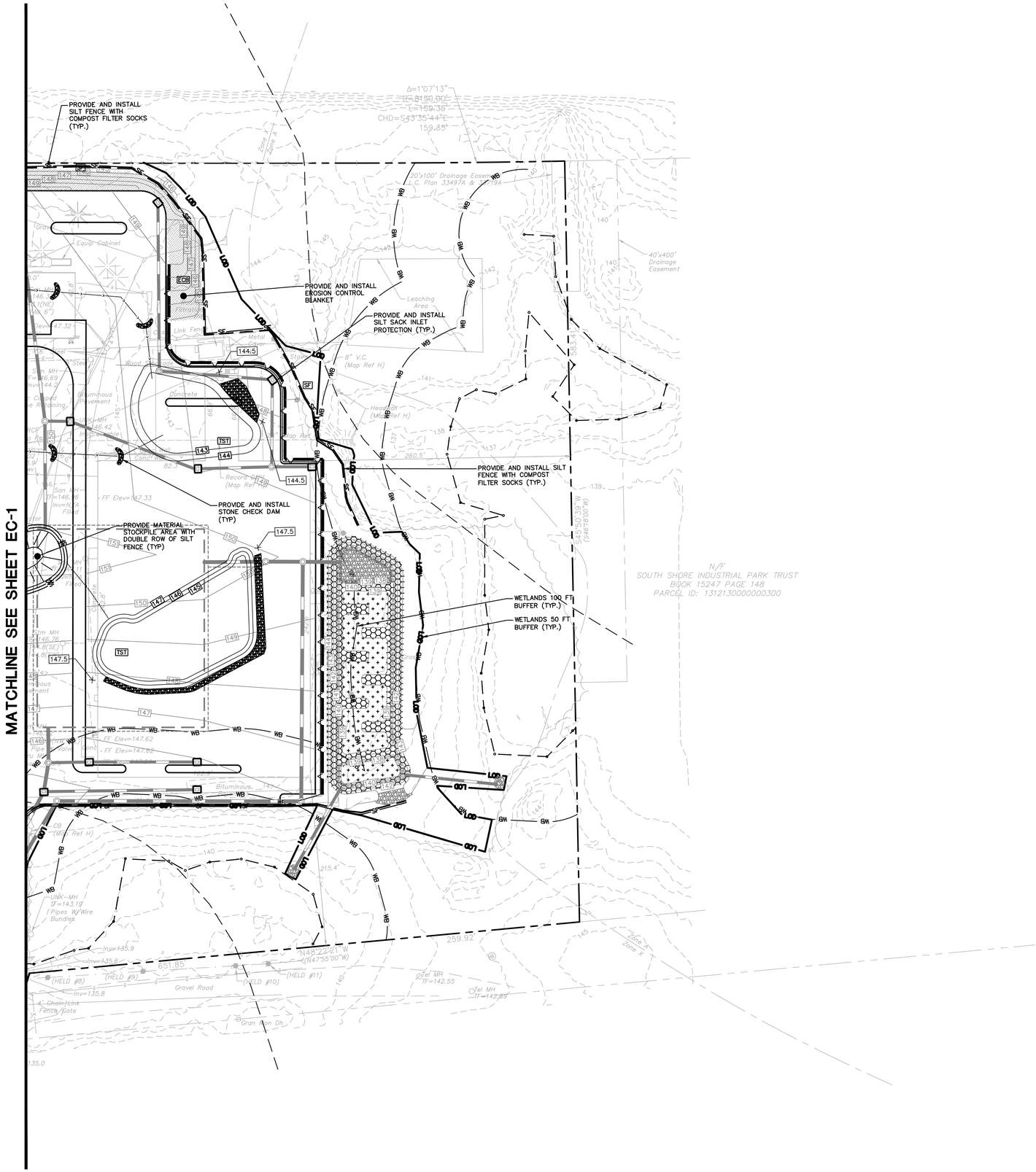

EROSION CONTROL LEGEND:

CONTROL MEASURE	ILLUSTRATION
SILT SACK AT CATCH BASINS	
STONE CHECK DAM	
SILT FENCE	SF — SF
SILT FENCE WITH COMPOST FILTER SOCKS (UTILIZE AT BASE OF SLOPE)	SF — SF
CONSTRUCTION ENTRANCE	CE
LIMIT OF CLEARING	
LIMIT OF DISTURBANCE LINE AND CONTRACT LIMIT LINE	LOD
STOCKPILE AREA WITH DOUBLE ROW OF SILT FENCE	
DIVERSION SWALE	>
TEMPORARY SEDIMENT TRAP	TST
EROSION CONTROL BLANKET	ECB
WETLAND 50 FT AND 100 FT BUFFER	WB
RIP RAP SPILLWAY WITH WASHED AGGREGATE AT TEMPORARY SEDIMENT TRAPS	

GRAPHIC SCALE

40 20 0 40

SCALE IN FEET

SEE SHEET EC-3 FOR SEDIMENT AND EROSION CONTROL NOTES

FOR PERMITTING PURPOSES ONLY NOT RELEASED FOR CONSTRUCTION

Architecture
Engineering
Environmental
Land Surveying

BL Companies

355 Research Parkway
Meriden, CT 06450
(203) 630-1406
(203) 630-2615 Fax

COMMONWEALTH OF MASSACHUSETTS
ROBERT M. BOLER
CIVIL
No. 54612
REGISTERED PROFESSIONAL ENGINEER

PROPOSED DEVELOPMENT

100 INDUSTRIAL PARK ROAD
HINGHAM, MASSACHUSETTS

REVISIONS

No.	Date	Desc.
1.	05/12/2020	Revised per Staff and Commision Comments
3.	07/13/2020	Revised per Staff and Commision Comments

Designed	P.G.M.
Drawn	P.G.M.
Reviewed	
Scale	1"=40'
Project No.	1901517
Date	03/06/2020

CAD File: EC190151701

Title

SEDIMENT AND EROSION CONTROL PLAN

Sheet No.

EC-2

Xref (s): - BD190151701 , XY190151701 , XL190151701 , XC190151701 , XC190151702 , XC190151703 , XE190151701 , XC190151704

Jul 13, 2020 8:10pm oblaise G:\JOBS19\14\1901517\DWG\EC190151701.dwg
Layout: 24x36ANSIDefault Xref: 1901517DWGEC190151701DWGEC7-24X36-ANSI

© 2020 BL COMPANIES, INC. THESE DRAWINGS SHALL NOT BE UTILIZED BY ANY PERSON, FIRM OR CORPORATION WITHOUT THE SPECIFIC WRITTEN PERMISSION OF BL COMPANIES.

SEDIMENT AND EROSION CONTROL NOTES

SEDIMENT AND EROSION CONTROL NOTES – MASSACHUSETTS
SEDIMENT & EROSION CONTROL NARRATIVE
THE SEDIMENT AND EROSION CONTROL PLAN WAS DEVELOPED TO PROTECT THE EXISTING ROADWAY AND STORM DRAINAGE SYSTEMS, ADJACENT PROPERTIES, AND ANY ADJACENT WETLAND AREA AND ANY ADJACENT WATER COURSE FROM SEDIMENT LADEN SURFACE RUNOFF AND EROSION. A CONSTRUCTION SEQUENCE IS PROVIDED TO PROVIDE SURFACE RUNOFF EROSION CONTROLS PRIOR TO THE BEGINNING OF PROJECT DEMOLITION AND/OR CONSTRUCTION.

CONSTRUCTION SCHEDULE
THE ANTICIPATED STARTING DATE FOR CONSTRUCTION IS SPRING 2020 WITH COMPLETION ANTICIPATED FALL 2020. APPROPRIATE SEDIMENT AND EROSION CONTROL MEASURES AS DESCRIBED HEREIN SHALL BE INSTALLED BY THE CONTRACTOR PRIOR TO THE COMMENCEMENT OF ALL DEMOLITION OR CONSTRUCTION ACTIVITY. SCHEDULE WORK TO MINIMIZE THE LENGTH OF TIME THAT BARE SOIL WILL BE EXPOSED.

CONTINGENCY EROSION PLAN
THE CONTRACTOR SHALL INSTALL ALL SPECIFIED SEDIMENT AND EROSION CONTROL MEASURES AND WILL BE REQUIRED TO MAINTAIN THEM IN THEIR INTENDED FUNCTIONING CONDITION. THE AGENTS OF THE MUNICIPALITY AND/OR COUNTY SOILS CONSERVATION DISTRICT OR CONSERVATION COMMISSION AND/OR CIVIL ENGINEER SHALL HAVE THE AUTHORITY TO REQUIRE SUPPLEMENTAL MAINTENANCE OR ADDITIONAL MEASURES IF FIELD CONDITIONS ARE ENCOUNTERED BEYOND WHAT WOULD NORMALLY BE ANTICIPATED.

CONSTRUCTION SEQUENCE
THE FOLLOWING CONSTRUCTION SEQUENCE IS RECOMMENDED:

1. CONTACT MUNICIPALITY AND/OR COUNTY SOILS CONSERVATION DISTRICT OR CONSERVATION COMMISSION AGENT AT LEAST FORTY–EIGHT (48) HOURS PRIOR TO COMMENCEMENT OF ANY DEMOLITION, CONSTRUCTION OR REGULATED ACTIVITY ON THIS PROJECT.
2. CLEARING LIMITS SHALL BE PHYSICALLY MARKED IN THE FIELD AND APPROVED BY THE MUNICIPALITY AND/OR COUNTY SOILS CONSERVATION DISTRICT OR CONSERVATION COMMISSION AGENT PRIOR TO THE START OF WORK ON THE SITE. INSTALL TREE PROTECTION AND PERIMETER SILT FENCE.
3. CONSTRUCT STONE CONSTRUCTION ENTRANCE ANTI–TRACKING PADS AT CONSTRUCTION ENTRANCES/EXITS AND INSTALL FILTER FABRIC AROUND GRATES OF CATCH BASINS OR INSTALL SILT SACKS ON CATCH BASIN INLETS ON OFF SITE ROADS. INSTALL SILT FENCE AND OTHER EROSION CONTROL DEVICES INDICATED ON THESE PLANS AT PERIMETER OF PROPOSED SITE DISTURBANCE AND INSTALL ALL EROSION CONTROL MEASURES AND TREE PROTECTION INDICATED ON THESE PLANS. INSTALL SEDIMENT BASINS AND SEDIMENT TRAPS IF REQUIRED AT LOW AREAS OF SITE OR AS ORDERED BY THE ENGINEER OR AS SHOWN ON THESE PLANS.
4. CLEAR AND GRUB SITE. STOCKPILE CHIPS. STOCKPILE TOPSOIL. INSTALL SEDIMENT AND EROSION CONTROLS AT STOCKPILES.
5. SELECTIVE BUILDING AND SITE DEMOLITION AND REMOVAL. PAVEMENT REMOVAL.
6. INSTALL SILT FENCE, CONSTRUCT DIVERSION SWALES AND SEDIMENT TRAPS. COMMENCE INSTALLATION OF STORM DRAINAGE SYSTEM.
7. COMMENCE EARTHWORK. CONSTRUCT FILL SLOPE AND RETAINING WALL. INSTALL ADDITIONAL SEDIMENT AND EROSION CONTROLS AS WORK PROGRESSES AND CONTINUE STORM DRAINAGE SYSTEM CONSTRUCTION, TOPSOIL AND SEED SLOPES WHICH HAVE ACHIEVED FINAL SITE GRADING.
8. CONSTRUCTION STAKING OF ALL BUILDING CORNERS, UTILITIES, ACCESS DRIVES, AND PARKING AREAS.
9. ROUGH GRADING AND FILLING OF SUBGRADES AND SLOPES.
10. IMMEDIATELY UPON DISCOVERING UNFORESEEN CIRCUMSTANCES POSING THE POTENTIAL FOR ACCELERATED EROSION AND/OR SEDIMENT POLLUTION, THE OPERATOR SHALL IMPLEMENT APPROPRIATE BEST MANAGEMENT PRACTICES TO ELIMINATE THE POTENTIAL FOR ACCELERATED EROSION AND/OR SEDIMENT POLLUTION.
11. BEFORE DISPOSING OF SOIL OR RECEIVING BORROW FOR THE SITE, THE CONTRACTOR MUST PROVIDE EVIDENCE THAT EACH SPOIL OR BORROW AREA HAS A SEDIMENT AND EROSION CONTROL PLAN APPROVED BY THE MUNICIPALITY AND/OR COUNTY SOILS CONSERVATION DISTRICT AND/OR CONSERVATION COMMISSION AND WHICH IS BEING IMPLEMENTED AND MAINTAINED. THE CONTRACTOR SHALL ALSO NOTIFY THE APPROPRIATE MUNICIPALITY AND/OR COUNTY SOILS CONSERVATION DISTRICT AND/OR CONSERVATION COMMISSION IN WRITING OF ALL RECEIVING SPOIL AND BORROW AREAS WHEN THEY HAVE BEEN IDENTIFIED.
12. CONTINUE INSTALLATION OF STORM DRAINAGE AS SUBGRADE ELEVATIONS ARE ACHIEVED.
13. THROUGHOUT CONSTRUCTION SEQUENCE, REMOVE SEDIMENT FROM BEHIND SILT FENCES, HAY BALES AND OTHER EROSION CONTROL DEVICES, AND FROM SEDIMENT BASINS AND SEDIMENT TRAPS AS REQUIRED. REMOVAL SHALL BE ON A PERIODIC BASIS (EVERY SIGNIFICANT RAINFALL OF 0.25 INCH OR GREATER). INSPECTION OF SEDIMENT AND EROSION CONTROL MEASURES SHALL BE ON A WEEKLY BASIS AND AFTER EACH RAINFALL OF 0.25 INCHES OR GREATER. SEDIMENT COLLECTED SHALL BE DEPOSITED AND SPREAD EVENLY UPLAND ON SLOPES DURING CONSTRUCTION.
14. INSTALL UTILITIES. COMPLETE STORM DRAINAGE SYSTEM.
15. INSTALL SITE LIGHTING.
16. COMPLETE GRADING TO SUBGRADES AND CONSTRUCT PARKING AREA SUBGRADE.
17. CONSTRUCT CURBS, PAVEMENT STRUCTURE AND SIDEWALKS.
18. CONDUCT FINE GRADING.
19. PAVE PARKING AREAS AND DRIVEWAYS
20. FINAL FINE GRADING OF SLOPE AND NON–PAVED AREAS.
21. PLACE TOPSOIL ON SLOPES AFTER FINAL GRADING IS COMPLETED. FERTILIZE SEED AND MULCH. REFER TO LANDSCAPE PLAN FOR NOTES ON SEED MIXTURES AND TOPSOIL. USE EROSION CONTROL BLANKETS AS REQUIRED OR ORDERED FOR SLOPES GREATER THAN 3:1 AND AS SHOWN ON LANDSCAPE PLANS OR EROSION CONTROL PLANS. FOR TEMPORARY STABILIZATION BEYOND SEEDING DATES USE ANNUAL RYE AT 4.0 LBS/1,000 S.F. FERTILIZE WITH 10–10–10 AT 1.0 LBS. OF NITROGEN PER 1,000 S.F. AND LIME AT 100 LBS/1,000 S.F. (MAX.).
22. LANDSCAPE ISLANDS, INTERIOR NON–PAVED AREAS, AND PERIMETER AREAS.
23. INSTALL SIGNING AND PAVEMENT MARKINGS
24. CLEAN STORM DRAINAGE PIPE STRUCTURES, DETENTION SYSTEMS AND WATER QUALITY DEVICES OF DEBRIS AND SEDIMENT.
25. UPON DIRECTION OF THE MUNICIPALITY AND/OR COUNTY SOILS CONSERVATION DISTRICT AND/OR CONSERVATION COMMISSION AGENT, SEDIMENT AND EROSION CONTROL MEASURES SHALL BE REMOVED FOLLOWING STABILIZATION OF THE SITE.

OPERATION REQUIREMENTS

CLEARING AND GRUBBING OPERATIONS
1. ALL SEDIMENT AND EROSION CONTROL MEASURES, INCLUDING THE CONSTRUCTION OF STONE CONSTRUCTION ENTRANCE ANTI–TRACKING PADS, WILL BE INSTALLED PRIOR TO THE START OF CLEARING AND GRUBBING AND DEMOLITION OPERATIONS.
2. FOLLOWING INSTALLATION OF ALL SEDIMENT AND EROSION CONTROL MEASURES, THE CONTRACTOR SHALL NOT PROCEED WITH GRADING, FILLING OR OTHER CONSTRUCTION OPERATIONS UNTIL THE ENGINEER HAS INSPECTED AND APPROVED ALL INSTALLATIONS.
3. THE CONTRACTOR SHALL TAKE EXTREME CARE DURING CLEARING AND GRUBBING OPERATIONS SO AS NOT TO DISTURB UNPROTECTED WETLAND AREAS OR SEDIMENT AND EROSION CONTROL DEVICES.
4. FOLLOWING THE COMPLETION OF CLEARING AND GRUBBING OPERATIONS, ALL AREAS SHALL BE STABILIZED WITH TOPSOIL AND SEEDING OR CRUSHED STONE AS SOON AS PRACTICAL.

ROUGH GRADING OPERATIONS

1. DURING THE REMOVAL AND/OR PLACEMENT OF EARTH AS INDICATED ON THE GRADING PLAN, TOPSOIL SHALL BE STRIPPED AND APPROPRIATELY STOCKPILED FOR REUSE.
2. ALL STOCKPILED TOPSOIL SHALL BE SEEDED, MULCHED WITH HAY, AND ENCLOSED BY A SILTATION FENCE.

FILLING OPERATIONS

1. PRIOR TO FILLING, ALL SEDIMENT AND EROSION CONTROL DEVICES SHALL BE PROPERLY IMPLEMENTED, MAINTAINED AND FULLY INSTALLED, AS DIRECTED BY THE ENGINEER AND AS SHOWN ON THIS PLAN.
2. ALL FILL MATERIAL ADJACENT TO ANY WETLAND AREAS, IF APPLICABLE TO THIS PROJECT, SHALL BE GOOD QUALITY, WITH LESS THAN 5% FINES PASSING THROUGH A #200 SIEVE (BANK RUN), SHALL BE PLACED IN LIFT THICKNESSES NOT GREATER THAN THAT SPECIFIED IN PROJECT SPECIFICATIONS AND/OR THE PROJECT GEOTECHNICAL REPORT. LIFTS SHALL BE COMPACTED TO 95% MAX. DRY DENSITY MODIFIED PROCTOR OR AS SPECIFIED IN THE CONTRACT SPECIFICATIONS OR IN THE GEOTECHNICAL REPORT.
3. AS GENERAL GRADING OPERATIONS PROGRESS, ANY TEMPORARY DIVERSION DITCHES SHALL BE RAISED OR LOWERED, AS NECESSARY, TO DIVERT SURFACE RUNOFF TO THE SEDIMENT BASINS OR SEDIMENT TRAPS.

PLACEMENT OF DRAINAGE STRUCTURES, UTILITIES, AND BUILDING CONSTRUCTION OPERATIONS.

1. SILT FENCES SHALL BE INSTALLED AT THE DOWNHILL SIDES OF BUILDING EXCAVATIONS, MUD PUMP DISCHARGES, AND UTILITY TRENCH MATERIAL STOCKPILES. HAY BALES/STRAW BALES MAY BE USED IF SHOWN ON THE SEDIMENT AND EROSION CONTROL PLANS OR IF DIRECTED BY THE CIVIL ENGINEER.

FINAL GRADING AND PAVING OPERATIONS

1. ALL INLET AND OUTLET PROTECTION SHALL BE PLACED AND MAINTAINED AS SHOWN ON SEDIMENT AND EROSION CONTROL PLANS AND DETAILS, AND AS DESCRIBED IN SPECIFICATIONS AND AS DESCRIBED HEREIN.
2. NO CUT OR FILL SLOPES SHALL EXCEED 3:1 EXCEPT WHERE STABILIZED BY ROCK FACED EMBANKMENTS OR EROSION CONTROL BLANKETS, OR JUTE MESH AND VEGETATION. ALL SLOPES SHALL BE SEEDED, AND ANY ROAD OR DRIVEWAY SHOULDER AND BANKS SHALL BE STABILIZED IMMEDIATELY UPON COMPLETION OF FINAL GRADING UNTIL TURF IS ESTABLISHED.
3. PAVEMENT SUB–BASE AND BASE COURSES SHALL BE INSTALLED OVER AREAS TO BE PAVED AS SOON AS FINAL SUB–GRADES ARE ESTABLISHED AND UNDERGROUND UTILITIES AND STORM DRAINAGE SYSTEMS HAVE BEEN INSTALLED.
4. AFTER CONSTRUCTION OF PAVEMENT, TOPSOIL, FINAL SEED, MULCH AND LANDSCAPING, REMOVE ALL TEMPORARY SEDIMENT AND EROSION CONTROL DEVICES ONLY AFTER ALL AREAS HAVE BEEN PAVED AND/OR GRASS HAS BEEN WELL ESTABLISHED AND THE SITE IS STABLE AND HAS BEEN INSPECTED AND APPROVED BY THE MUNICIPALITY AND/OR COUNTY SOILS CONSERVATION DISTRICT AND/OR CONSERVATION COMMISSION.

INSTALLATION OF SEDIMENTATION AND EROSION CONTROL MEASURES

I. SILTATION FENCE
A. DIG A SIX INCH TRENCH ON THE UPHILL SIDE OF THE DESIGNATED FENCE LINE LOCATION.

B. POSITION THE POST AT THE BACK OF THE TRENCH (DOWNHILL SIDE), AND HAMMER THE POST AT LEAST 1.5 FEET INTO THE GROUND.

C. LAY THE BOTTOM SIX INCHES OF THE FABRIC INTO THE TRENCH TO PREVENT UNDERMINING BY STORM WATER RUN–OFF.

D. BACKFILL THE TRENCH AND COMPACT.

II. COMPOST FILTER SOCKS
A. PLACE THE FILTER SOCKS BEHIND THE SILT FENCE AT THE BOTTOM END OF SLOPE.

B. FILL AND COMPACT FILTER SOCKS WITH COMPOST OR VEGETATION MATERIAL.

C. PLACE THE FILTER MEDIA ON THE SIDE OF THE SILT FENCE.

D. IF NECESSARY, INSERT 2" X 2" X 36" WOODEN STAKES THROUGH THE CENTER OF THE FILTER SOCK EVERY 10'. MAKE SURE THAT 1' OF THE WOODEN STAKE IS BELOW THE GROUND SURFACE.

OPERATION AND MAINTENANCE OF SEDIMENT AND EROSION CONTROL MEASURES
I. SILTATION FENCE
A. ALL SILTATION FENCES SHALL BE INSPECTED AS A MINIMUM WEEKLY OR AFTER EACH RAINFALL. ALL DETERIORATED FABRIC AND DAMAGED POSTS SHALL BE REPLACED AND PROPERLY REPOSITIONED IN ACCORDANCE WITH THIS PLAN.

B. SEDIMENT DEPOSITS SHALL BE REMOVED FROM BEHIND THE FENCE WHEN THEY REACH A MAXIMUM HEIGHT OF ONE FOOT.

II. COMPOST FILTER SOCKS
A. ALL FILTER SOCKS SHALL BE INSPECTED AS A MINIMUM WEEKLY OR AFTER EACH RAINFALL. ALL DETERIORATED MATERIAL AND DAMAGED WOODEN STAKES SHALL BE REPLACED AND PROPERLY REPOSITIONED IN ACCORDANCE WITH THIS PLAN.

B. DEPOSITS SHALL BE REMOVED AND CLEANED OUT IF HALF OF THE ORIGINAL HEIGHT OF THE FILTER SOCKS BECOME FILLED WITH SEDIMENT.

III. SEDIMENT BASINS/SEDIMENT TRAPS
A. CONTRACTOR TO KEEP WEEKLY CHECKLIST LOGS FOR INSPECTIONS OF ALL SEDIMENT AND EROSION CONTROL DEVICES AND HAVE THEM READILY AVAILABLE ON–SITE AT ALL TIMES FOR INSPECTION BY MASSDEP LOCAL AUTHORITIES OR ENGINEER.

B. ALL SEDIMENT BASINS AND/OR SEDIMENT TRAPS SHALL BE INSPECTED FOLLOWING EACH RAINFALL. REPAIR OF SLOPES SHALL BE PROMPTLY MADE AS NEEDED.

C. SEDIMENT DEPOSITS SHALL BE REMOVED FROM SEDIMENT BASINS AND/OR SEDIMENT TRAPS WHEN THEY REACH A MAXIMUM HEIGHT OF ONE FOOT UNLESS OTHERWISE INDICATED ON THE EROSION CONTROL PLANS AND DETAILS TO BE AT A SPECIFIC ELEVATION PER CLEAN OUT MARKERS.

D. SEDIMENT SHALL BE DISPOSED OF ON–SITE OR AS DIRECTED BY THE ENGINEER AND LOCAL GOVERNING OFFICIALS. SEE SEDIMENT AND EROSION CONTROL NOTES HEREIN REGARDING DISPOSAL REQUIREMENTS FOR OFF SITE SPOIL DISPOSAL.

SEDIMENT AND EROSION CONTROL PLAN
1. COMPOST FILTER SOCKS WILL BE INSTALLED BEHIND THE SILTATION FENCE CLOSEST TO THE EXISTING WETLANDS AND SILTATION FENCE INSTALLED ALONG THE TOE OF ALL CRITICAL CUT AND FILL SLOPES.
2. CULVERT DISCHARGE AREAS WILL BE PROTECTED WITH RIP RAP CHANNELS. ENERGY DISSIPATORS WILL BE INSTALLED AS SHOWN ON THESE PLANS AND AS NECESSARY.
3. CATCH BASINS WILL BE PROTECTED WITH SILT SACKS THROUGHOUT THE CONSTRUCTION PERIOD AND UNTIL ALL DISTURBED AREAS ARE THOROUGHLY STABILIZED.
4. ALL SEDIMENT AND EROSION CONTROL MEASURES WILL BE INSTALLED IN ACCORDANCE WITH THE STANDARDS AND SPECIFICATIONS IN THE LATEST EDITION OF THE MASSACHUSETTS EROSION AND SEDIMENT CONTROL GUIDELINES FOR URBAN AND SUBURBAN AREAS.
5. SEDIMENT AND EROSION CONTROL MEASURES WILL BE INSTALLED PRIOR TO DEMOLITION AND/OR CONSTRUCTION WHENEVER POSSIBLE.
6. ALL CONTROL MEASURES WILL BE MAINTAINED IN EFFECTIVE CONDITION THROUGHOUT THE DEMOLITION AND CONSTRUCTION PERIOD UNTIL THE SITE IS DETERMINED TO BE STABILIZED BY THE AUTHORITY HAVING JURISDICTION.
7. ADDITIONAL CONTROL MEASURES WILL BE INSTALLED DURING THE CONSTRUCTION PERIOD, IF NECESSARY OR REQUIRED OR AS DIRECTED BY THE CIVIL ENGINEER OR BY THE AUTHORITY HAVING JURISDICTION.
8. SEDIMENT REMOVED FROM EROSION CONTROL STRUCTURES WILL BE DISPOSED IN A MANNER WHICH IS CONSISTENT WITH THE INTENT AND REQUIREMENTS OF THE SEDIMENT AND EROSION CONTROL PLANS, NOTES, AND DETAILS.
9. THE CONTRACTOR IS ASSIGNED THE RESPONSIBILITY FOR IMPLEMENTING THIS SEDIMENT AND EROSION CONTROL PLAN. THIS RESPONSIBILITY INCLUDES THE INSTALLATION AND MAINTENANCE OF CONTROL MEASURES, INFORMING ALL PARTIES ENGAGED ON THE CONSTRUCTION SITE OF THE REQUIREMENTS AND OBJECTIVES OF THE PLAN, NOTIFICATION OF THE MUNICIPALITY AND/OR COUNTY SOILS CONSERVATION DISTRICT AND/OR CONSERVATION COMMISSION OFFICE OR AUTHORITY HAVING JURISDICTION OF ANY TRANSFER OF THIS RESPONSIBILITY AND FOR CONVEYING A COPY OF THE SEDIMENT AND EROSION CONTROL PLAN IF THE TITLE TO THE LAND IS TRANSFERRED.

SEDIMENT AND EROSION CONTROL NOTES
1. THE SEDIMENT AND EROSION CONTROL PLAN IS ONLY INTENDED TO DESCRIBE THE SEDIMENT AND EROSION CONTROL TREATMENT FOR THIS SITE. SEE SEDIMENT AND EROSION CONTROL DETAILS AND CONSTRUCTION SEQUENCE. REFER TO SITE PLAN FOR GENERAL INFORMATION AND OTHER CONTRACT PLANS FOR APPROPRIATE INFORMATION.
2. THE CONTRACTOR IS RESPONSIBLE FOR IMPLEMENTING THIS SEDIMENT AND EROSION CONTROL PLAN. THIS RESPONSIBILITY INCLUDES THE PROPER INSTALLATION AND MAINTENANCE OF SEDIMENT AND EROSION CONTROL MEASURES, INFORMING ALL PARTIES ENGAGED WITH CONSTRUCTION ON THE SITE OF THE REQUIREMENTS AND OBJECTIVES OF THIS PLAN, INFORMING THE AUTHORITY HAVING JURISDICTION OR COUNTY SOILS CONSERVATION DISTRICT, INLAND WETLANDS AGENCY OR CONSERVATION COMMISSION OF ANY TRANSFER OF THIS RESPONSIBILITY, AND FOR CONVEYING A COPY OF THE SEDIMENT & EROSION CONTROL PLAN IF THE TITLE TO THE LAND IS TRANSFERRED.
3. AN EROSION CONTROL BOND MAY BE REQUIRED TO BE POSTED WITH THE TOWN OF HINGHAM TO ENSURE IMPLEMENTATION OF THE SEDIMENT AND EROSION CONTROL MEASURES. THE CONTRACTOR SHALL BE RESPONSIBLE FOR THE POSTING OF THIS BOND AND FOR INQUIRIES TO THE TOWN OF HINGHAM FOR INFORMATION ON THE METHOD, TYPE AND AMOUNT OF THE BOND POSTING UNLESS OTHERWISE DIRECTED BY THE OWNER.
4. VISUAL SITE INSPECTIONS SHALL BE CONDUCTED WEEKLY, AND AFTER EACH MEASURABLE PRECIPITATION EVENT OF 0.25 INCHES OR GREATER BY QUALIFIED PERSONNEL, TRAINED AND EXPERIENCED IN SEDIMENT AND EROSION CONTROL, TO ASCERTAIN THAT THE SEDIMENT AND EROSION CONTROL (E&S) BMPS ARE OPERATIONAL AND EFFECTIVE IN PREVENTING POLLUTION. A WRITTEN REPORT OF EACH INSPECTION SHALL BE KEPT, AND INCLUDE:
A)A SUMMARY OF THE SITE CONDITIONS, E&S BMPS, AND COMPLIANCE; AND
B)THE DATE, TIME, AND THE NAME OF THE PERSON CONDUCTING THE INSPECTION
5. THE CONTRACTOR SHALL CONSTRUCT ALL SEDIMENT AND EROSION CONTROLS IN ACCORDANCE WITH THE LATEST EDITION OF THE MASSACHUSETTS EROSION AND SEDIMENT CONTROL GUIDELINES FOR URBAN AND SUBURBAN AREAS IN ACCORDANCE WITH THE CONTRACT DOCUMENTS, AND AS DIRECTED BY THE MUNICIPALITY AND/OR COUNTY SOILS CONSERVATION DISTRICT AND/OR CONSERVATION COMMISSION. THE CONTRACTOR SHALL KEEP A COPY OF THE GUIDELINES ON–SITE FOR REFERENCE DURING CONSTRUCTION.
6. ADDITIONAL AND/OR ALTERNATIVE SEDIMENT AND EROSION CONTROL MEASURES MAY BE INSTALLED DURING THE CONSTRUCTION PERIOD IF FOUND NECESSARY BY THE CONTRACTOR, OWNER, SITE ENGINEER, MUNICIPALITY AND/OR COUNTY SOILS CONSERVATION DISTRICT AND/OR CONSERVATION COMMISSION, OR OTHER GOVERNING AGENCIES. THE CONTRACTOR SHALL CONTACT THE OWNER AND APPROPRIATE GOVERNING AGENCIES FOR APPROVAL IF ALTERNATIVE CONTROLS OTHER THAN THOSE SHOWN ON THE PLANS ARE PROPOSED.
7. THE CONTRACTOR SHALL INSPECT ALL SEDIMENT AND EROSION CONTROLS BEFORE AND AFTER EACH STORM (0.25 INCHES OR GREATER RAINFALL), OR AT LEAST WEEKLY, TO VERIFY THAT THE CONTROLS ARE OPERATING PROPERLY AND MAKE REPAIRS WHERE NECESSARY.
8. THE CONTRACTOR SHALL KEEP A SUPPLY OF SEDIMENT AND EROSION CONTROL MATERIAL (HAY BALES, SILT FENCE, JUTE MESH, RIP RAP, ETC.) ON–SITE FOR MAINTENANCE AND EMERGENCY REPAIRS.
9. PROTECT EXISTING TREES THAT ARE TO BE SAVED BY FENCING AT THE DRIP LINE OR AS SHOWN WITH SNOW FENCE, ORANGE SAFETY FENCE, OR EQUIVALENT FENCING. ANY LIMB TRIMMING SHOULD BE DONE BEFORE CONSTRUCTION BEGINS IN THAT AREA; FENCING SHALL BE MAINTAINED AND REPAIRED DURING CONSTRUCTION.
10. INSTALL PERIMETER SEDIMENT AND EROSION CONTROLS PRIOR TO CLEARING OR CONSTRUCTION. ALL CONSTRUCTION SHALL BE CONTAINED WITHIN THE LIMIT OF DISTURBANCE, WHICH SHALL BE MARKED WITH SILT FENCE, SAFETY FENCE, COMPOST FILTER SOCKS, RIBBONS, OR OTHER MEANS PRIOR TO CLEARING. CONSTRUCTION ACTIVITY SHALL REMAIN ON THE UPHILL SIDE OF THE SILT FENCE UNLESS WORK IS SPECIFICALLY CALLED FOR ON THE DOWNHILL SIDE OF THE FENCE.
11. STONE CONSTRUCTION ENTRANCE ANTI–TRACKING PADS SHALL BE INSTALLED AT START OF CONSTRUCTION AND MAINTAINED THROUGHOUT THE DURATION OF CONSTRUCTION. THE LOCATION OF THE TRACKING PADS MAY CHANGE AS VARIOUS PHASES OF CONSTRUCTION ARE COMPLETED.
12. TOPSOIL SHALL BE STRIPPED AND STOCKPILED FOR USE IN FINAL LANDSCAPING. ALL EARTH STOCKPILES SHALL HAVE HAY BALES OR SILT FENCE AROUND THE LIMIT OF PILE. PILES SHALL BE TEMPORARILY SEEDED IF PILE IS TO REMAIN IN PLACE FOR MORE THAN ONE (1) MONTH.
13. SEDIMENT BASINS AND SEDIMENT TRAPS SHALL PROVIDE 134 CUBIC YARDS OF SEDIMENT STORAGE PER ACRE CONTRIBUTING TO THE BASIN. PROVIDE BASIN VOLUMES FOR ALL DISTURBANCE ON SITE.
14. COMPLY WITH REQUIREMENTS OF NPDES GENERAL PERMIT FOR CONSTRUCTION DEWATERING ACTIVITY DISCHARGES, FOR STORMWATER DISCHARGE FROM CONSTRUCTION ACTIVITIES AND WITH MASSACHUSETTS DEP RECORD KEEPING AND INSPECTION REQUIREMENTS.
15. STONE CONSTRUCTION ENTRANCE ANTI–TRACKING PADS SHALL BE INSTALLED PRIOR TO ANY ON SITE EXCAVATION AND SHALL BE MAINTAINED DURING ALL DEMOLITION, EXCAVATION AND CONSTRUCTION ACTIVITIES.
16. MINIMIZE LAND DISTURBANCES. SEED AND MULCH DISTURBED AREAS WITH TEMPORARY MIX AS SOON AS PRACTICABLE (ONE WEEK MAXIMUM UNSTABILIZED PERIOD) USING PERENNIAL RYEGRASS AT 40 LBS PER ACRE. MULCH ALL CUT AND FILL SLOPES AND SWALES WITH LOOSE HAY AT A RATE OF 2 TONS PER ACRE. IF NECESSARY, REPLACE LOOSE HAY ON SLOPES WITH EROSION CONTROL BLANKETS OR JUTE CLOTH. MODERATELY GRADED AREAS, ISLANDS, AND TEMPORARY CONSTRUCTION STAGING AREAS MAY BE HYDROSEEDED WITH TACKIFIER.
17. MAINTAIN EXISTING PAVED AREAS FOR CONSTRUCTION STAGING FOR AS LONG AS POSSIBLE.
18. SILT FENCE AND OTHER SEDIMENT AND EROSION CONTROL MEASURES SHALL BE INSTALLED IN ACCORDANCE WITH CONTRACT DRAWINGS AND MANUFACTURER'S RECOMMENDATIONS PRIOR TO WORK IN ANY UPLAND AREAS.
19. EXCAVATED MATERIAL FROM TEMPORARY SILT TRAPS MUST BE STOCKPILED ON UPHILL SIDE OF SILT FENCE.
20. INSTALL SILT FENCE ACCORDING TO MANUFACTURER'S INSTRUCTION, PARTICULARLY, BURY LOWER EDGE OF FABRIC INTO GROUND. SILT FENCE SHALL BE TENCATE ENVIROFENCE, PROPEX GEOTEX OR EQUIVALENT APPROVED BY THE CIVIL ENGINEER. FILTER FABRIC USED SHALL BE TENCATE 140N OR 170N, OR APPROVED EQUIVALENT. SEE SPECIFICATIONS FOR FURTHER INFORMATION.
21. INSTALL COMPOST FILTER SOCKS ACCORDING TO MANUFACTURER'S INSTRUCTIONS, PARTICULARLY, PLACE THE FILTER SOCKS BEHIND THE SILT FENCE AND PLACE THE FILTER MEDIA ON THE SIDE OF THE SILT FENCE. IF NECESSARY, PLACE 2" X 2" X 36" WOODEN STAKES THROUGH THE CENTER OF THE FILTER SOCKS EVERY 10'. MAKE SURE THAT 1' OF THE WOODEN STAKE IS BELOW THE GROUND SURFACE. FILTER SOCK MATERIAL AND MEDIA SHALL BE FROM FILTREXX OR APPROVED EQUAL AS DETERMINED BY THE CIVIL ENGINEER. SEE SPECIFICATIONS FOR FURTHER DETAILS.
22. WHERE INDICATED ON SEDIMENT AND EROSION CONTROL PLANS USE NEW HAY/STRAW BALES AND REPLACE THEM WHENEVER THEIR CONDITION DETERIORATES BEYOND REASONABLE USABILITY. STAKE BALES SECURELY INTO GROUND AND BUTT TIGHTLY TOGETHER TO PREVENT UNDERCUTTING AND BYPASSING.
23. INSTALL TEMPORARY DIVERSION DITCHES, PLUNGE POOLS, SEDIMENT BASINS, SEDIMENT TRAPS, CONCRETE WASH PITS AND DEWATERING PITS AS SHOWN AND AS NECESSARY DURING VARIOUS PHASES OF CONSTRUCTION TO CONTROL RUNOFF UNTIL UPHILL AREAS ARE DETERMINED TO BE STABILIZED BY THE AUTHORITY HAVING JURISDICTION. LOCATION OF TEMPORARY SEDIMENT BASINS WILL REQUIRE REVIEW AND APPROVAL BY THE CIVIL ENGINEER AND AUTHORITY HAVING JURISDICTION.
24. DIRECT ALL DEWATERING PUMP DISCHARGE TO A SEDIMENT CONTROL DEVICE SUCH AS TEMPORARY PITS, SEDIMENT TRAP, SEDIMENT BASINS OR GRASS FILTERS WITHIN THE APPROVED LIMIT OF DISTURBANCE. DISCHARGE TO STORM DRAINAGE SYSTEM OR SURFACE WATERS FROM SEDIMENT CONTROLS SHALL BE CLEAR.
25. SWEEP AFFECTED PORTIONS OF OFF SITE ROADS ONE OR MORE TIMES A DAY (OR LESS FREQUENTLY IF TRACKING IS NOT A PROBLEM) DURING CONSTRUCTION. OTHER DUST CONTROL MEASURES TO BE USED AS NECESSARY INCLUDE WATERING DOWN DISTURBED AREAS, USING CALCIUM CHLORIDE, AND COVERING LOADS ON DUMP TRUCKS.
26. PERIODICALLY CHECK ACCUMULATED SEDIMENT LEVELS IN THE SEDIMENT BASINS AND SEDIMENT TRAPS DURING CONSTRUCTION AND CLEAN ACCUMULATED SILT WHEN NECESSARY OR WHEN ONE FOOT OF SEDIMENT HAS ACCUMULATED OR PER SPECIFIC CLEANOUT MARKER ELEVATION. CLEAN ACCUMULATED SEDIMENT FROM CATCH BASIN SUMPS AS NECESSARY AND AS DIRECTED BY THE CIVIL ENGINEER OR OWNER'S CONSTRUCTION REPRESENTATIVE. REMOVE ACCUMULATED SEDIMENT FROM BEHIND COMPOST FILTER SOCKS AND SILT FENCE WHEN LEVEL REACHES HALF THE HEIGHT OF THE FILTER SOCK OR ONE FOOT AT SILT FENCE. DISPOSE OF SEDIMENT LEGALLY EITHER ON OR OFF SITE.
27. IMMEDIATELY UPON DISCOVERING UNFORESEEN CIRCUMSTANCES POSING THE POTENTIAL FOR ACCELERATED EROSION AND/OR SEDIMENT POLLUTION, THE OPERATOR SHALL IMPLEMENT APPROPRIATE BEST MANAGEMENT PRACTICES TO ELIMINATE THE POTENTIAL FOR ACCELERATED EROSION AND/OR SEDIMENT POLLUTION.
28. ALL PUMPING OF SEDIMENT LADEN WATER SHALL BE THROUGH A SEDIMENT CONTROL BMP, SUCH AS A PUMPED WATER FILTER BAG OR EQUIVALENT SEDIMENT REMOVAL FACILITY, OVER UNDISTURBED VEGETATED AREAS.
29. ALL EXCAVATED MATERIAL SHALL BE PLACED ON THE HIGH SIDE OF UTILITY AND STORM PIPE TRENCHES SO AS TO ALLOW THE TRENCH TO INTERCEPT ALL SILT LADEN RUNOFF.
30. CONTRACTOR SHALL ONLY EXCAVATE AS MUCH UTILITY AND STORM PIPE TRENCH WORK AS CAN BE COMPLETED, BACKFILLED AND STABILIZED IN ONE DAY SO AS TO LIMIT THE AMOUNT OF OPEN, DISTURBED TRENCHING.
31. ANY STOCKPILES OF STRIPPED MATERIALS ARE TO BE PERIODICALLY SPRAYED WITH WATER OR A CRUSTING AGENT TO STABILIZE POTENTIALLY WIND–BLOWN MATERIAL. HAUL ROADS BOTH INTO AND AROUND THE SITE ARE TO BE SPRAYED AS NEEDED TO SUPPRESS DUST. TRUCKS HAULING IMPORT FILL MATERIAL ARE TO BE TARPED TO AID IN THE CONTROL OF AIRBORNE DUST. DURING HIGH WIND EVENTS (20 TO 30 MPH SUSTAINED) CONSTRUCTION ACTIVITY SHALL BE LIMITED OR CEASED IF DUST CANNOT BE CONTROLLED BY WETTING.
32. BLOCK END OF STORM SEWERS IN EXPOSED TRENCHES WITH BOARDS AND SANDBAGS AT THE END OF EACH WORKING DAY WHEN RAIN IS EXPECTED.
33. AN AREA SHALL BE CONSIDERED TO HAVE ACHIEVED FINAL STABILIZATION WHEN IT HAS A MINIMUM OF 70% UNIFORM PERENNIAL VEGETATIVE COVER OR OTHER PERMANENT NON–VEGETATIVE COVER WITH A DENSITY SUFFICIENT TO RESIST ACCELERATED SURFACE EROSION AND SUBSURFACE CHARACTERISTICS SUFFICIENT TO RESIST SLIDING OR OTHER MOVEMENTS UNLESS OTHERWISE DETERMINED BY THE AUTHORITY HAVING JURISDICTION.
34. MAINTAIN ALL PERMANENT AND TEMPORARY EROSION AND SEDIMENT CONTROL DEVICES IN EFFECTIVE CONDITION THROUGHOUT THE CONSTRUCTION PERIOD. UPON COMPLETION OF WORK SWEEP PARKING LOT AND REMOVE ALL TEMPORARY EROSION AND SEDIMENT CONTROLS WHEN AUTHORIZED BY AUTHORITY HAVING JURISDICTION. FILE NOT (NOTICE OF TERMINATION) WITH AUTHORITY HAVING JURISDICTION RESPONSIBLE FOR REGULATING STORM WATER DISCHARGES FROM CONSTRUCTION ACTIVITIES PER NPDES.

FOR PERMITTING PURPOSES ONLY
NOT RELEASED FOR CONSTRUCTION

Architecture
Engineering
Environmental
Land Surveying

BL Companies

355 Research Parkway
Meriden, CT 06450
(203) 630-1406
(203) 630-2615 Fax

COMMONWEALTH OF MASSACHUSETTS
ROBERT M. BOLES
CIVIL
No. 54612
REGISTERED PROFESSIONAL ENGINEER

PROPOSED DEVELOPMENT
100 INDUSTRIAL PARK ROAD
HINGHAM, MASSACHUSETTS

REVISIONS

No.	Date	Desc.
1.	05/12/2020	Revised per Staff and Commission Comments
3.	07/13/2020	Revised per Staff and Commission Comments

Designed	P.G.M.
Drawn	P.G.M.
Reviewed	
Scale	NONE
Project No.	1901517
Date	03/06/2020
CAD File:	EC190151701

Title
SEDIMENT AND EROSION CONTROL NOTES

Sheet No.
EC-3

Xref (s): ; BD190151701 ; XY190151701 ; XC190151701 ; XL190151701 ; XC190151701 ; XC190151702 ; XC190151703 ; XE190151701 ; XC190151704

Jul 13, 2020 8:10pm aklose G:\JOBS19\14\1901517\DWG\EC190151701.dwg
Layout: EC-3 24x36 G:\JOBS19\14\1901517\DWG\EC190151701.DWG.EC-3 24X36.

© 2020 BL COMPANIES, INC. THESE DRAWINGS SHALL NOT BE UTILIZED BY ANY PERSON, FIRM OR CORPORATION WITHOUT THE SPECIFIC WRITTEN PERMISSION OF BL COMPANIES.

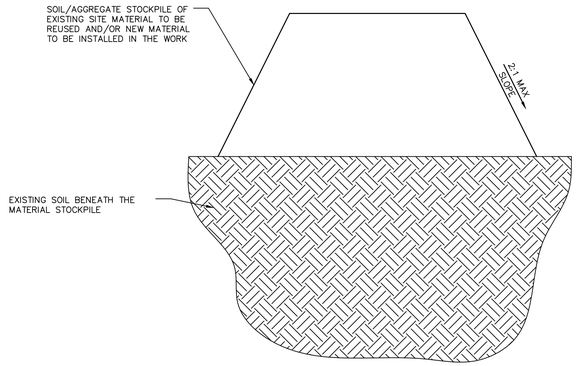

MATERIALS STOCKPILE DETAIL

N.T.S. BLEC-006

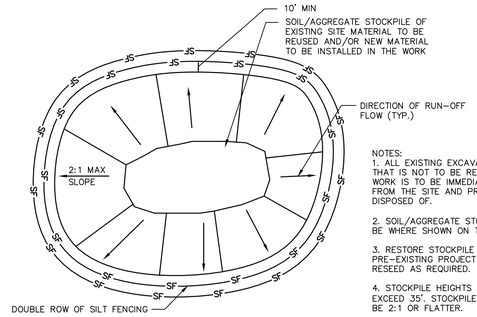

NOTES:
1. ALL EXISTING EXCAVATED MATERIAL THAT IS NOT TO BE REUSED IN THE WORK IS TO BE IMMEDIATELY REMOVED FROM THE SITE AND PROPERLY DISPOSED OF.

2. SOIL/AGGREGATE STOCKPILE SITES TO BE WHERE SHOWN ON THE DRAWINGS.

3. RESTORE STOCKPILE SITES TO PRE-EXISTING PROJECT CONDITION AND RESEED AS REQUIRED.

4. STOCKPILE HEIGHTS MUST NOT EXCEED 35'. STOCKPILE SLOPES MUST BE 2:1 OR FLATTER.

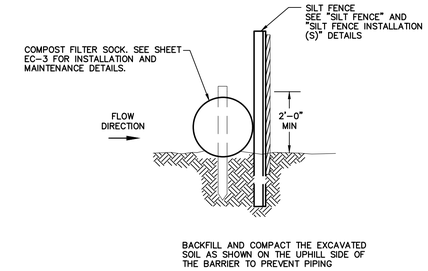

FILTER SOCK WITH SILT FENCE BACKING

N.T.S.

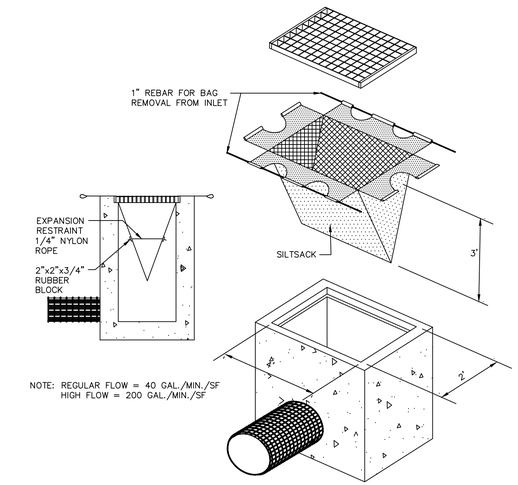

SILTSACK DETAIL

N.T.S. BLEC-005

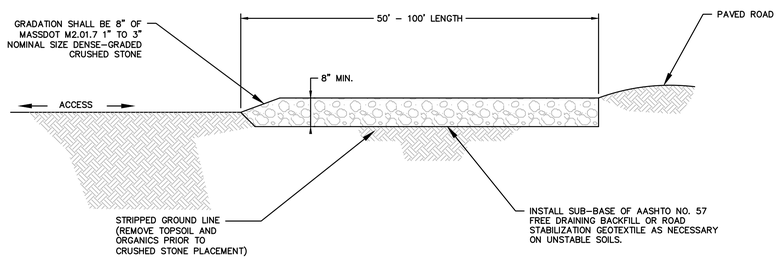

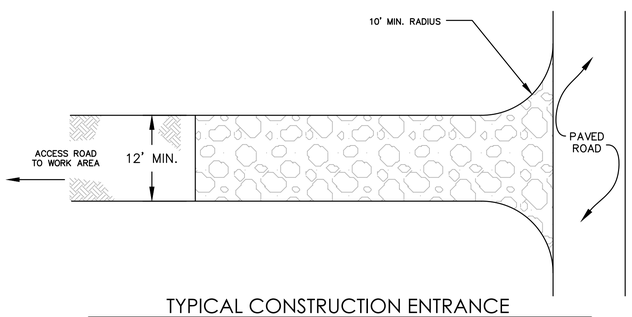

TYPICAL CONSTRUCTION ENTRANCE

N.T.S.

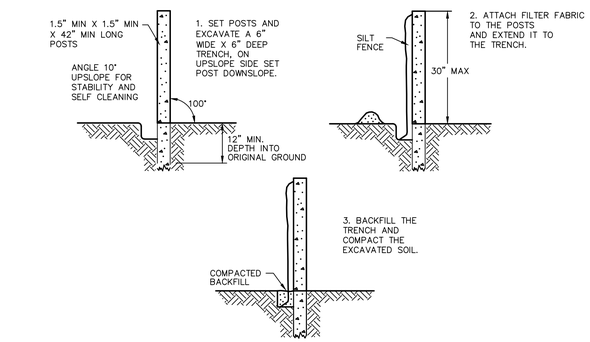

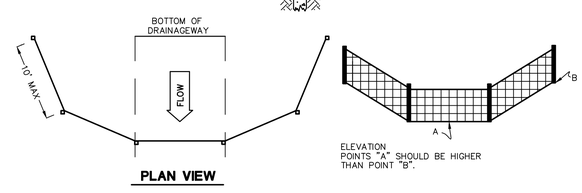

PLAN VIEW

SILT FENCE BARRIER

N.T.S.

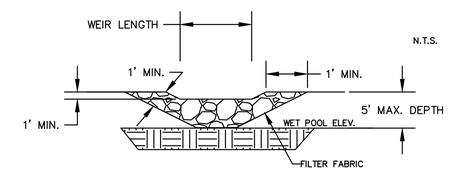

N.T.S.

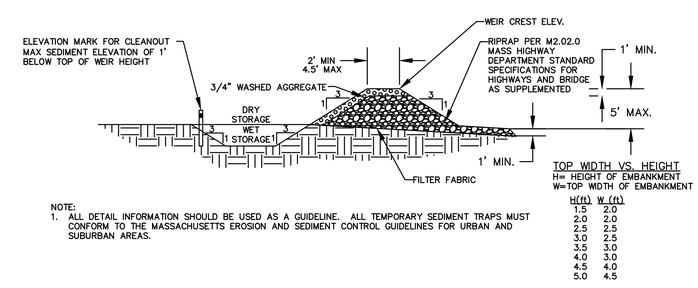

TOP WIDTH VS. HEIGHT
H= HEIGHT OF EMBANKMENT
W=TOP WIDTH OF EMBANKMENT

H(ft)	W (ft)
1.5	2.0
2.0	2.0
2.5	2.5
3.0	2.5
3.5	3.0
4.0	3.0
4.5	4.0
5.0	4.5

NOTE:
1. ALL DETAIL INFORMATION SHOULD BE USED AS A GUIDELINE. ALL TEMPORARY SEDIMENT TRAPS MUST CONFORM TO THE MASSACHUSETTS EROSION AND SEDIMENT CONTROL GUIDELINES FOR URBAN AND SUBURBAN AREAS.

TEMPORARY SEDIMENT TRAP

N.T.S. BLEC-002

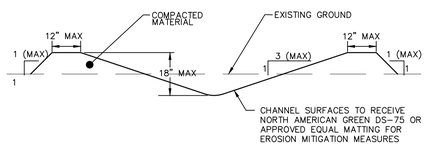

NON-ENGINEERED TEMPORARY DIVERSION SWALE DETAIL

N.T.S.

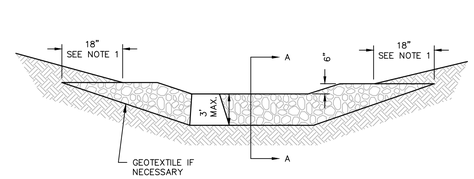

VIEW LOOKING UPSTREAM
(NOT TO SCALE)

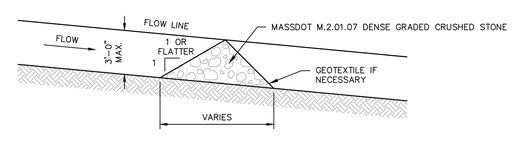

SECTION A-A
(NOT TO SCALE)

NOTES:
1) KEY STONE INTO THE DITCH BANKS AND EXTEND INTO THE ABUTMENTS A MINIMUM OF 18" TO PREVENT FLOW FROM FLANKING THE CHECK DAM.

2) THE MINIMUM DESIGN CAPACITY SHALL CONVEY A 2 YEAR - 24 HOUR PEAK FLOW.

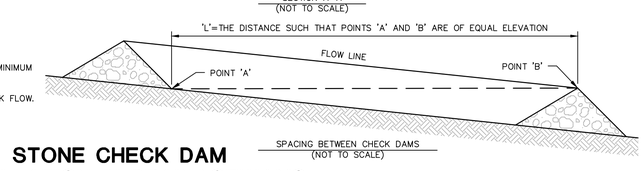

SPACING BETWEEN CHECK DAMS
(NOT TO SCALE)

STONE CHECK DAM INSTALLATION IN DRAINAGEWAYS

N.T.S.

SEE SHEET EC-3 FOR SEDIMENT AND EROSION CONTROL NOTES

FOR PERMITTING PURPOSES ONLY
NOT RELEASED FOR CONSTRUCTION

Architecture
Engineering
Environmental
Land Surveying
BL Companies
355 Research Parkway
Meriden, CT 06450
(203) 630-1406
(203) 630-2615 Fax

COMMONWEALTH OF MASSACHUSETTS
ROBERT M. BOLER
CIVIL
No. 54612
REGISTERED PROFESSIONAL ENGINEER

PROPOSED DEVELOPMENT
100 INDUSTRIAL PARK ROAD
HINGHAM, MASSACHUSETTS

REVISIONS

No.	Date	Desc.
1.	05/12/2020	Revised per Staff and Commission Comments
3.	07/13/2020	Revised per Staff and Commission Comments

Designed	P.G.M.
Drawn	P.G.M.
Reviewed	
Scale	NONE
Project No.	1901517
Date	03/06/2020

CAD File: EC190151701

Title
SEDIMENT AND EROSION CONTROL DETAILS

Sheet No.
EC-4

Xref (s): : B:\1901517\01 ; X:Y190151701 ; XC190151701 ; XL190151702 ; XC190151703 ; XE190151701 ; XC190151704

Jul 13, 2020-8:10pm aldoss G:\JOBS\1N L\A\190151701\DWG\EC190151701.dwg
Layout: EC-4 Model: EC-4 User: aldoss Xref: G:\JOBS\1N L\A\190151701\DWG\EC190151701.dwg

© 2020 BL COMPANIES, INC. THESE DRAWINGS SHALL NOT BE UTILIZED BY ANY PERSON, FIRM OR CORPORATION WITHOUT THE SPECIFIC WRITTEN PERMISSION OF BL COMPANIES.

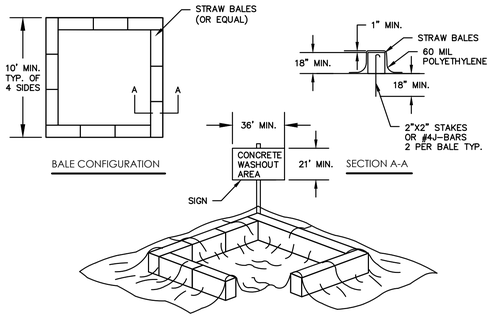

CONCRETE WASH PIT

N.T.S

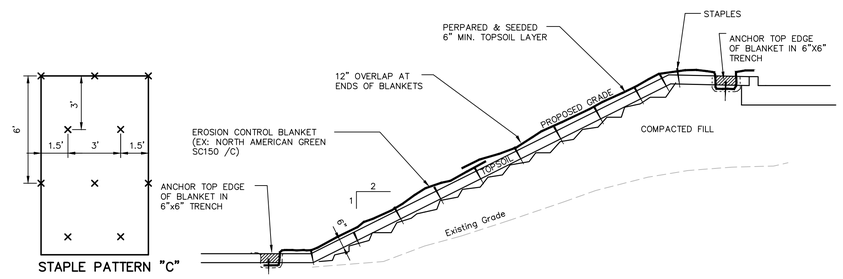

BLANKET ON FILL SLOPE

N.T.S. BLEC-009

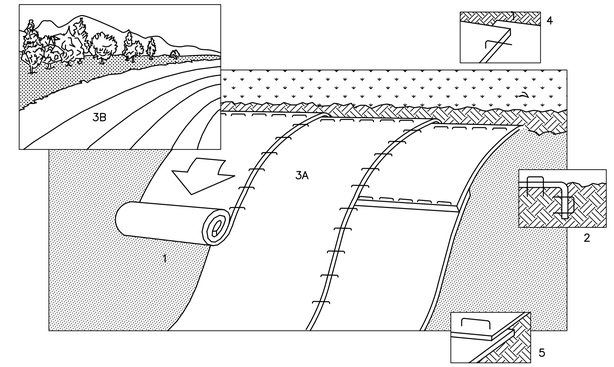

1. PREPARE SOIL BEFORE INSTALLING BLANKETS, INCLUDING APPLICATION OF LIME, FERTILIZER,AND SEED.

2. BEGIN AT THE TOP OF THE SLOPE BY ANCHORING THE BLANKET IN 6" DEEP X 6" WIDE TRENCH. BACKFILL AND COMPACT THE TRENCH AFTER STAPLING.

3. ROLL THE BLANKETS (A.) DOWN OR (B.) HORIZONTALLY ACROSS THE SLOPE.

4. THE EDGES OF PARALLEL BLANKETS MUST BE STAPLED WITH APPROXIMATELY 2" OVERLAP.

5. WHEN BLANKETS MUST BE SPLICED DOWN THE SLOPE, PLACE BLANKETS END OVER END (SHINGLE STYLE) WITH APPROXIMATELY 4" OVERLAP. STAPLE THROUGH OVERLAPPED AREA, APPROXIMATELY 12" APART.

SLOPE STABILIZATION DETAIL

N.T.S. BLEC-010

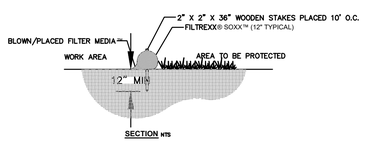

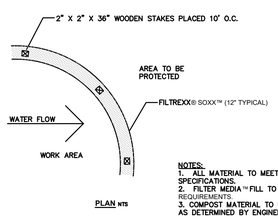

NOTES:
1. ALL MATERIAL TO MEET FILTREXX® SPECIFICATIONS.
2. FILTER MEDIA™ FILL TO MEET APPLICATION REQUIREMENTS.
3. COMPOST MATERIAL TO BE DISPERSED ON SITE, AS DETERMINED BY ENGINEER.

FILTREXX® SEDIMENT CONTROL FILTER SOCK OR APPROVED EQUAL

NTS

SEE SHEET EC-3 FOR SEDIMENT AND EROSION CONTROL NOTES

FOR PERMITTING PURPOSES ONLY
NOT RELEASED FOR CONSTRUCTION

Architecture
Engineering
Environmental
Land Surveying

BL Companies

355 Research Parkway
Meriden, CT 06450
(203) 630-1406
(203) 630-2615 Fax

COMMONWEALTH OF MASSACHUSETTS
ROBERT M. BOLER
No. 54612
REGISTERED PROFESSIONAL ENGINEER

PROPOSED DEVELOPMENT
100 INDUSTRIAL PARK ROAD
HINGHAM, MASSACHUSETTS

REVISIONS

No.	Date	Desc.
1.	05/12/2020	Revised per Staff and Commission Comments
3.	07/13/2020	Revised per Staff and Commission Comments

Designed	P.G.M.
Drawn	P.G.M.
Reviewed	
Scale	NONE
Project No.	1901517
Date	03/06/2020

CAD File: EC190151701

Title
SEDIMENT AND EROSION CONTROL DETAILS

Sheet No.
EC-5

Xref (s): BD190151701 ; XY190151701 ; XC190151701 ; XL190151701 ; XC190153702 ; XC190153703 ; XE190153701 ; XC190151704

Jul 13, 2020-8:13pm; cafaos; G:\JOBS1\P\14\190151\DWG\EC190153701.dwg
Layout: EC-5 Model: EC-5 ; Xref: XY190151701;XC190151701;XC190153702;XC190153703;XE190153701;XC190151704

© 2020 BL COMPANIES, INC. THESE DRAWINGS SHALL NOT BE UTILIZED BY ANY PERSON, FIRM OR CORPORATION WITHOUT THE SPECIFIC WRITTEN PERMISSION OF BL COMPANIES.

ZONING INFORMATION

LOCATION: HINGHAM			
ZONE: IP (INDUSTRIAL PARK) & S. HINGHAM DEVELOPMENT ZONING OVERLAY			
USE: WAREHOUSE (PERMITTED USE)			
ITEM #	ITEM	REQUIREMENTS	PROPOSED
1	PARKING LOT LANDSCAPING (SECTION V-5.M.)	ONE (1) TREE (MIN. 3" CAL) AND ADDITIONAL UNDERSTORY PLANTINGS PER TEN (10) PARKING SPACES (460 SPACES (AUTO & VAN) / 10 = 46 TREES REQ.) PARKING AREAS ADJACENT TO PUBLIC RIGHT-OF-WAY SHALL BE SCREENED	EXISTING TREES TO REMAIN ALONG PARKING LOT PERIMETER: 23+ TREES PROPOSED: 23 TREES TOTAL: 46+ TREES EXISTING VEGETATION ALONG INDUSTRIAL PARK ROAD AND COMMERCE ROAD TO REMAIN. SUPPLEMENTED ALONG COMMERCE ROAD AT PREVIOUS DRIVE LOCATION.
2	LOT AREA COVERAGE (SECTION IV-B.2.)	A MINIMUM OF 15% OF THE AREA OF EACH LOT SHALL NOT BE BUILT UPON, PAVED OR PARKED UPON, AND SHALL BE MAINTAINED EITHER IN ITS NATURAL STATE OR LANDSCAPED	246,573 SF UNPAVED AREA (LANDSCAPED AND NATURAL)/742,680 SF LOT AREA = 33.2%
3	LANDSCAPE FRONTAGE (SECTION IV-B.2)	ALONG THE ENTIRE STREET FRONTAGE OF EACH LOT A GREEN OR LANDSCAPED STRIP NOT LESS THAN 15' WIDE SHALL BE MAINTAINED IN ITS NATURAL STATE OR LANDSCAPED WITH GRASS, TREES AND SHRUBS, NOT PAVED EXCEPT FOR DRIVEWAYS, NOT PARKED UPON AND NOT BUILT UPON EXCEPT FOR SIGNS. THE REQUIRED 15% MAY INCLUDE THE 15' GREEN STRIP.	>15 FEET

LANDSCAPE PLANT SCHEDULE

KEY	QTY	BOTANICAL NAME	COMMON NAME	ROOT	SIZE	COMMENTS
PARKING LOT - DECIDUOUS TREES						
AR	5	Acer rubrum 'Franksred'	Red Sunset Red Maple	B&B	3" CAL. MIN.	6' BRANCH HT. MIN.
GT	18	Gleditsia triacanthos var. inermis 'Shademaster'	Shademaster Honeylocust	B&B	3" CAL. MIN.	6' BRANCH HT. MIN.
TOTAL	23					
ORNAMENTAL TREES						
CF	2	Cornus florida 'Cherokee Princess'	Cherokee Princess Flowering Dogwood	B&B	2" CAL. MIN.	
EVERGREEN TREES						
PS	9	Pinus strobus	Eastern White Pine	B&B	7'-8' HT.	
SHRUBS, GRASSES, AND GROUNDCOVERS						
AM	75	Aronia melanocarpa 'UCONNAM165'	Low Scape Mound Chokeberry	CONT.	12" HT. MIN.	PLANT 36" O.C.
IG	60	Ilex glabra 'Shamrock'	Shamrock Inkberry	CONT.	30" HT. MIN.	PLANT 4' O.C.
PV	40	Panicum virgatum 'Shenandoah'	Shenandoah Switchgrass	CONT.	24" HT. MIN.	PLANT 36" O.C.
RA	130	Rhus aromatica 'Gro-low'	Gro-low Sumac	CONT.	12" HT. MIN.	PLANT 36" O.C.

NOTES:
1) ALL SUBSTITUTIONS MUST RECEIVE APPROVAL FROM THE LANDSCAPE ARCHITECT PRIOR TO DELIVERY TO SITE.

2) PROVIDE AND INSTALL ALL PLANTS SHOWN ON THE PLANTING PLAN DRAWINGS; THE QUANTITIES IN THE PLANT LIST ARE PROVIDED FOR THE CONTRACTOR'S CONVENIENCE ONLY. IF DISCREPANCIES OCCUR, THE LARGER QUANTITY SHALL APPLY.

3) IF THERE IS A DISCREPANCY BETWEEN BOTANICAL AND COMMON NAME, BOTANICAL NAME PREVAILS.

4) FOR DETENTION BASIN PLANTING, REFER TO SHEET LL-3

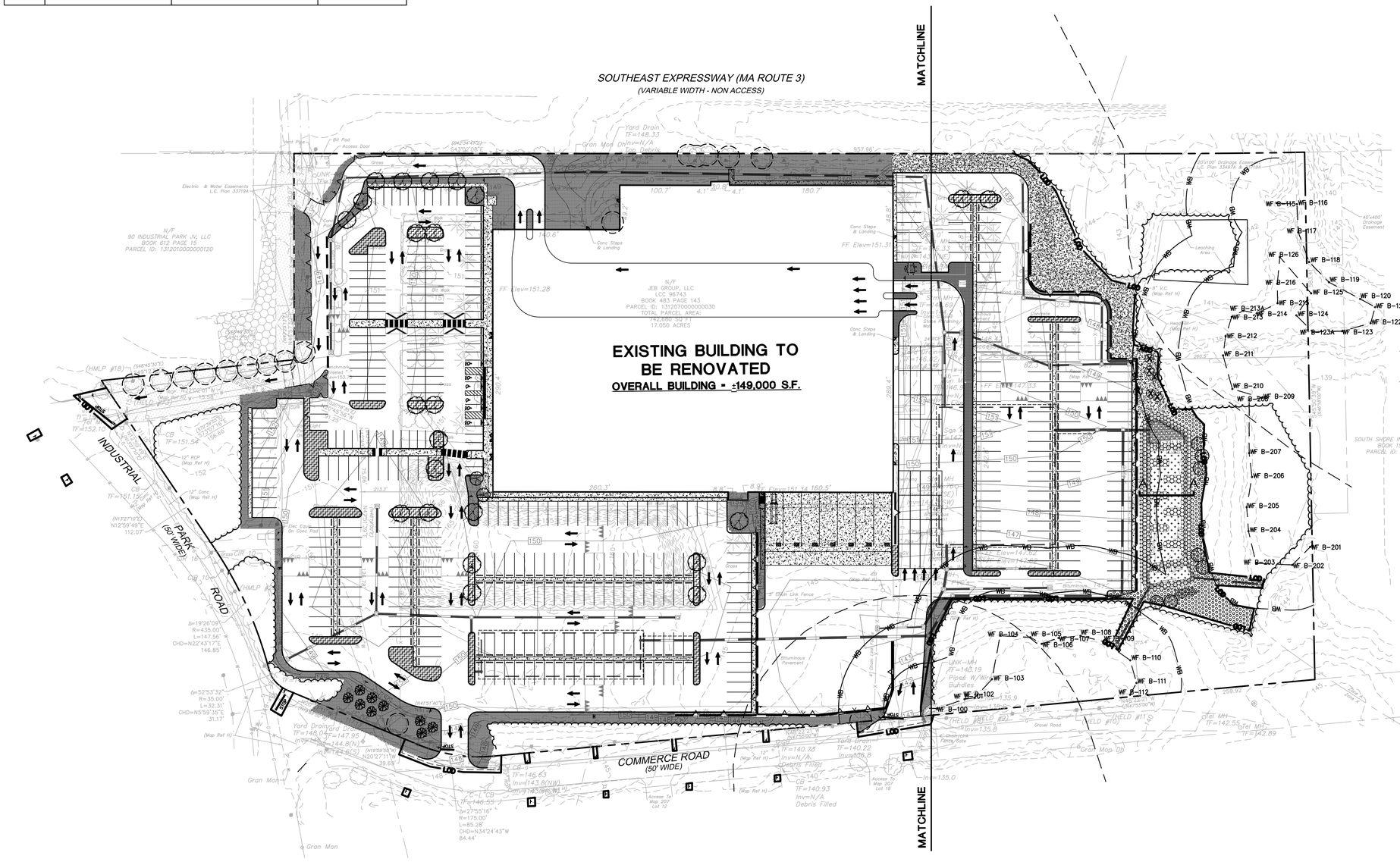

LANDSCAPE KEY

- PROVIDE AND INSTALL DECIDUOUS SHADE TREE
- PROVIDE AND INSTALL FLOWERING TREE
- PROVIDE AND INSTALL EVERGREEN TREE
- PROVIDE AND INSTALL LAWN SEED MIX
- PROVIDE AND INSTALL SHRUBS & GROUNDCOVER PLANTINGS
- PROVIDE AND INSTALL CONSERVATION SEED MIX
- PROVIDE AND INSTALL IMPERMEABLE LINER BELOW LANDSCAPE ISLAND
- DETENTION BASIN SIDE SLOPE PLANTING AREA
- BASIN BOTTOM PLANTING AREA
- SUPPLEMENTAL BUFFER PLANTINGS
- WB — 50' AND 100' WETLAND BUFFERS
- PROPOSED TREE LINE

GRAPHIC SCALE
60 30 0 60
SCALE IN FEET

SEE SHEET LL-3 FOR LANDSCAPE DETAILS AND NOTES

SEE SHEET GN-1 FOR SITEWORK GENERAL NOTES

FOR PERMITTING PURPOSES ONLY NOT RELEASED FOR CONSTRUCTION

Architecture
Engineering
Environmental
Land Surveying
BL Companies
355 Research Parkway
Meriden, CT 06450
(203) 630-1406
(203) 630-2615 Fax

PROPOSED DEVELOPMENT
100 INDUSTRIAL PARK ROAD
HINGHAM, MASSACHUSETTS

REVISIONS

No.	Date	Desc.
1.	05/12/2020	Revised per Staff and Commission Comments
2.	06/01/2020	Revised per Staff and Commission Comments
3.	07/13/2020	Revised per Planning and Peer Review Comments

Designed	W.E.V.
Drawn	W.E.V.
Reviewed	
Scale	1"=60'
Project No.	1901517
Date	03/06/2020
CAD File: LL190151701	

Title

OVERALL LANDSCAPE PLAN

Sheet No.

LL-0

© 2020 BL COMPANIES, INC. THESE DRAWINGS SHALL NOT BE UTILIZED BY ANY PERSON, FIRM OR CORPORATION WITHOUT THE SPECIFIC WRITTEN PERMISSION OF BL COMPANIES.

Jul 13, 2020,8:11pm cdaboe G:\JOBS19\1401901517\DWG\LL190151701.dwg
Layout: LL-0 Model: BL-Bigboy11x17(20120)-Landscape(1in=60ft)1001-Overall LANDSCAPE

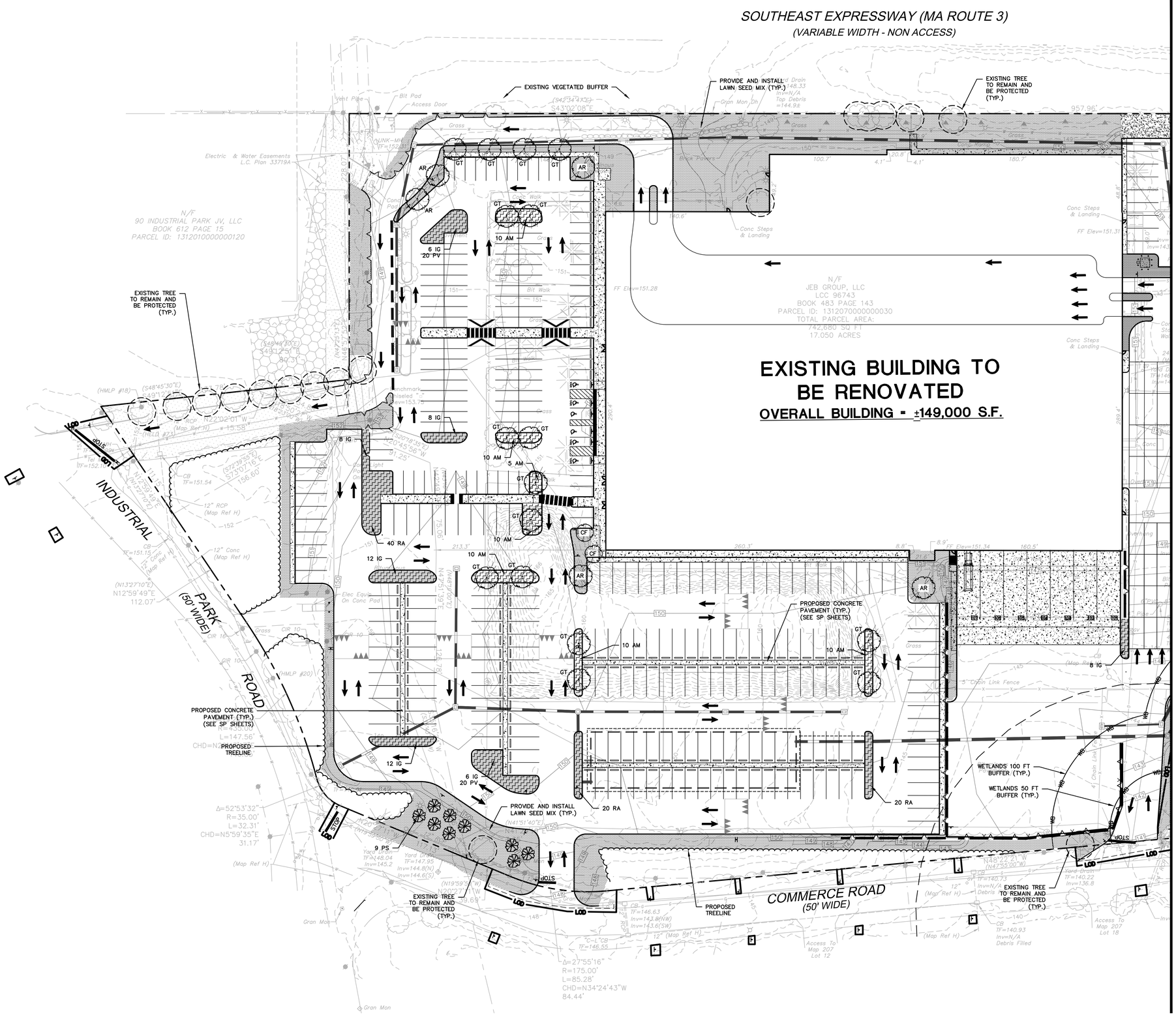

LANDSCAPE KEY

- PROVIDE AND INSTALL DECIDUOUS SHADE TREE
- PROVIDE AND INSTALL FLOWERING TREE
- PROVIDE AND INSTALL EVERGREEN TREE
- PROVIDE AND INSTALL LAWN SEED MIX
- PROVIDE AND INSTALL SHRUBS & GROUNDCOVER PLANTINGS
- PROVIDE AND INSTALL CONSERVATION SEED MIX
- PROVIDE AND INSTALL IMPERMEABLE LINER BELOW LANDSCAPE ISLAND
- DETENTION BASIN SIDE SLOPE PLANTING AREA
- BASIN BOTTOM PLANTING AREA
- SUPPLEMENTAL BUFFER PLANTINGS
- WB — 50' AND 100' WETLAND BUFFERS
- PROPOSED TREE LINE

SEE SHEET LL-0 FOR LANDSCAPE PLANT SCHEDULE

SEE SHEET LL-3 FOR LANDSCAPE DETAILS AND NOTES

SEE SHEET GN-1 FOR SITEWORK GENERAL NOTES

FOR PERMITTING PURPOSES ONLY
NOT RELEASED FOR CONSTRUCTION

Architecture
Engineering
Environmental
Land Surveying
BL Companies
355 Research Parkway
Meriden, CT 06450
(203) 630-1406
(203) 630-2615 Fax

PROPOSED DEVELOPMENT
100 INDUSTRIAL PARK ROAD
HINGHAM, MASSACHUSETTS

REVISIONS

No.	Date	Desc.
1.	05/12/2020	Revised per Staff and Commission Comments
2.	06/01/2020	Revised per Staff and Commission Comments
3.	07/13/2020	Revised per Planning and Peer Review Comments

Designed	W.E.V.
Drawn	W.E.V.
Reviewed	
Scale	1"=40'
Project No.	1901517
Date	03/06/2020
CAD File: LL190151701	

Title
LANDSCAPE PLAN

Sheet No.
LL-1

© 2020 BL COMPANIES, INC. THESE DRAWINGS SHALL NOT BE UTILIZED BY ANY PERSON, FIRM OR CORPORATION WITHOUT THE SPECIFIC WRITTEN PERMISSION OF BL COMPANIES.

TREE REMOVAL AND REPLACEMENT WITHIN 100 FOOT BUFFER ZONE					
EXISTING TREES TO BE REMOVED - 7 QTY (MAPLE TREES)					
PROPOSED TREE TO BE REPLANTED - 7 QTY					
KEY	QTY	BOTANICAL NAME	COMMON NAME	ROOT	SIZE
AR	7	Acer rubrum	Red Maple	B&B	2" CAL. MIN.

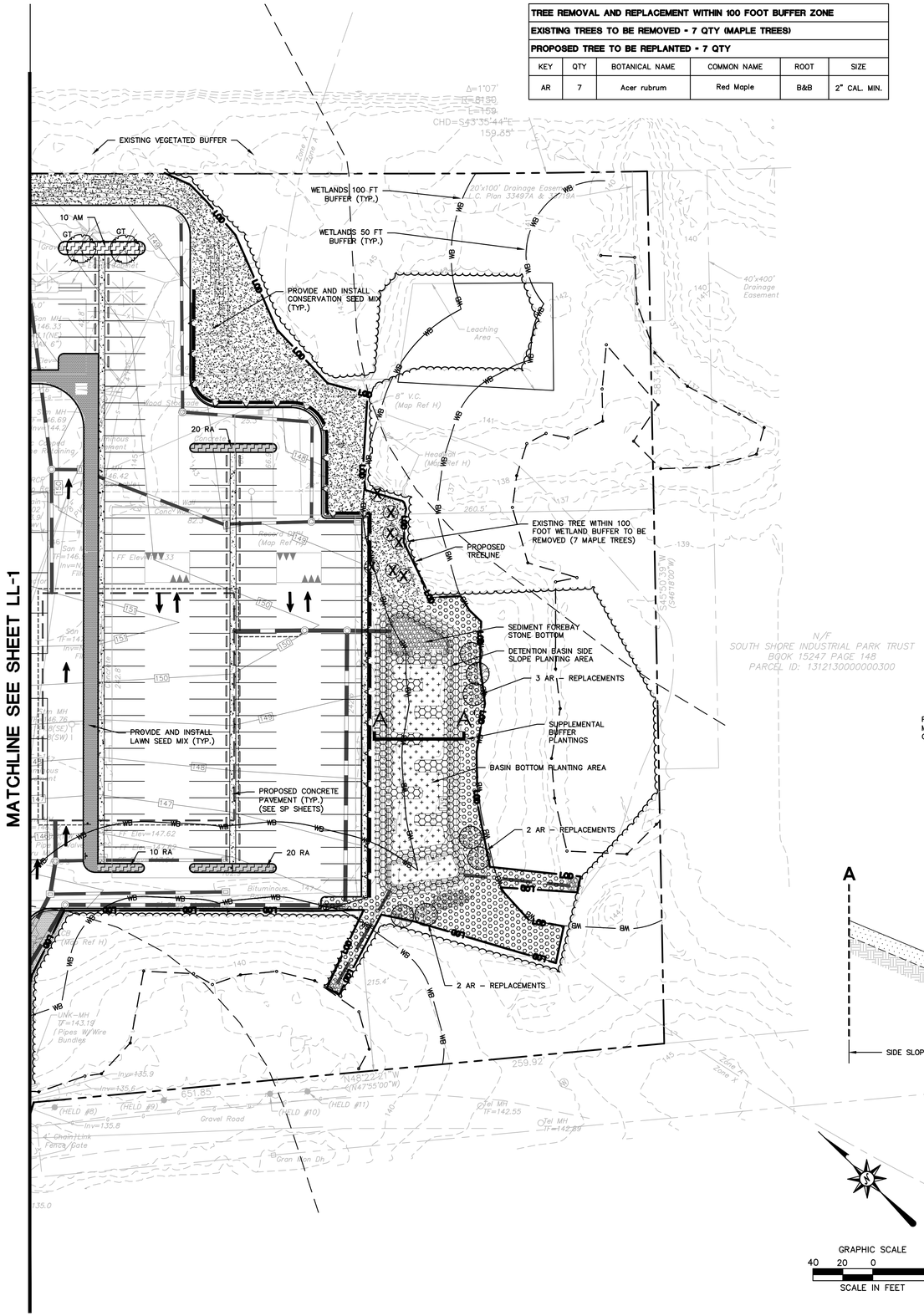

DETENTION BASIN PLANTING SCHEDULE				
BASIN BOTTOM PLANTING AREA (3,200 SF ±) (6"-12" WATER DEPTH)				
QTY	BOTANICAL NAME	COMMON NAME	SIZE	SPACING
300	Acorus calamus	Sweet Flag	2" PLUG	PLANT 12" O.C.
300	Carex stricta	Tussock Sedge	2" PLUG	PLANT 12" O.C.
300	Juncus effusus	Soft Rush	2" PLUG	PLANT 12" O.C.
300	Scirpus validus	Soft-Stem Bulrush	2" PLUG	PLANT 12" O.C.
100	Sparganium eurycarpum	Giant Burreed	2" PLUG	PLANT 36" O.C.
SIDE SLOPE PLANTING AREA (6,400 SF ±)				
60	Cephalanthus occidentalis	Buttonbush	18"-24"	PLANT 4' O.C.
60	Ilex verticillata	Winterberry	18"-24"	PLANT 4' O.C.
60	Viburnum dentatum	Arrowwood Viburnum (Upper Slope)	18"-24"	PLANT 4' O.C.
200	Panicum virgatum	Switchgrass (Upper Slope)	2" PLUG	PLANT 18" O.C.
200	Acorus calamus	Sweet Flag	2" PLUG	PLANT 12" O.C.
200	Carex stricta	Tussock Sedge	2" PLUG	PLANT 12" O.C.
200	Juncus effusus	Soft Rush	2" PLUG	PLANT 12" O.C.
SUPPLEMENTAL BUFFER PLANTINGS (7,000 SF ±)				
30	Myrica pensylvanica	Northern Bayberry	18"-24"	PLANT 5' O.C.
30	Rhus copallinum	Winged Sumac	18"-24"	PLANT 5' O.C.
40	Vaccinium angustifolium	Lowbush Blueberry	18"-24"	PLANT 4' O.C.
40	Comptonia peregrina	Sweetfern	18"-24"	PLANT 4' O.C.
10	Juniperus virginiana	Eastern Red Cedar	4'-5'	PLANT 10' O.C.

NOTES:
1) PLUG PLANTINGS TO BE DISTRIBUTED EVENLY THROUGHOUT PLANTING AREA.
2) SPECIES SHALL GROUPED TOGETHER IN MINIMUM QUANTITY OF 5.
3) REFER TO PLANTING DETAILS ON SHEET LL-3.
4) WET SEED MIX (HYDROSEED) TO BE INSTALLED AT THE BASIN BOTTOM PLANTING AREA FOR GROUNDCOVER ESTABLISHMENT. PLUG PLANTINGS TO BE INSTALLED AFTER HYDROSEEDING HAS BEEN COMPLETED.
5) WILDLIFE SEED MIX (HYDROSEED) TO BE INSTALLED AT SIDE SLOPE PLANTING AREA FOR GROUNDCOVER ESTABLISHMENT. SHRUB AND PLUG PLANTINGS TO BE INSTALLED AFTER HYDROSEEDING HAS BEEN COMPLETED.
5) WILDLIFE SEED MIX (HYDROSEED) TO BE INSTALLED WITHIN SUPPLEMENTAL BUFFER PLANTING AREA FOR GROUNDCOVER ESTABLISHMENT. SHRUB PLANTINGS TO BE INSTALLED AFTER HYDROSEEDING HAS BEEN COMPLETED.

LANDSCAPE KEY

- PROVIDE AND INSTALL DECIDUOUS SHADE TREE
- PROVIDE AND INSTALL FLOWERING TREE
- PROVIDE AND INSTALL EVERGREEN TREE
- PROVIDE AND INSTALL LAWN SEED MIX
- PROVIDE AND INSTALL SHRUBS & GROUNDCOVER PLANTINGS
- PROVIDE AND INSTALL CONSERVATION SEED MIX
- PROVIDE AND INSTALL IMPERMEABLE LINER BELOW LANDSCAPE ISLAND
- DETENTION BASIN SIDE SLOPE PLANTING AREA
- BASIN BOTTOM PLANTING AREA
- SUPPLEMENTAL BUFFER PLANTINGS
- WB — 50' AND 100' WETLAND BUFFERS
- PROPOSED TREE LINE

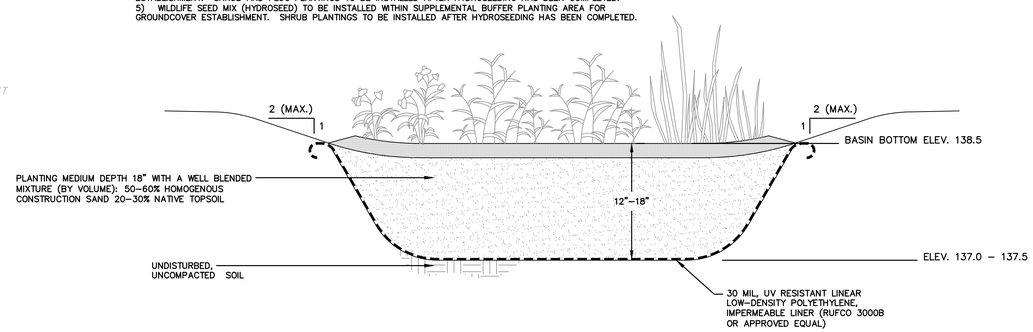

DETENTION BASIN WITH LINER

N.T.S.

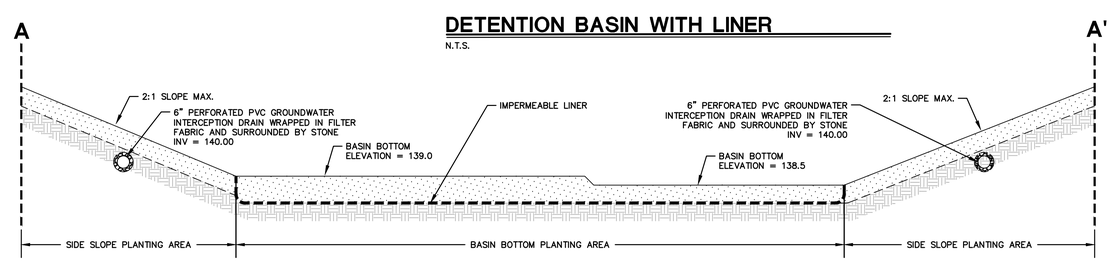

DETENTION BASIN - CROSS SECTION A-A'

N.T.S.

GRAPHIC SCALE
40 20 0 40
SCALE IN FEET

SEE SHEET LL-0 FOR LANDSCAPE PLANT SCHEDULE

SEE SHEET LL-3 FOR LANDSCAPE DETAILS AND NOTES

SEE SHEET GN-1 FOR SITEWORK GENERAL NOTES

FOR PERMITTING PURPOSES ONLY NOT RELEASED FOR CONSTRUCTION

Architecture Engineering Environmental Land Surveying
BL Companies
355 Research Parkway
Meriden, CT 06450
(203) 630-1406
(203) 630-2615 Fax

PROPOSED DEVELOPMENT
100 INDUSTRIAL PARK ROAD
HINGHAM, MASSACHUSETTS

REVISIONS

No.	Date	Desc.
1.	05/12/2020	Revised per Staff and Commission Comments
2.	06/01/2020	Revised per Staff and Commission Comments
3.	07/10/2020	Revised per Planning and Peer Review Comments

Designed	W.E.V.
Drawn	W.E.V.
Reviewed	
Scale	1"=40'
Project No.	1901517
Date	03/06/2020
CAD File: LL190151701	

Title

LANDSCAPE PLAN

Sheet No.

LL-2

Xref (s): : B2-190151701 : XY190151701 : XC190151701 : XC190151702 : XC190151703 : XL190151701 : XY190151701IBEES

Jul 13, 2020-8:11pm aklose G:\JOBS1\P\LA\190151\DWG\LL190151701.dwg
Layout: LL-2 Model: MODEL Plotted by LA in PDF-DWG-LLT190151701-DWG-LLT-24X36.pc3

© 2020 BL COMPANIES, INC. THESE DRAWINGS SHALL NOT BE UTILIZED BY ANY PERSON, FIRM OR CORPORATION WITHOUT THE SPECIFIC WRITTEN PERMISSION OF BL COMPANIES.

LANDSCAPE NOTES

1. THE LANDSCAPE PLAN AND DETAIL SHEET ARE FOR LANDSCAPING INFORMATION ONLY. REFER TO THE SITE PLAN, GRADING AND DRAINAGE PLAN, SITE UTILITIES PLAN, LIGHTING PLAN AND DEMOLITION PLAN FOR ALL OTHER INFORMATION.

2. COORDINATE PLANT MATERIAL LOCATIONS WITH SITE UTILITIES. UTILITY LOCATIONS SHOWN ON THE DRAWINGS ARE APPROXIMATE. EXERCISE CARE WHEN DIGGING IN AREAS OF POTENTIAL CONFLICT WITH UNDERGROUND OR OVERHEAD UTILITIES. THE CONTRACTOR IS RESPONSIBLE FOR ANY DAMAGE DUE TO CONTRACTOR'S NEGLIGENCE AND SHALL REPLACE OR REPAIR ANY DAMAGE AT CONTRACTOR'S EXPENSE.

3. THE LOCATIONS FOR PLANT MATERIAL ARE APPROXIMATE AND ARE SUBJECT TO FIELD ADJUSTMENT DUE TO UTILITY LOCATIONS AND SITE CONDITIONS. THE CONTRACTOR SHALL ACCURATELY STAKE OUT THE LOCATIONS FOR ALL PLANTS FOR THE REVIEW, ADJUSTMENT, AND APPROVAL BY OWNER OR LANDSCAPE ARCHITECT PRIOR TO PLANTING.

4. THE CONTRACTOR SHALL GUARANTEE THAT ALL PLANTS SHALL BE HEALTHY AND FREE OF DISEASE FOR A PERIOD OF ONE YEAR OR JUNE 1ST OF THE YEAR FOLLOWING INSTALLATION, WHICHEVER IS LONGER. AFTER SUBSTANTIAL COMPLETION AND ACCEPTANCE BY OWNER OR LANDSCAPE ARCHITECT. CONTRACTOR SHALL REPLACE ANY DEAD OR UNHEALTHY PLANTS AT CONTRACTOR'S EXPENSE. PLANT MATERIAL REPLACEMENTS SHALL BE GUARANTEED FOR ONE FULL YEAR FROM DATE OF REPLACEMENT. REPLACEMENT PLANTS SHALL BE THE SAME AS SPECIFIED FOR THE ORIGINAL PLANTING. REPLACEMENTS SHALL BE MADE AS MANY TIMES AS NECESSARY TO ENSURE HEALTHY PLANTS. FINAL ACCEPTANCE SHALL BE MADE IF ALL PLANTS MEET THE GUARANTEE REQUIREMENTS INCLUDING MAINTENANCE. MAINTENANCE RESPONSIBILITIES INCLUDE CULTIVATING, SPRAYING, WEEDING, WATERING, TIGHTENING GUYS, PRUNING, FERTILIZING, MULCHING, AND ANY OTHER OPERATIONS NECESSARY TO MAINTAIN PLANT VIABILITY. MAINTENANCE SHALL BEGIN IMMEDIATELY AFTER PLANTING AND CONTINUE UNTIL THE END OF THE GUARANTEE PERIOD. DURING THE LANDSCAPE MAINTENANCE PERIOD (GUARANTEE) THE LANDSCAPE CONTRACTOR SHALL NOTIFY THE OWNER IN WRITING OF ANY SITE CONSTRAINTS (PHYSICAL, ENVIRONMENT, ETC.) OR MAINTENANCE DEFICIENCIES THAT MAY AFFECT LANDSCAPE VEGETATION ESTABLISHMENT.

5. THE CONTRACTOR SHALL SUPPLY ALL LABOR, PLANTS, AND MATERIALS IN QUANTITIES SUFFICIENT TO COMPLETE THE WORK SHOWN ON THE DRAWINGS AND LISTED IN THE PLANT SCHEDULE. IN THE EVENT OF A DISCREPANCY BETWEEN QUANTITIES SHOWN IN THE PLANT SCHEDULE AND THOSE REQUIRED BY THE DRAWINGS, THE LARGER SHALL APPLY. ALL PLANTS SHALL BE ACCLIMATED BY THE SUPPLY NURSERY TO THE LOCAL HARDINESS ZONE AND BE CERTIFIED THAT THE PLANTING MATERIAL HAS BEEN GROWN FOR A MINIMUM OF TWO YEARS AT THE SOURCE AND OBTAINED WITHIN 200 MILES OF PROJECT SITE UNLESS OTHERWISE APPROVED BY OWNER OR LANDSCAPE ARCHITECT.

6. PLANTS SHALL HAVE TAGS THAT IDENTIFY PLANT GENUS, SPECIES, CULTIVAR (IF APPLICABLE), PLANT COMMON NAME, NAME OF SOURCE NURSERY, AND SIZE OF PLANT FOR REVIEW OF OWNER OR LANDSCAPE ARCHITECT.

7. NO PLANT SHALL BE PLACED IN THE GROUND BEFORE ROUGH GRADING HAS BEEN COMPLETED AND APPROVED BY THE OWNER OR LANDSCAPE ARCHITECT. STAKING THE LOCATION OF ALL TREES AND SHRUBS SHALL BE COMPLETED PRIOR TO PLANTING FOR APPROVAL BY THE OWNER OR LANDSCAPE ARCHITECT.

8. FINAL GRADES SHALL BLEND SMOOTHLY WITH EXISTING GRADES, AND TOP AND BOTTOM OF SLOPES SHALL BE ROUNDED.

9. ALL TREE AND SHRUB MASSINGS SHALL BE MULCHED TO A DEPTH OF 3". ANNUAL AND PERENNIAL BEDS SHALL BE MULCHED TO A DEPTH OF 2". MULCH SHALL BE UNCOLORED TRIPLE-SHREDDED HARDWOOD BARK MULCH, AGED AT LEAST 6 MONTHS.

10. IF TREE STAKING IS PROPOSED, TREE STAKING MUST BE COMPLETED THE SAME DAY AS THE TREE IS INSTALLED. ALL TREES SHALL BE STAKED OR GUYED PER DETAIL.

11. LANDSCAPE PLANTING AREAS MUST BE FREE DRAINING. PAVEMENT, COMPACTED SUBGRADE, DEAD OR DYING PLANT MATERIAL, BLASTED ROCK, STONES GREATER THAN 1" IN DIAMETER, AND ANY OTHER MATERIAL HARMFUL TO PLANT GROWTH AND DEVELOPMENT SHALL BE REMOVED FROM AREAS TO BE LANDSCAPED AS REQUIRED BY PLANTING DETAILS OR SPECIFICATIONS.

12. PLANTING SOIL:

DEPTH: PLANTING SOIL SHALL BE INSTALLED AT A MINIMUM DEPTH OF 4" OR AS NOTED IN THE LANDSCAPE DETAILS. PLANTING SOIL SHALL BE UTILIZED IN ALL PLANTING AREAS INCLUDING SEEDED AREAS.

TESTING: CONTRACTOR SHALL SUBMIT (2) SOIL SAMPLES PER SOIL STOCKPILE TO A CERTIFIED TESTING LABORATORY TO DETERMINE ACIDITY, ORGANIC CONTENT, MECHANICAL ANALYSIS, AVAILABLE NUTRIENTS (N,P,K,Ca,Mg,S,Fe,Mn,Zn,Cu,B,Al,Pb) AND NECESSARY AMENDMENTS TO SOIL. THE CONTRACTOR SHALL SUBMIT THE TEST RESULTS TO THE OWNER OR LANDSCAPE ARCHITECT FOR REVIEW AND APPROVAL. TEST RESULTS SHALL RECOMMEND AMENDMENTS THAT WILL ALTER THE SOIL CHARACTERISTICS SUCH THAT THE CHARACTERISTICS DESCRIBED BELOW ARE ACHIEVED AND THE SPECIFIED PLANTS (CONTRACTOR TO PROVIDE LIST TO TESTING LABORATORY) WILL ACHIEVE PROPER GROWTH THAT IS NEITHER DEFICIENT NOR EXCESSIVE. THE CONTRACTOR SHALL INCORPORATE THESE AMENDMENTS AT NO INCREASE IN CONTRACT PRICE.

CHARACTERISTICS: PLANTING SOIL MAY CONSIST OF EXISTING ON-SITE SOILS, AMENDED ON-SITE SOILS, OR IMPORTED SOILS MEETING THE FOLLOWING CRITERIA:

A. NOT TO CONTAIN MATERIALS HARMFUL TO PLANT LIFE, TO BE CLEAN, FERTILE, FRIABLE, AND WELL DRAINING. ALL PLANTING SOIL SHALL BE FREE OF ANY SUBSOIL EARTH CLODS, SODS, STONES OVER 1" IN ANY DIMENSION, STICKS, ROOTS, WEEDS, LITTER AND OTHER DELETERIOUS MATERIAL. PLANTING SOIL SHALL BE UNIFORM IN QUALITY AND TEXTURE.
B. PLANTING SOIL SHALL HAVE THE FOLLOWING OPTIMUM RANGES UNLESS OTHERWISE APPROVED BY THE OWNER OR LANDSCAPE ARCHITECT.

ORGANIC CONTENT 3% - 6% FOR LAWN OR GRASS AREAS.
4% - 8% FOR TREE AND SHRUB PLANTERS.
8%-16% FOR RETENTION OR DETENTION BASINS.
(BY LOSS OF IGNITION AT 375 C METHOD OF TESTING)

PH 6.0 - 7.3

C. NUTRIENT LEVELS SHALL BE ACHIEVED BY THE CONTRACTOR'S ADDITION OF AMENDMENTS TO THE PLANTING SOIL TO MEET THE OPTIMUM NUTRIENT LEVELS SPECIFIED IN THE TESTING LABORATORY REPORT FOR EACH OF PLANTS TO BE INSTALLED.
D. SOIL SHALL BE COMPACTED TO A SURFACE PENETRATION RESISTANCE OF 75-125 LBS/SQ.IN.
E. SOIL MAY BE TREATED FOR WEEDS WITH PRE-EMERGENT OR POST-EMERGENT HERBICIDE, AS NEEDED AND AS APPROPRIATE FOR THE APPLICATION SEASON OR LOCATION, OR ELIMINATE GROWTH OF UNWANTED PLANT MATERIAL. APPLY HERBICIDES IN ACCORDANCE WITH MANUFACTURERS RECOMMENDATIONS. HERBICIDE APPLICATOR MUST BE LICENSED IN THE COMMONWEALTH OF MASSACHUSETTS, AND PERFORM APPLICATIONS IN ACCORDANCE WITH LOCAL REQUIREMENTS, PERMITTING STIPULATIONS, AND ANY OTHER RESTRICTIONS INCLUDING AND IN EXCESS OF STATE AND FEDERAL REGULATIONS.
F. PROPOSED TOPSOIL SHALL MEET THE USDA SOILS TEXTURAL PERCENTAGES OF SAND, SILT, AND CLAY FOR FOLLOWING CLASSIFICATIONS:
   - LOAM
   - SANDY LOAM WHERE SAND DOES NOT EXCEED 70% AND CLAY IS NOT LESS THAN 5%.
   - SANDY CLAY LOAM WHERE SAND DOES NOT EXCEED 70% AND CLAY IS LESS THAN 28%.
G. BIORETENTION SOILS: SOIL TO BE INSTALLED IN RETENTION BASINS, PONDS, OR OTHER STORMWATER MANAGEMENT ENVIRONS SHALL MEET THE ABOVE DESCRIBED CHARACTERISTICS AND AS FOLLOWS:
   - SOIL SHALL NOT CONTAIN MORE THAN 20% CLAY AND LESS THAN 40% SILT.
   - SOIL SHALL HAVE AN INFILTRATION RATE BETWEEN 1/2" AND 3" PER HOUR.
H. MODIFICATION TO THE PLANTING SOIL CHARACTERISTICS DESCRIBED ABOVE MAY BE SUBMITTED FOR APPROVAL BY THE LANDSCAPE ARCHITECT. CONTRACTOR MUST DEMONSTRATE PROPOSED CHARACTERISTICS ARE EQUAL TO OR SUPERIOR TO THE SPECIFIED CHARACTERISTICS WITH RESPECT TO SUPPORTING PLANT GROWTH, AND STORMWATER MANAGEMENT.

12. PLANTING AMENDMENTS:
APPLY FERTILIZER AND OTHER AMENDMENTS AS RECOMMENDED FOR EACH PLANTING AREA BY SOIL ANALYSIS. APPLY AMENDMENTS IN A MANNER CONSISTENT WITH MANUFACTURER'S RECOMMENDATIONS. ANY ORGANIC AMENDMENTS SHALL HAVE A pH BETWEEN 4.5 AND 5.5 UNLESS OTHERWISE RECOMMENDED.

13. PLANT REQUIREMENTS: ALL PLANTS SHALL CONFORM IN SIZE AND GRADE TO THE AMERICAN STANDARD FOR NURSERY STOCK, ANSI Z60.1 (LATEST EDITION). ALL PLANTS SHALL MEET THE ADDITIONAL REQUIREMENTS SET FORTH BELOW AND IN WRITTEN SPECIFICATIONS AS APPLICABLE. ALL TREES AND SHRUBS SHALL HAVE BEEN GROWN AT A COMMERCIAL NURSERY WITHIN 200 MILES OF THE PROJECT SITE UNLESS OTHERWISE APPROVED BY OWNER OR LANDSCAPE ARCHITECT. THEY SHALL BE TYPICAL OF THEIR SPECIES OR VARIETY. THEY SHALL BE HEALTHY, SYMMETRICAL, EVENLY AND DENSELY BRANCHED, AND DENSELY FOLIATED WHEN IN LEAF. THEY SHALL BE FREE OF BARK INJURY, DISEASE, AND INSECT PESTS. ALL TREES SHALL HAVE A STRAIGHT TRUNK WITH A SINGLE MAIN LEADER UNLESS OTHERWISE CHARACTERISTIC OF THE SPECIES OR VARIETY. THE OWNER OR LANDSCAPE ARCHITECT WILL ALLOW SUBSTITUTIONS ONLY UPON WRITTEN APPROVAL. SIZES SHALL CONFORM TO THE MEASUREMENT SPECIFIED ON THE DRAWINGS. PLANTS LARGER THAN SPECIFIED MAY BE USED IF APPROVED, BUT THE USE OF SUCH PLANTS SHALL NOT INCREASE THE CONTRACT PRICE. ALL OVERSTORY TREES PLANTED ALONG PARKING AREAS, SIDEWALKS AND PEDESTRIAN ACCESSES SHALL NOT BRANCH BELOW 7' FEET IF THE TREE CALIPER IS 3" INCHES OR GREATER. ALL PLANT MATERIALS ARE SUBJECT TO INSPECTION AND ACCEPTANCE BY THE OWNER OR LANDSCAPE ARCHITECT AT THE NURSERY SOURCE. THE CONTRACTOR SHALL COORDINATE SOURCE VISITS WITH THE LANDSCAPE ARCHITECT AND SHALL ACCOMPANY THE OWNER AND/OR LANDSCAPE ARCHITECT FOR ALL INSPECTIONS. CERTIFICATES OF COMPLIANCE WITH SPECIFICATIONS ARE REQUIRED FOR ALL PLANTS.

14. INSPECTION AND REVIEW:
ALL PLANT MATERIAL SHALL BE SUBJECT TO INSPECTION AND ACCEPTANCE BY THE OWNER OR LANDSCAPE ARCHITECT AT THE NURSERY SOURCE OR PLACE OF GROWTH. THE CONTRACTOR SHALL COORDINATE WITH THE LANDSCAPE ARCHITECT ON A SCHEDULE FOR SOURCE VISITS AND ACCOMPANY THE OWNER OR LANDSCAPE ARCHITECT FOR ALL SOURCE INSPECTIONS. CERTIFICATES OF COMPLIANCE ARE REQUIRED FOR ALL PLANT MATERIALS.
PHOTOGRAPHIC REVIEW OF PLANT MATERIAL IS ACCEPTABLE IF APPROVED BY LANDSCAPE ARCHITECT. PHOTOGRAPHS MUST BE PROVIDED IN QUANTITY AND VARIETY TO ALLOW LANDSCAPE ARCHITECT SUFFICIENT INFORMATION TO MAKE A REASONABLE DETERMINATION AS TO THE PLANTS' QUALITY. OWNER AND LANDSCAPE ARCHITECT RESERVES THE RIGHT TO REJECT PLANT MATERIAL DELIVERED TO THE SITE BUT PREVIOUSLY ACCEPTED IF DAMAGED OR NOT PROPERLY MAINTAINED DURING THE DELIVERY PROCESS.

15. PLANTING SEASONS (UNLESS OTHERWISE APPROVED BY THE OWNER OR LANDSCAPE ARCHITECT)

	SPRING	FALL
EVERGREEN TREES AND SHRUBS	APRIL 1 TO JUNE 15	SEPTEMBER 1 TO OCTOBER 15
DECIDUOUS TREES AND SHRUBS	APRIL 1 TO JUNE 15	SEPTEMBER 15 TO NOVEMBER 15
SEED MIXES	PER MANUFACTURERS RECOMMENDATIONS OR AS LISTED IN SEED MIX NOTES	

16. SEEDING MIXTURES: REFER TO SEED MIX NOTES.

17. ALL SLOPES STEEPER THAN 3:1 RECEIVING A SEED MIX SHALL BE COVERED WITH AN EROSION CONTROL BLANKET OF STRAW FIBER AND BIODEGRADABLE OR PHOTODEGRADABLE NETTING.

18. UNLESS OTHERWISE NOTED IN DRAWING SET, NEW TREELINES SHALL EQUAL CLEARING AND GRUBBING LIMIT FOR CONSTRUCTION.

19. ALL DISTURBED AREAS NOT OTHERWISE DEVELOPED SHALL BE SEEDED WITH THE LAWN SEED MIX.

SEED MIX NOTES

A. LAWN SEEDING MIX:
15 % PERENNIAL RYEGRASS (BLEND OF 3 IMPROVED HYBRIDS)
25 % FINE LEAF OR CREEPING FESCUE (BLEND OF 3 IMPROVED HYBRIDS)
60 % KENTUCKY BLUEGRASS (BLEND OF 3 IMPROVED HYBRIDS)
SEEDING RATE: 5 LBS/1,000 S.F.
SEEDING DATES: AUGUST 15 - OCTOBER 1 AND APRIL 15 - JUNE 30 UNLESS OTHERWISE APPROVED BY THE OWNER OR LANDSCAPE ARCHITECT.

B. CONSERVATION SEED MIX -
NEW ENGLAND CONSERVATION/WILDLIFE MIX
NEW ENGLAND WETLAND PLANTS INC. OR APPROVED EQUAL

SPECIES: VIRGINIA WILD RYE (ELYMUS VIRGINICUS), LITTLE BLUESTEM (SCHIZACHYRIUM SCOPARIUM), BIG BLUESTEM (ANDROPOGON GERARDII), CREEPING RED FESCUE (FESTUCA RUBRA), SWITCH GRASS (PANICUM VIRGATUM), PARTRIDGE PEA (CHAMAECRISTA FASCICULATA), PANICLEDLEAD TICK TREFOIL (DESMODIUM PANICULATUM), INDIAN GRASS, (SORGHASTRUM NUTANS), BLUE VERVAIN (VERBENA HASTATA), BUTTERFLY MILKWEED (ASCLEPIAS TUBEROSA), BLACK EYE SUSAN (RUDBECKIA HIRTA), COMMON SNEEZEWEED (HELENIUM AUTUNALE), HEATH ASTER (ASTERPILOSUS/SYMPHYOTRICHUM PILOSUM), EARLY GOLDENROD (SOLIDAGO JUNCEA), UPLAND BENTGRASS (AGROSTIS PERENNANS).

APPLICATION RATE: 25 LBS/ ACRE (1 LB PER 1,750 SF)
SEEDING DATES: AUGUST 15 - OCTOBER 1 AND APRIL 15 - JUNE 30
UNLESS OTHERWISE APPROVED BY THE OWNER OR LANDSCAPE ARCHITECT.

C. WILDLIFE SEED MIX (STORMWATER DETENTION & SUPPLEMENTAL BUFFER AREAS)
DIVERSE PRAIRIE MIX PRODUCED BY PRAIRIE NURSERY OR APPROVED EQUAL
CONTAINS 25 WILDFLOWER SPECIES / 5 GRASS SPECIES
APPLICATION RATE: 10 LBS/ ACRE (1/4 LB PER 1,000 SF)
SEEDING DATES: AUGUST 15 - OCTOBER 1 AND APRIL 15 - JUNE 30
UNLESS OTHERWISE APPROVED BY THE OWNER OR LANDSCAPE ARCHITECT.

D. WET SEED MIX -
NEW ENGLAND WET MIX
NEW ENGLAND WETLAND PLANTS INC. OR APPROVED EQUAL

SPECIES: FOX SEDGE (CAREX VULPINOIDEA), LURID SEDGE (CAREX LURIDA), BLUNT BROOM SEDGE (CAREX SCOPARIA), BLUE VERVAIN (VERBENA HASTATA), FOWL BLUEGRASS (POA PALUSTRIS), HOP SEDGE (CAREX LUPULINA), GREEN BULRUSH (SCIRPUS ATROVIRENS), CREEPING SPIKE RUSH (ELEOCHARIS PALUSTRIS), FRINGED SEDGE (CAREX CRINITA), SOFT RUSH (JUNCUS EFFUSUS), SPOTTED JOE PYE WEED (EUPATORIUM MACULATUM), RATTLESNAKE GRASS (GLYCERIA CANADENSIS), SWAMP ASTER (ASTER PUNICEUS), BLUEFLAG (IRIS VERSICOLOR), SWAMP MILKWEED (ASCLEPIAS INCARNATA), SQUARE STEMMED MONKEY FLOWER (MIMULUS RINGENS).

APPLICATION RATE: 18 LBS/ ACRE (1 LB PER 2,500 SF)
SEEDING DATES: AUGUST 15 - OCTOBER 1 AND APRIL 15 - JUNE 30
UNLESS OTHERWISE APPROVED BY THE OWNER OR LANDSCAPE ARCHITECT.

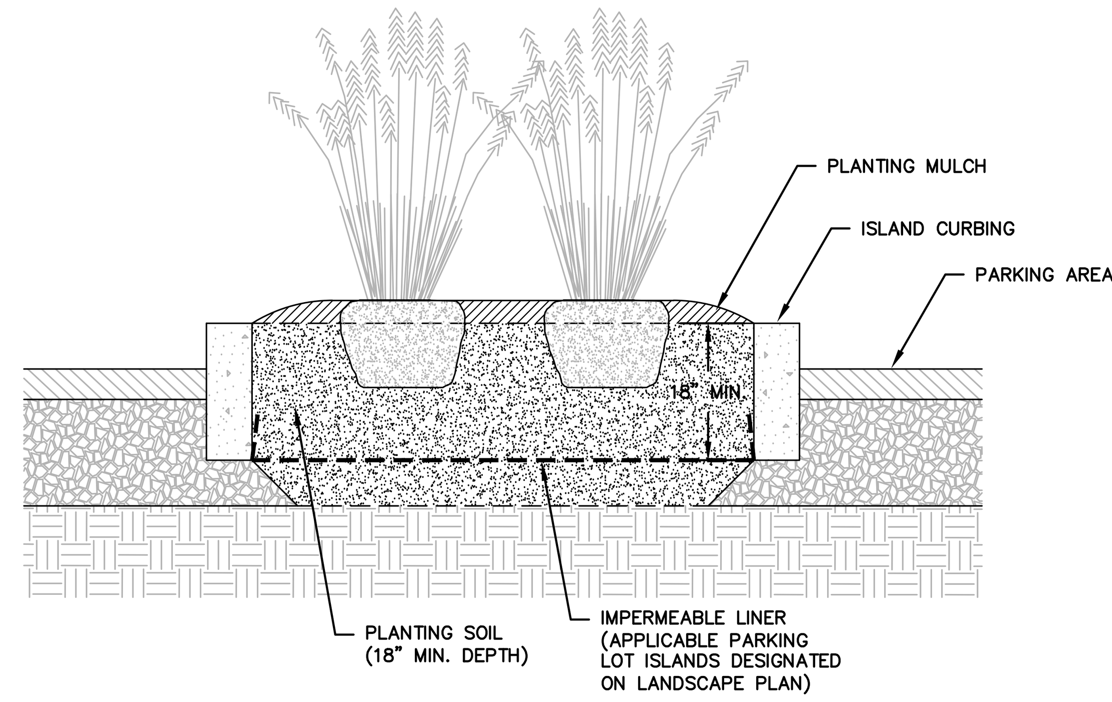

PARKING LOT ISLAND WITH LINER

N.T.S

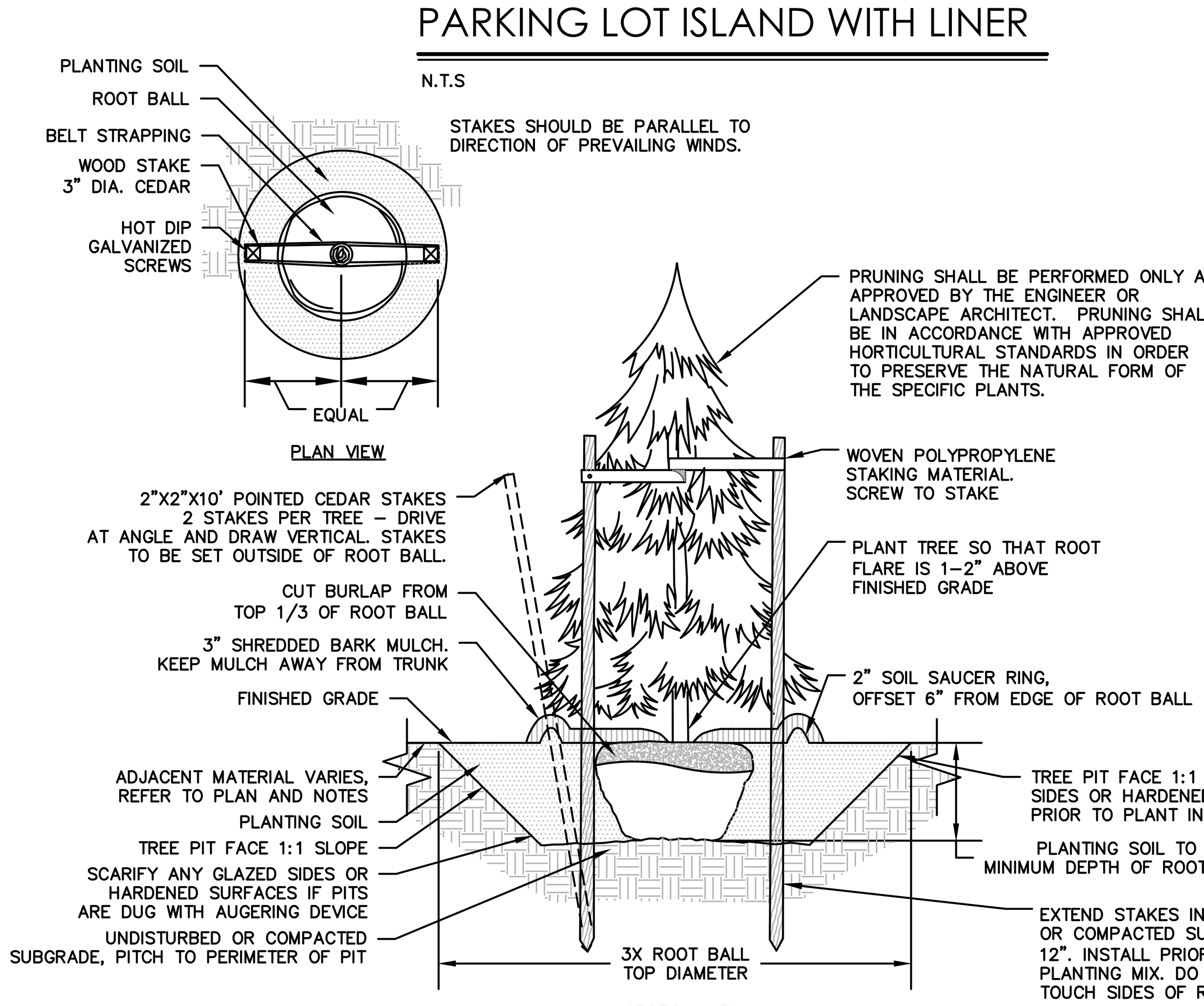

NOTES:
1. STAKING FOR TREES ON 4:1 SLOPES OR LESS TO BE PERFORMED AT CONTRACTOR'S DISCRETION.
2. WOVEN POLYPROPYLENE STAKING MATERIAL SHALL BE DEEPROOT ARBORTIE (GREEN) OR APPROVED EQUIVALENT. MATERIAL SHALL BE LOOPED AROUND TREE THROUGH EACH OTHER, TWISTED, AND SECURED TO THE STAKE. INSTALL SPECIFIED MATERIAL IN ACCORDANCE WITH MANUFACTURER'S DIRECTIONS.
3. BEFORE IN HOLE, REMOVE BOTTOM OF CAGE. ONCE IN HOLE, REMOVE REST OF CAGE FROM ROOT BALL. REMOVE TWINE AND BURLAP FROM TOP 1/3 OF ROOT BALL - SCORE REMAINING 2/3 OF BURLAP. IF BURLAP IS SYNTHETIC OR HAS BEEN TREATED WITH ANTI-DESSICENT, COMPLETELY REMOVE IT FROM ROOT BALL.

EVERGREEN TREE PLANTING

N.T.S

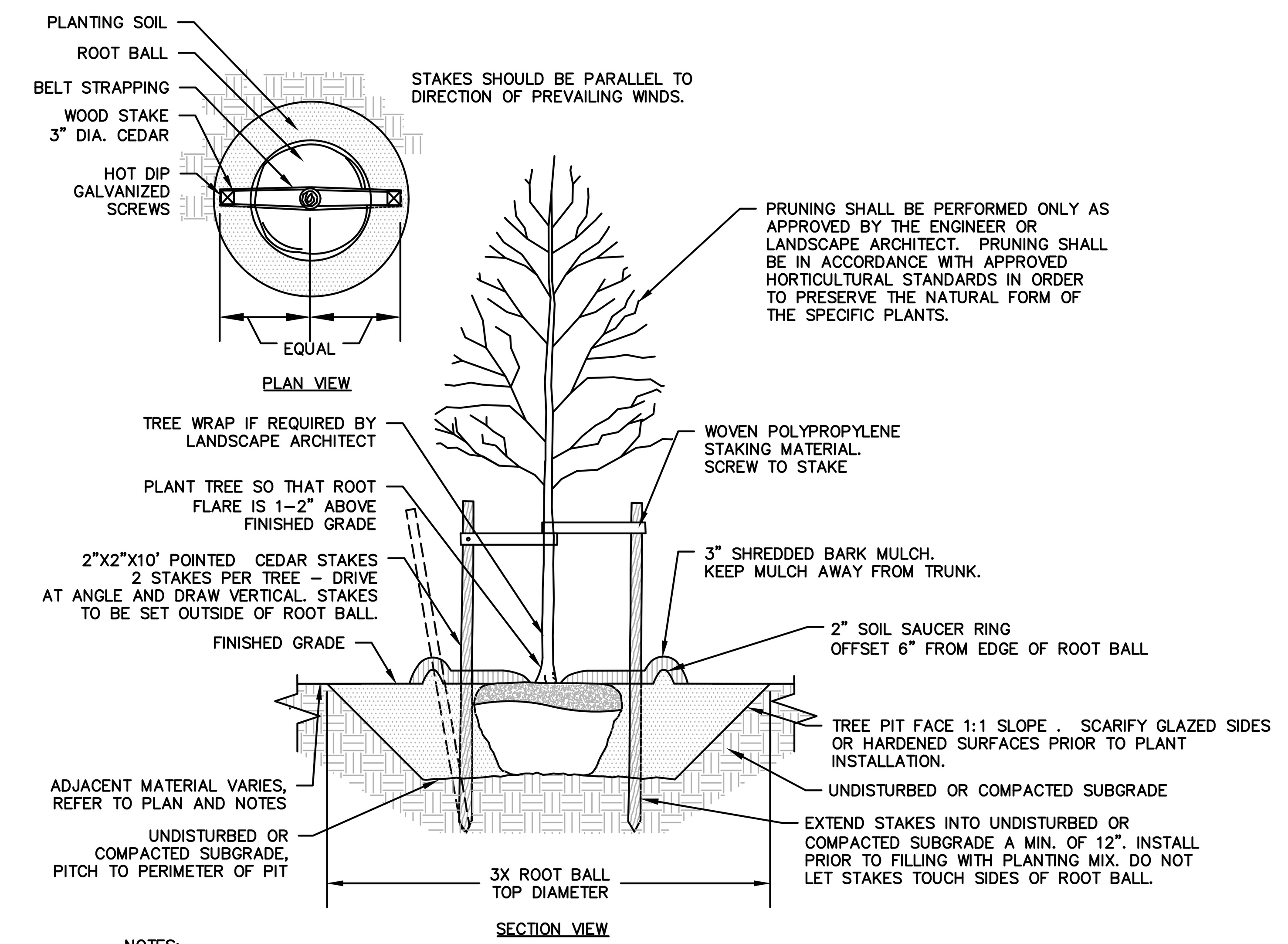

NOTES:
1. STAKING FOR TREES ON 4:1 SLOPES OR LESS THAN 3" CALIPER TO BE PERFORMED AT CONTRACTORS DISCRETION.
2. WOVEN POLYPROPYLENE STAKING MATERIAL SHALL BE DEEPROOT ARBORTIE (GREEN) OR APPROVED EQUIVALENT. MATERIAL SHALL BE LOOPED AROUND TREE THROUGH EACH OTHER, TWISTED, AND SECURED TO THE STAKE. INSTALL SPECIFIED MATERIAL IN ACCORDANCE WITH MANUFACTURER'S DIRECTIONS.
3. BEFORE IN HOLE, REMOVE BOTTOM OF CAGE. ONCE IN HOLE, REMOVE REST OF CAGE FROM ROOT BALL. REMOVE TWINE AND BURLAP FROM TOP 1/3 OF ROOT BALL - SCORE REMAINING 2/3 OF BURLAP. IF BURLAP IS SYNTHETIC OR HAS BEEN TREATED WITH ANTI-DESSICANT, COMPLETELY REMOVE IT FROM ROOT BALL.

DECIDUOUS TREE PLANTING

N.T.S

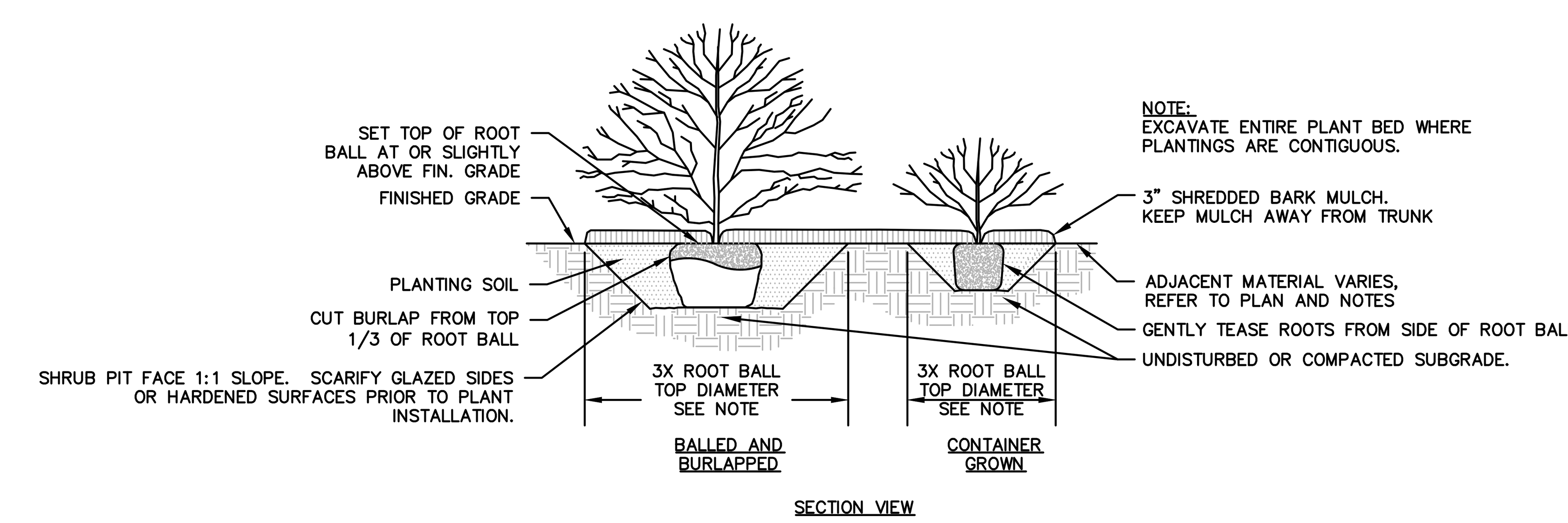

SHRUB PLANTING

N.T.S

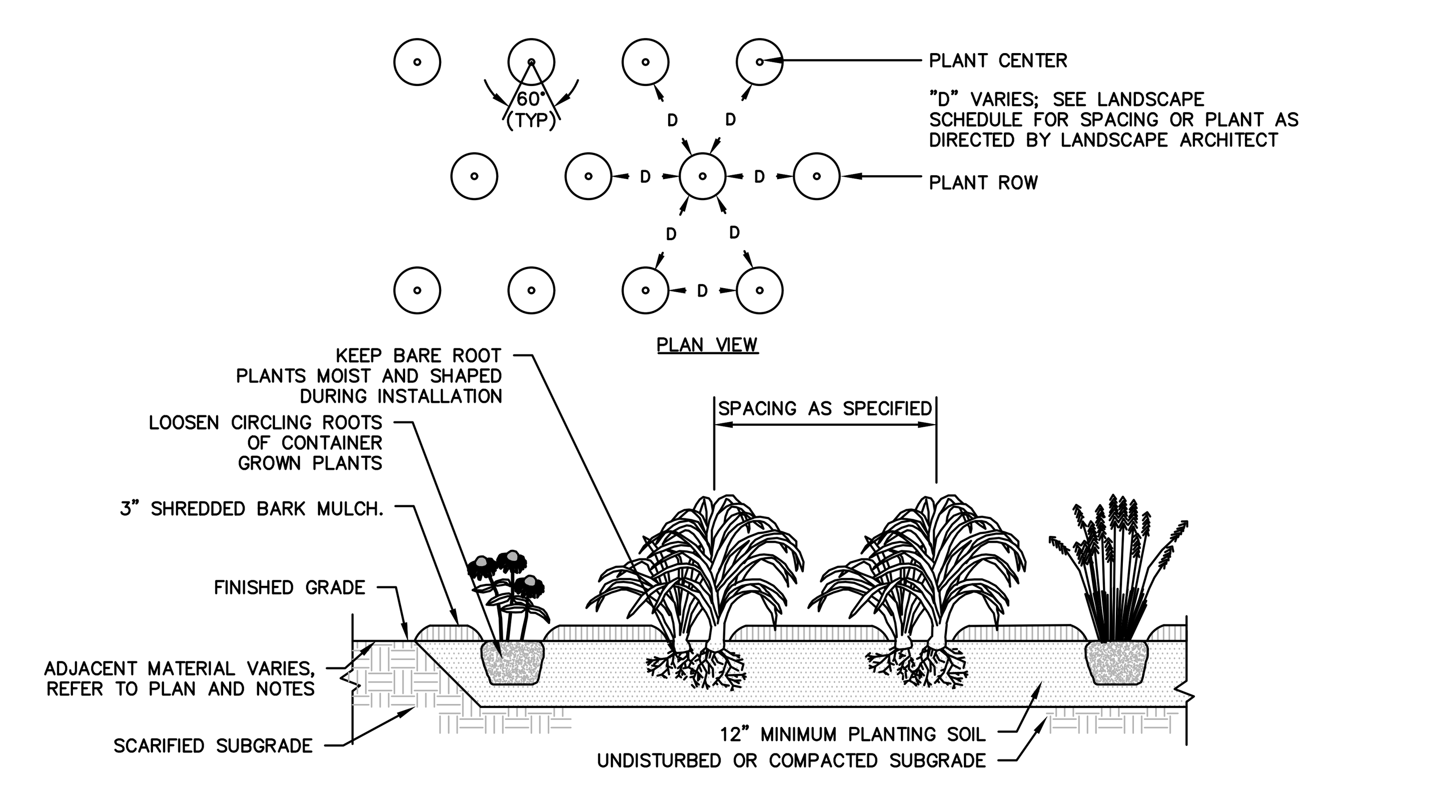

GROUNDCOVER / PLUG PLANTING

N.T.S

FOR PERMITTING PURPOSES ONLY
NOT RELEASED FOR CONSTRUCTION

Architecture
Engineering
Environmental
Land Surveying

BL Companies

355 Research Parkway
Meriden, CT 06450
(203) 630-1406
(203) 630-2615 Fax

PROPOSED DEVELOPMENT
100 INDUSTRIAL PARK ROAD
HINGHAM, MASSACHUSETTS

REVISIONS

No.	Date	Desc.
1.	05/12/2020	Revised per Staff and Commission Comments
3.	07/13/2020	Revised per Planning and Peer Review Comments

Designed	W.E.V.
Drawn	W.E.V.
Reviewed	
Scale	NTS
Project No.	1901517
Date	03/06/2020
CAD File:	LL190151701

Title
LANDSCAPE DETAILS & NOTES

Sheet No.
LL-3

Xref (s): ; BD190151701 ; XY190151701 ; XC190151701 ; XC190151702 ; XC190151703 ; XL190151701 ; XY190151701TREES
Jul 13, 2020 8:11pm aklose G:\JOBS19\14\1901517\DWG\LL190151701.dwg
Layout: LL-3 24x36. G:\JOBS19\14\1901517\DWG\LL190151701.DWG.LL-3 24X36.

© 2020 BL COMPANIES, INC. THESE DRAWINGS SHALL NOT BE UTILIZED BY ANY PERSON, FIRM OR CORPORATION WITHOUT THE SPECIFIC WRITTEN PERMISSION OF BL COMPANIES.

LEGEND

- EXISTING TREES (AS OF JUNE 2020)
- EXISTING TREES REMOVED (JUNE 2020)
- EXISTING TREE REMOVED (JUNE 2020)
- PROPOSED LIMIT OF CLEARING

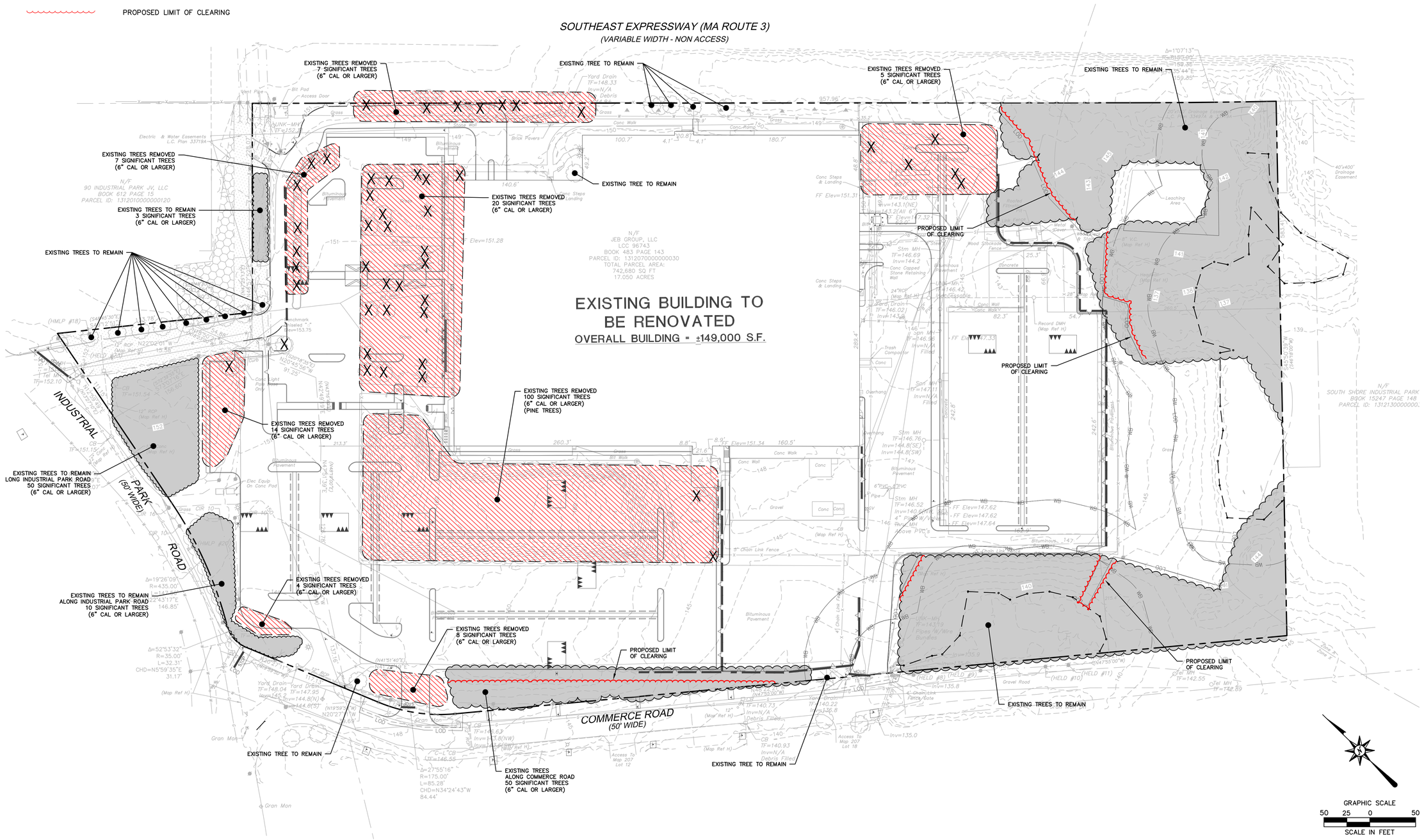

FOR PERMITTING PURPOSES ONLY
NOT RELEASED FOR CONSTRUCTION

Architecture Engineering Environmental Land Surveying
BL Companies
355 Research Parkway
Meriden, CT 06450
(203) 630-1406
(203) 630-2615 Fax

PROPOSED DEVELOPMENT
100 INDUSTRIAL PARK ROAD
HINGHAM, MASSACHUSETTS

REVISIONS

No.	Date	Desc.
1.	05/12/2020	Revised per Staff and Commission Comments
2.	06/01/2020	Revised per Staff and Commission Comments
3.	07/13/2020	Revised per Planning and Peer Review Comments

Designed	W.E.V.
Drawn	W.E.V.
Reviewed	
Scale	1"=50'
Project No.	1901517
Date	03/06/2020
CAD File: LL190151701	

Title
EXISTING TREE PLAN

Sheet No.
LL-4

Xref (s): BD190151701 ; XY190151701 ; XC190151701 ; XC190151702 ; XC190151703 ; XL190151701 ; XY190151701TREES

Jul 13, 2020-8:11pm cstose G:\JOBS\PY141\901517\DWG\LL190151701.dwg
Layout: LL-4 Model: G:\2001\141\901517\DWG\2019\01517-2-4.dwg

© 2020 BL COMPANIES, INC. THESE DRAWINGS SHALL NOT BE UTILIZED BY ANY PERSON, FIRM OR CORPORATION WITHOUT THE SPECIFIC WRITTEN PERMISSION OF BL COMPANIES.

LIGHTING NOTES

1. ALL WORK SHALL BE DONE IN STRICT ACCORDANCE WITH ALL REQUIREMENTS OF ANY LOCAL APPLICABLE CODES OR ORDINANCES, PUBLIC UTILITY COMPANY REGULATIONS, STATE CODE, AND NATIONAL ELECTRICAL CODE WITH INTERIM AMENDMENTS THERETO.

2. ALL MATERIALS SHALL CONFORM TO THE LATEST ISSUE OF ALL APPLICABLE STANDARDS AS ESTABLISHED BY EEI, NEMA, ASTM, IPCEA, NATIONAL BOARD OF FIRE UNDERWRITERS, AND UNDERWRITERS LABORATORIES, INC.

3. THE CONTRACTOR SHALL TEST THE LIGHTING AFTER INSTALLATION WITH THE DEVELOPER/OWNER, AND PROVIDE TO DEVELOPER/OWNER WARRANTY AND MAINTENANCE INFORMAITON. THE CONTRACTOR SHALL MAKE ADJUSTMENTS AND/OR MODIFICATIONS AS REQUIRED BY THE DEVELOPER/OWNER TO OBTAIN EVEN LIGHT DISTRIBUTION.

4. CONTRACTOR SHALL LEAVE ENTIRE ELECTRICAL SYSTEM INSTALLED BY THE CONTRACTOR IN PROPER WORKING CONDITION AND REPLACE WITHOUT ADDITIONAL CHARGE ALL WORK OR MATERIALS WHICH MAY DEVELOP DEFECTS WITHIN A PERIOD OF ONE (1) YEAR FROM DATE OF FINAL ACCEPTANCE BY THE OWNER.

5. THE CONTRACTOR SHALL SUBMIT SHOP DRAWINGS OF ALL PRODUCTS, BASES AND CONDUITS TO SITE ENGINEER FOR REVIEW AND APPROVAL PRIOR TO DELIVERY OF MATERIAL TO SITE. ALLOW A MINIMUM OF 14 WORKING DAYS FOR REVIEW. IF ALTERNATIVE LIGHTING IS PROPOSED SUBMIT A PHOTOMETRIC FOOT-CANDLE LAYOUT ALONG WITH ANNUAL MAINTENANCE REQUIREMENTS AND ANTICIPATED COSTS.

6. LIGHTS ARE DESIGNED TO PROVIDE EVEN LEVELS OF ILLUMINATION AND AVOID GLARE ONTO NEIGHBORING PROPERTIES. FINAL DESIGN MAY VARY PENDING MANUFACTURER'S RECOMMENDATIONS.

7. ALL LIGHTING CONTROLS, PANELS, CIRCUIT BREAKERS ETC. ARE TO BE PROVIDED UNDER A SEPARATE CONTRACT BY BUILDING CONTRACTOR. CAREFUL COORDINATION IS REQUIRED BETWEEN SITE CONTRACTOR AND BUILDING CONTRACTOR TO PROVIDE A COMPLETE INSTALLATION FOR SITE LIGHTING.

8. THE CONTRACTOR WILL PROVIDE AND INSTALL ALL MATERIAL NECESSARY TO COMPLETE THE SITE LIGHTING SYSTEM INCLUDING BUT NOT LIMITED TO CONDUIT, BASES, ANCHOR BOLTS, POLES, SITE LIGHTS AND LAMPS. THE CONTRACTOR WILL COORDINATE WIRING AND POWERING OF LIGHTS WITH OWNER, ARCHITECT, AND BUILDING CONTRACTOR IF DIFFERENT FROM THE SITE CONTRACTOR.

9. ALL LIGHTS TO BE AS LISTED IN SCHEDULE OR APPROVED EQUIVALENT. LIGHTS SHALL BE MOUNTED ON ROUND STRAIGHT STEEL POLES ATOP 3' HIGH CONCRETE BASES THAT ARE SET 3' (CLEAR) BEHIND CURBS UNLESS OTHERWISE INDICATED ON CONTRACT DRAWINGS. ILLUMINATION ANALYSIS MODELED USING LIGHTING FIXTURES LISTED IN SCHEDULE.

10. LIGHT POLES AND BRACKETS TO BE AS SHOWN ON DETAILS OR APPROVED EQUIVALENT.

11. WIRE AND CABLE SHALL BE COPPER AND CONFORM TO THE FOLLOWING NEC TYPE THHN/THWN SOLID FOR NO. 12 AND NO. 10. NEC TYPE THHN/THWN STRANDED FOR NO. 8 AND LARGER. RIGID STEEL CONDUIT SHALL BE GALVANIZED. FITTINGS SHALL BE CAST FERROUS MATERIAL WITH A CADMIUM OR ZINC PLATED FINISH.

12. ALL EQUIPMENT SHALL BE GROUNDED AND BONDED IN ACCORDANCE TO NEC.

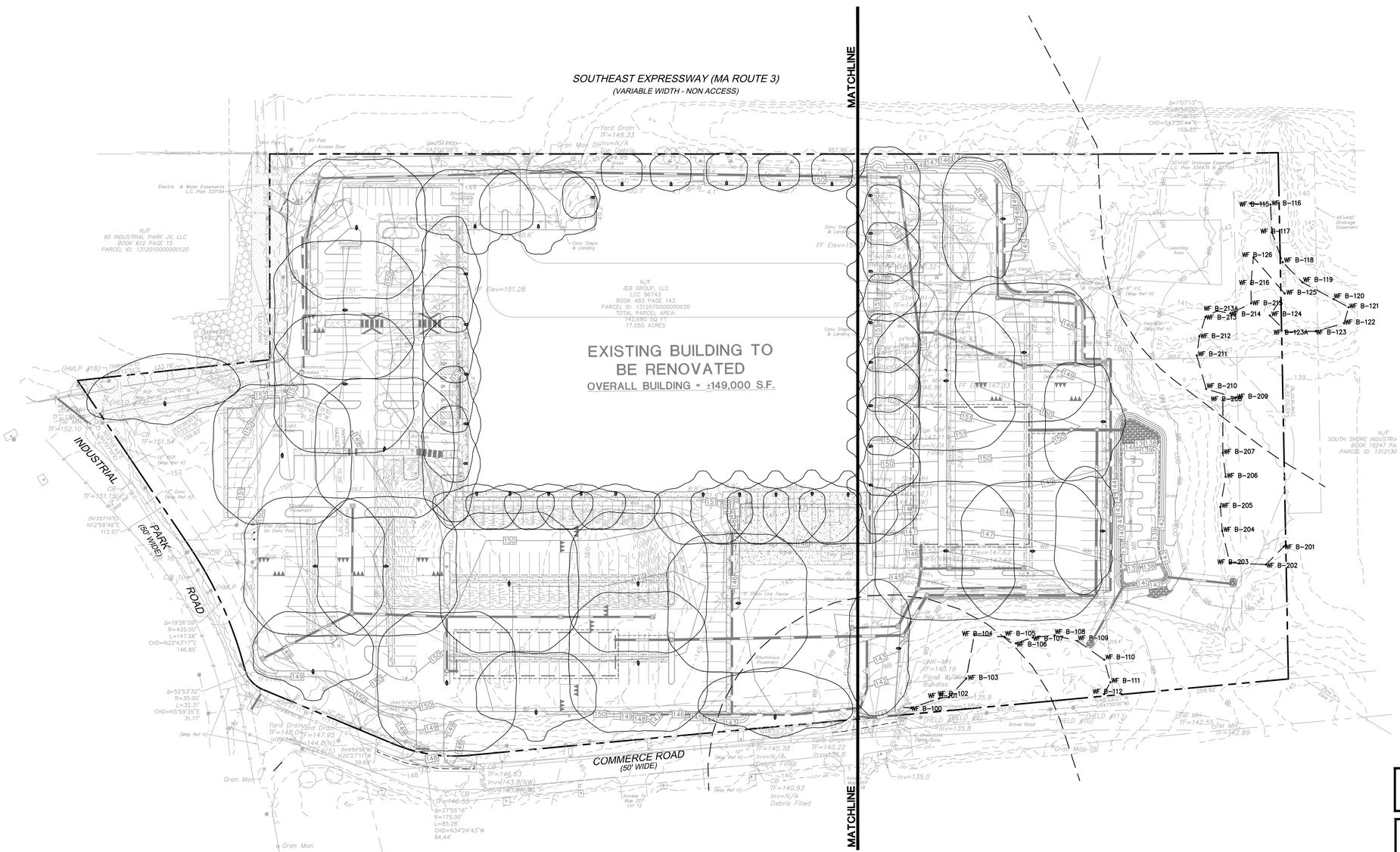

SEE SHEET LP-1 FOR LIGHTING DETAILS

SEE SHEET LP-2 FOR LUMINAIRE SCHEDULE

FOR PERMITTING PURPOSES ONLY NOT RELEASED FOR CONSTRUCTION

Architecture
Engineering
Environmental
Land Surveying

BL Companies

355 Research Parkway
Meriden, CT 06450
(203) 630-1406
(203) 630-2615 Fax

COMMONWEALTH OF MASSACHUSETTS
ROBERT M. POLES
CIVIL
No. 54612
REGISTERED PROFESSIONAL ENGINEER

PROPOSED DEVELOPMENT

100 INDUSTRIAL PARK ROAD
HINGHAM, MASSACHUSETTS

REVISIONS

No.	Date	Desc.
1.	05/12/2020	Revised per Staff and Commission Comments
2.	06/01/2020	Revised per Staff and Commission Comments

Designed	L.M.W.
Drawn	L.M.W.
Reviewed	R.Z.
Scale	1"=60'
Project No.	1901517
Date	03/06/2020
CAD File: LP190151701	

Title

OVERALL LIGHTING PLAN

Sheet No.

LP-0

Jul 13, 2020-8:12am cabbace G:\JOBS\PLI\A\190151\7\DWG\LP190151701.dwg
LAYOUT: PLAN 24X36 ARCH D
Xref (s): BD190151701; XV190151701; XA190151701; XC190151702; XC190151703; XE190151701

© 2020 BL COMPANIES, INC. THESE DRAWINGS SHALL NOT BE UTILIZED BY ANY PERSON, FIRM OR CORPORATION WITHOUT THE SPECIFIC WRITTEN PERMISSION OF BL COMPANIES.

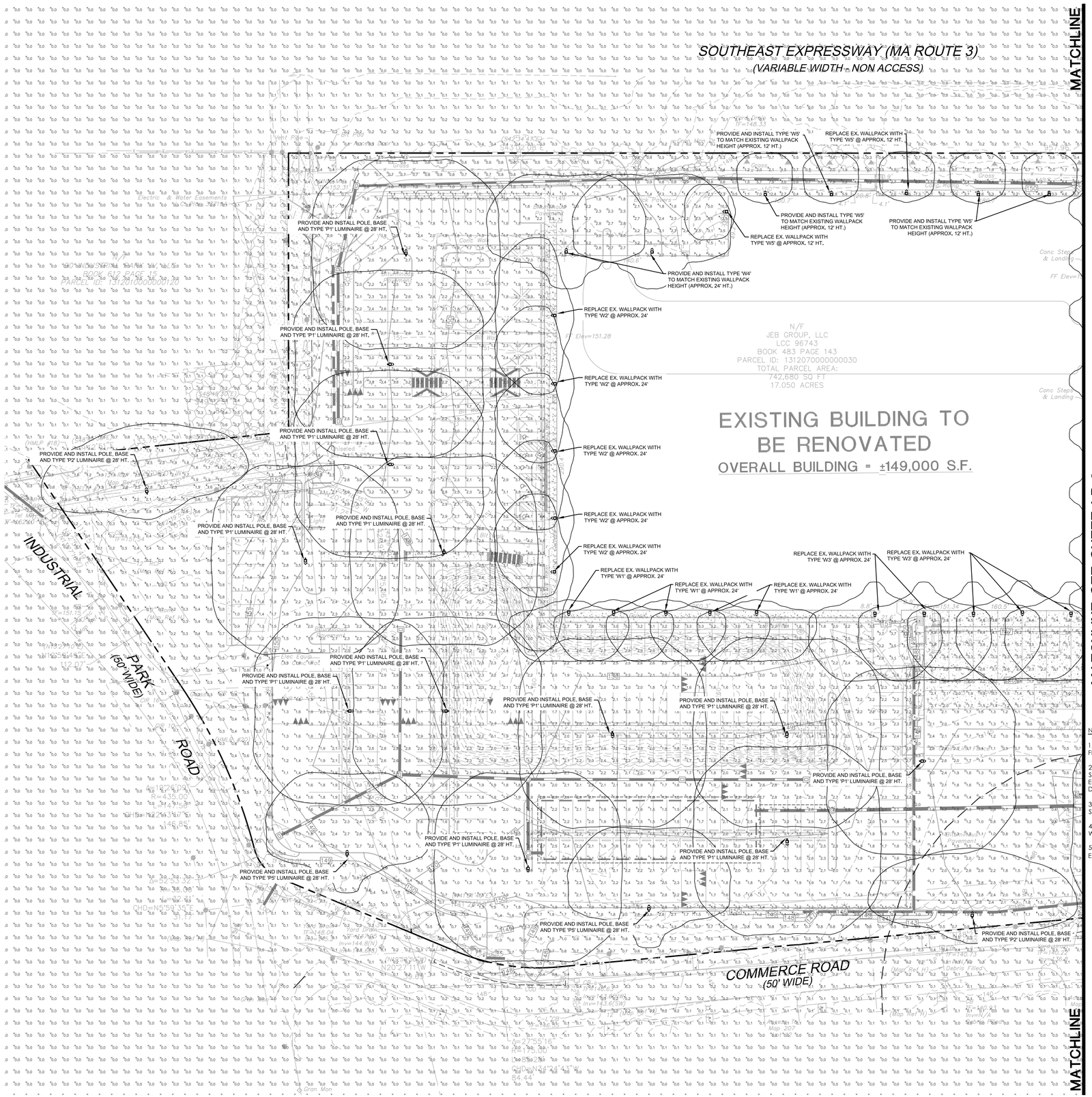

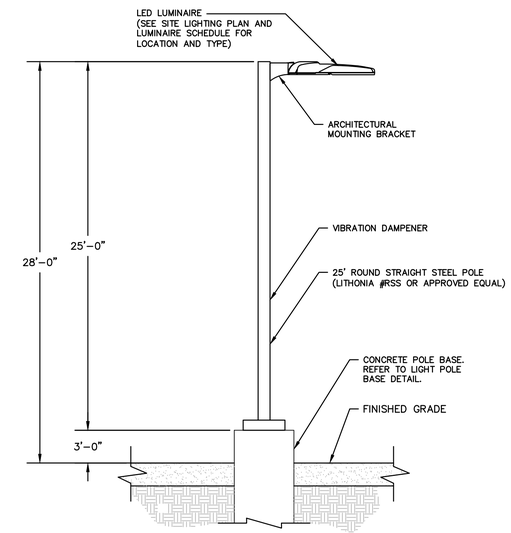

TYPICAL LUMINAIRE MOUNTING DETAIL

N.T.S

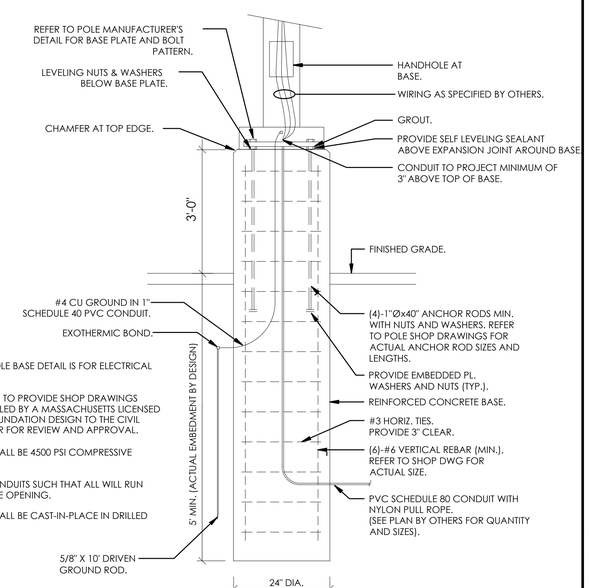

TYPICAL CONCRETE LIGHT POLE BASE DETAIL

N.T.S

NOTES:

1. CONCRETE POLE BASE DETAIL IS FOR ELECTRICAL FEATURES ONLY.
2. CONTRACTOR TO PROVIDE SHOP DRAWINGS SIGNED AND SEALED BY A MASSACHUSETTS LICENSED ENGINEER OF FOUNDATION DESIGN TO THE CIVIL DESIGN ENGINEER FOR REVIEW AND APPROVAL.
3. CONCRETE SHALL BE 4500 PSI COMPRESSIVE STRENGTH.
4. ARRANGE CONDUITS SUCH THAT ALL WILL RUN WITHIN POLE BASE OPENING.
5. CONCRETE SHALL BE CAST-IN-PLACE IN DRILLED EXCAVATION.

GRAPHIC SCALE
40 20 0 40
SCALE IN FEET

SEE SHEET LP-0 FOR LIGHTING NOTES

SEE SHEET LP-2 FOR LUMINAIRE SCHEDULE

FOR PERMITTING PURPOSES ONLY NOT RELEASED FOR CONSTRUCTION

Architecture
Engineering
Environmental
Land Surveying

BL Companies

355 Research Parkway
Meriden, CT 06450
(203) 630-1406
(203) 630-2615 Fax

COMMONWEALTH OF MASSACHUSETTS
ROBERT M. ROLER
CIVIL
No. 54612
REGISTERED PROFESSIONAL ENGINEER

PROPOSED DEVELOPMENT

100 INDUSTRIAL PARK ROAD
HINGHAM, MASSACHUSETTS

REVISIONS

No.	Date	Desc.
1.	05/12/2020	Revised per Staff and Commission Comments
2.	06/01/2020	Revised per Staff and Commission Comments

Designed	L.M.W.
Drawn	L.M.W.
Reviewed	R.Z.
Scale	1"=40'
Project No.	1901517
Date	03/06/2020
CAD File:	LP190151701

Title

LIGHTING PLAN

Sheet No.

LP-1

Xref (s) : BD190151701 ; XY190151701 ; XC190151701 ; XL190151701 ; XP190151701 ; XU190151701 ; XE190151701

Jul 13, 2020-8:12pm aldose G:\JOBS1\PLA\190151701\DWG\LP190151701.dwg
Layout(s): LP-1 Model: Defpoints Xref(s): PLA\190151701\DWG\LP190151701DWG\LP-2-Site.dwg

© 2020 BL COMPANIES, INC. THESE DRAWINGS SHALL NOT BE UTILIZED BY ANY PERSON, FIRM OR CORPORATION WITHOUT THE SPECIFIC WRITTEN PERMISSION OF BL COMPANIES.

MATCHLINE SEE SHEET LP-1

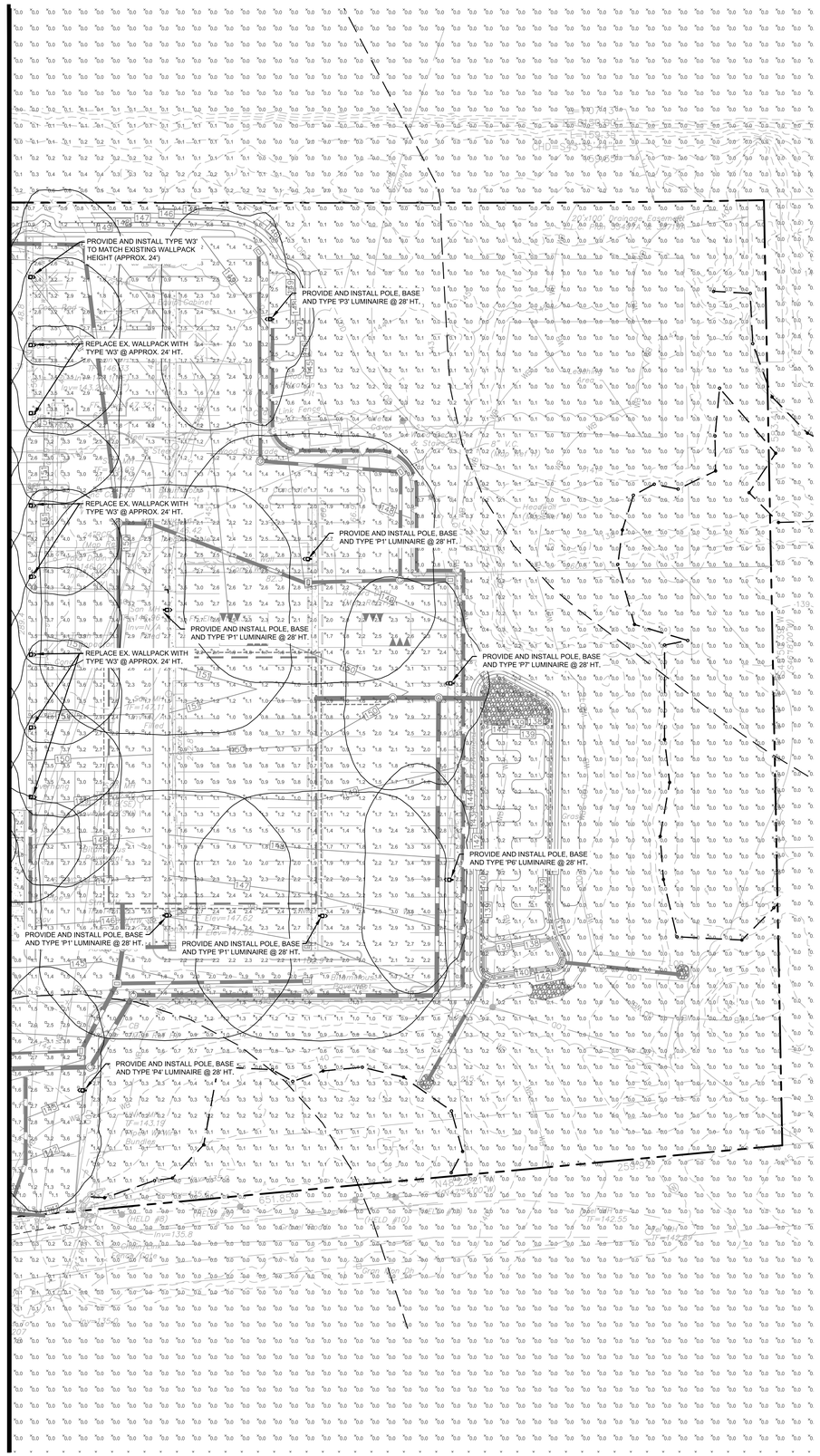

Lumark

DESCRIPTION

The patented Lumark Crossfour™ MAXX LED wall pack series of luminaires provides low profile architectural style with super bright, energy-efficient LEDs. The rugged die-cast aluminum construction, back box with secure lock hinges, stainless steel hardware along with a sealed and gasketed optical compartment make Crossfour impervious to contaminants. The Crossfour MAXX wall luminaire is ideal for wall/surface, inverted mount for facade/canopy illumination, perimeter and site lighting. Typical applications include pedestrian walkways, building entrances, multi-use facilities, industrial facilities, perimeter parking areas, storage facilities, institutions, schools and loading docks.

SPECIFICATION FEATURES

Construction
Low profile LED design with rugged one-piece, die-cast aluminum back box and hinged removable door. Matching housing styles incorporate both a full cutoff and refractive lens design. Full cutoff and refractive lens models incorporate IP65 and IK08 / IK09. Patent pending secure lock hinge feature allows for safe and easy tool-less electrical connections with the supplied push-in connectors. Back box includes four 1/2" NPT threaded conduit entries. The door and box is secured by four tag bolts (supplied by others). External fin design extracts heat from the fixture surface. One-piece silicone gasket seals door and back box. Not recommended for car wash applications.

Optical
Silicone sealed optical LED chamber incorporates a custom engineered reflector providing high-efficiency illumination. Full cutoff models integrate an impact-resistant molded refractive prism lens to meet most lighting requirements for Dark Sky compliance. Refractive lens models incorporate a molded lens assembly designed for maximum forward throw. Solid state LED Crossfour MAXX luminaires are thermally optimized with eight lumen packages in cool 5000K, neutral 4000K, or warm 3000K LED color temperature (CCT).

Electrical
LED driver is mounted to the die-cast aluminum housing for optimal heat sinking. LED thermal management system incorporates both conduction and natural convection to transfer heat rapidly away from the LED driver. All 8TW and 12DW models operate in -40°C to 40°C (-40°F to 104°F). High ambient 50°C (122°F) models available in 5BW and 8TW models only. Crossfour MAXX luminaires maintain greater than 89% of initial light output after 72,000 hours of operation. Four half-inch NPT conduit entries in back box allow for thru-branch wiring. Back box is an authorized electrical wiring compartment. Integral LED electronic driver incorporates surge protection. 120-277V 50/60Hz, 480V 60Hz, or 347V 60Hz electrical operation. 480V is compatible for use with 480V Wye systems only.

Emergency Egress
Optional integral cold weather battery emergency egress includes emergency operation test switch (available in 5BW and 8TW models only), an AC-ON indicator light and a minimum guaranteed rated sealed maintenance-free nickel-metal hydride battery pack. The battery/emergency lighting LEDs are wired to provide redundant emergency lighting. Listed to UL Standard 924, Emergency Lighting.

Area and Site Pole Mounting
Optional Crossfour MAXX pole adapter fixture features internal bolt guides for supplied twin support rods, allowing for easy positioning of the fixture during installation to pole. Supplied with round plate adapter plate. Optional tenon adapter fits 2-3/8" or 3-1/2" O.D. Tenon.

Finish
Crossfour MAXX is protected with a super TGIC carbon bronze or summit white polyester powder coat paint. Super TGIC powder coat paint withstand extreme climate conditions while providing superior color and gloss retention of the installed life.

Warranty
Five-year warranty.

XTOR
CROSSTOUR
MAXX LED

APPLICATIONS:
WALL / SURFACE
INVERTED
SITE LIGHTING

DIMENSIONS

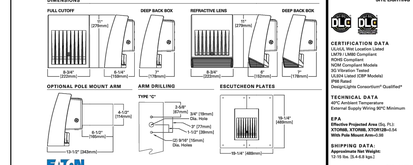

CERTIFICATION DATA
UL/cUL Wet Location Listed
LM79 / LM80 Compliant
IDA Compliant
NOM Compliant Models
3G Vibration Tested
UL924 Listed (CBP Models)
IP65 / IK08
DesignLights Consortium® Qualified*

TECHNICAL DATA
40°C Ambient Temperature
External Surgeon Wiring 90°C Minimum

EPA
Effective Projected Area (Sq. Ft.): **XTORB, XTORB, XTOR1B=0.54**
With Pole Mount Arm=3.98

SHIPPING DATA:
Approximate Net Weight:
12.15 lbs. (5.4 KG Apx.)

EATON
Powering Business Worldwide

TD514005EN
September 17, 2018 3:03 PM

*www.DesignLights.org

D-Series Size 1
LED Area Luminaire

Catalog #
Type
Project
Comments
Date
Prepared by

Specifications
EPA: 1.05 ft² (0.098 m²)
Length: 33" (838 mm)
Width: 13" (330 mm)
Height H1: 7-1/2" (191 mm)
Height H2: 3-1/2" (89 mm)
Weight (max): 27 lbs (12.2 kg)

Introduction
The modern styling of the D-Series is striking yet unobtrusive - making a bold, progressive statement even as it blends seamlessly with its environment. The D-Series distills the benefits of the latest in LED technology into a high performance, high efficacy, long-life luminaire. The outstanding photometric performance results in sites with excellent uniformity, greater pole spacing and lower power density. It is ideal for replacing up to 750W metal halide in pedestrian and area lighting applications with typical energy savings of 65% and expected service life of over 100,000 hours.

Ex Capable options indicated by this color background.

Ordering Information — **EXAMPLE:** DSX1 LED P7 40K T3M MVOLT SPA NLTAIR2 PIRHN DDBXD

DSX1 LED

Series	LEDs	Color temperature	Distribution	Voltage	Mounting
DSX1 LED	**Forward optics** P1 P5 P2 P6 P3 P7 P4 P8 **Rotated optics** P9 P13 P11 P14 P12	30K 3000 K 40K 4000 K 50K 5000 K	T1S Type I Short T2S Type II Short T2M Type II Medium T3S Type III Short T3M Type III Medium T4M Type IV Medium T5W Type V Wide T5VW Type V Very Wide T5VS Type V Very Short T6S Type VI Short T6M Type VI Medium T6W Type VI Wide BLC Backlight control [1] LCCO Left corner cutoff [1] RCCO Right corner cutoff [1]	MVOLT [2,3] 120 [3] 208 [3] 240 [3] 277 [3] 347 [3] 480 [3]	**Shipped included** SPA Square pole mounting RPA Round pole mounting WBA Wall bracket SPUMBA Square pole universal mounting adapter [7] RPUMBA Round pole universal mounting adapter [7] **Shipped separately** KMAA DDBXD U Mast arm mounting bracket adapter (specify finish) [7]

Control options	Other options	Finish
Shipped installed NCSNR2 NLTAIR2 nLight AIR generation 2 enabled [7] PIRHN Network, high/low motion/ambient sensor [8] PER NEMA twist-lock receptacle only (controls ordered separately) [7] PER5 Five-pin receptacle only (controls ordered separately) [7,9] PER7 Seven-pin receptacle only (controls ordered separately) [7,9] DMG 0-10v dimming wires pulled outside fixture (for use with an external control, ordered separately) [7] DS Dual switching [7,9,10]	PIR High/low, motion/ambient sensor, 8-15' mounting height, ambient sensor enabled at 5fc [7,10] PIRH High/low, motion/ambient sensor, 15-30' mounting height, ambient sensor enabled at 5fc [7,10] PIRH1FC3V High/low, motion/ambient sensor, 8-15' mounting height, ambient sensor enabled at 1fc [7,10] PIRHN1FC3V Bi-level, motion/ambient sensor, 15-30' mounting height, ambient sensor enabled at 1fc [7,10] FAO Field adjustable output [7]	**Shipped installed** HS House-side shield [7] SF Single face (120, 277, 347V) [7] DF Double face (208, 240, 480V) [7] LWR Left rotated optics [7] RWR Right rotated optics [7] **Shipped separately** BS Bird spikes [7] EGS External glare shield [7]

DDBXD Dark bronze
DDLXD Black
DNAXD Natural aluminum
DWHXD White
DSSTXD Textured dark bronze
DBLXD Textured black
DNATXD Textured natural aluminum
DWHGXD Textured white

LITHONIA LIGHTING.
COMMERCIAL OUTDOOR

One Lithonia Way • Conyers, Georgia 30012 • Phone 800-705-SERV (7378) • www.lithonia.com
© 2011-2019 Acuity Brands Lighting, Inc. All rights reserved.

DSX1-LED
Rev. 09/11/19
Page 1 of 8

D-Series Size 2
LED Area Luminaire

Catalog Number
Notes
Type

Specifications
EPA: 1.1 ft² (0.102 m²)
Length: 39" (991 mm)
Width: 15" (381 mm)
Height: 7-1/4" (184 mm)
Height 2: (optional) 3.5"
Weight: 36lbs

Introduction
The modern styling of the D-Series is striking yet unobtrusive - making a bold, progressive statement even as it blends seamlessly with its environment.

The D-Series distills the benefits of the latest in LED technology into a high performance, high efficacy, long-life luminaire. The outstanding photometric performance results in sites with excellent uniformity, greater pole spacing and lower power density. The Size 2 is ideal for replacing 400-1000W metal halide in area lighting applications with energy savings of up to 80% and expected service life of over 100,000 hours.

Ex Capable options indicated by this color background.

Ordering Information — **EXAMPLE:** DSX2 LED P7 40K T3M MVOLT SPA NLTAIR2 PIRHN DDBXD

DSX2 LED

Series	LEDs	Color temperature	Distribution	Voltage	Mounting
DSX2 LED	**Forward optics** P1 P5 P2 P6 P3 P7 P4 P8 **Rotated optics** P9 P13 P11 P14 P12	30K 3000 K 40K 4000 K 50K 5000 K	T1S Type I Short T2S Type II Short T2M Type II Medium T3S Type III Short T3M Type III Medium T4M Type IV Medium T5W Type V Wide T5VW Type V Very Wide T5VS Type V Very Short T6S Type VI Short T6M Type VI Medium T6W Type VI Wide BLC Backlight control [1] LCCO Left corner cutoff [1] RCCO Right corner cutoff [1]	MVOLT [2,3] 120 [3] 208 [3] 240 [3] 277 [3] 347 [3] 480 [3]	**Shipped included** SPA Square pole mounting RPA Round pole mounting WBA Wall bracket SPUMBA Square pole universal mounting adapter [7] RPUMBA Round pole universal mounting adapter [7] **Shipped separately** KMAA DDBXD U Mast arm mounting bracket adapter (specify finish) [7]

Control options	Other options	Finish
Shipped installed NCSNR2 nLight AIR generation 2 enabled [7] PIRHN Network, Bi-Level motion/ambient sensor [8] PER NEMA twist-lock receptacle only (no controls) [7] PER5 Five-pin receptacle only (no controls) [7,9] PER7 Seven-pin receptacle only (no controls) [7,9] DMG 0-10v dimming wires pulled out back of housing for external control (no controls) [7] DS Dual switching [7,9,10]	PIRH Bi-level, motion/ambient sensor, 15-30' mounting height, ambient sensor enable at 5fc FAO Field Adjustable Output [8]	**Shipped installed** HS House-side shield [7] SF Single face (120, 277, 347V) [7] DF Double face (208, 240, 480V) [7] LWR Left rotated optics [7] RWR Right rotated optics [7] **Shipped separately** BS Bird spikes [7] EGS External glare shield [7]

DDBXD Dark bronze
DDLXD Black
DNAXD Natural aluminum
DWHXD White
DSSTXD Textured dark bronze
DBLXD Textured black
DNATXD Textured natural aluminum
DWHGXD Textured white

LITHONIA LIGHTING.
COMMERCIAL OUTDOOR

One Lithonia Way • Conyers, Georgia 30012 • Phone 800-705-SERV (7378) • www.lithonia.com
© 2011-2019 Acuity Brands Lighting, Inc. All rights reserved.

DSX2-LED
Rev. 09/11/19
Page 1 of 8

Schedule

Symbol	Label	QTY	Catalog Number	Description	Lamp	Number Lamps	Lumens per Lamp	LLF	Wattage
	W1	5	DSX1 LED P1 40K T3M MVOLT WALL MOUNT	DSX1 LED P1 40K T3M MVOLT	LED	1	6764	0.9	54
	W2	5	DSX1 LED P3 40K T3M MVOLT WALL MOUNT	DSX1 LED P3 40K T3M MVOLT	LED	1	12214	0.9	102
	W3	13	DSX1 LED P3 40K T4M MVOLT WALL MOUNT	DSX1 LED P3 40K T4M MVOLT	LED	1	12308	0.9	102
	W4	2	DSX1 LED P6 40K T4M MVOLT WALL MOUNT	DSX1 LED P6 40K T4M MVOLT	LED	1	18634	0.9	163
	W5	6	XTOR6B-W	CROSSTOUR 58W WALL MOUNT LED	EATON LED 4000K	1	6036	0.9	58
	P1	16	DSX2 LED P5 40K T5W MVOLT	DSX2 LED P5 40K T5W MVOLT	LED	1	39142	0.9	321
	P2	2	DSX2 LED P1 40K T2M MVOLT	DSX2 LED P1 40K T2M MVOLT	LED	1	18912	0.9	140
	P3	1	DSX2 LED P3 40K TFTM MVOLT HS	DSX2 LED P3 40K TFTM MVOLT with houseside shield	LED	1	22060	0.9	217
	P4	1	DSX2 LED P2 40K BLC MVOLT	DSX2 LED P2 40K BLC MVOLT	LED	1	19720	0.9	185
	P5	2	DSX2 LED P1 40K T4M MVOLT	DSX2 LED P1 40K T4M MVOLT	LED	1	18551	0.9	140
	P6	1	DSX2 LED P1 40K BLC MVOLT	DSX2 LED P1 40K BLC MVOLT	LED	1	15538	0.9	140
	P7	1	DSX2 LED P2 40K TFTM MVOLT HS	DSX2 LED P2 40K TFTM MVOLT with houseside shield	LED	1	18779	0.9	185

Statistics

Description	Symbol	Avg	Max	Min	Max/Min	Avg/Min
DRIVEWAY - NORTH		1.2 fc	3.0 fc	0.5 fc	6.0:1	2.4:1
DRIVEWAY - SOUTH		2.1 fc	4.5 fc	0.4 fc	11.3:1	5.3:1
ENTRANCE - NORTH		1.8 fc	2.8 fc	0.6 fc	4.7:1	3.0:1
ENTRANCE - NW		1.0 fc	1.6 fc	0.5 fc	3.2:1	2.0:1
ENTRANCE- SW		0.8 fc	1.1 fc	0.5 fc	2.2:1	1.6:1
LOADING AREA		2.7 fc	4.6 fc	0.8 fc	5.8:1	3.4:1
PARKING LOT - SE		2.0 fc	4.3 fc	0.6 fc	7.2:1	3.3:1
PARKING LOT -NW		2.3 fc	4.6 fc	0.5 fc	9.2:1	4.6:1
SIDEWALK		3.2 fc	4.9 fc	1.0 fc	4.9:1	3.2:1
SITE		0.5 fc	13.3 fc	0.0 fc	N/A	N/A
SITE2		0.4 fc	0.9 fc	0.3 fc	3.0:1	1.3:1
SPILL		0.0 fc	1.7 fc	0.0 fc	N/A	N/A

GRAPHIC SCALE
40 20 0 40
SCALE IN FEET

SEE SHEET LP-0 FOR LIGHTING NOTES

SEE SHEET LP-1 FOR LIGHTING DETAILS

FOR PERMITTING PURPOSES ONLY NOT RELEASED FOR CONSTRUCTION

Architecture
Engineering
Environmental
Land Surveying

BL Companies
355 Research Parkway
Meriden, CT 06450
(203) 630-1406
(203) 630-2615 Fax

COMMONWEALTH OF MASSACHUSETTS
ROBERT M. BOLES JR.
No. 54612
REGISTERED PROFESSIONAL ENGINEER

PROPOSED DEVELOPMENT
100 INDUSTRIAL PARK ROAD
HINGHAM, MASSACHUSETTS

REVISIONS

No.	Date	Desc.
1.	05/12/2020	Revised per Staff and Commision Comments
2.	06/01/2020	Revised per Staff and Commision Comments

Designed	L.M.W.
Drawn	L.M.W.
Reviewed	R.Z.
Scale	1"=40'
Project No.	1901517
Date	03/06/2020
CAD File: LP190151701	

Title
LIGHTING PLAN

Sheet No.
LP-2

Xref (s) : BD190151701 ; XV190151701 ; XC190151701 ; XC190151702 ; XC190151703 ; XE190151701

Jul 13, 2020 8:12pm ddoss G:\JOBS\P L&A\1901517\DWG\LP190151701.dwg
Layout(s): ARCH E (ddoss) V5 L&A\1901517\DWG\LP190151701.DWG\LP-2-2020-X-REC.

© 2020 BL COMPANIES, INC. THESE DRAWINGS SHALL NOT BE UTILIZED BY ANY PERSON, FIRM OR CORPORATION WITHOUT THE SPECIFIC WRITTEN PERMISSION OF BL COMPANIES.

SITE WORK GENERAL NOTES

1. THESE PLANS ARE FOR PERMITTING PURPOSES ONLY AND ARE NOT FOR CONSTRUCTION.

2. ALL CONSTRUCTION SHALL COMPLY WITH THE PROJECT SPECIFICATION MANUAL; CORPORATION STANDARDS, MUNICIPAL STANDARDS AND SPECIFICATIONS, COUNTY STANDARDS AND SPECIFICATIONS, THE COMMONWEALTH OF MASSACHUSETTS DEPARTMENT OF TRANSPORTATION STANDARDS AND SPECIFICATIONS, 2010 ADA STANDARDS, AND STATE BUILDING CODE IN THE ABOVE REFERENCED INCREASING HIERARCHY. IF SPECIFICATIONS ARE IN CONFLICT, THE MORE STRINGENT SPECIFICATION SHALL APPLY. ALL CONSTRUCTION SHALL BE PERFORMED IN ACCORDANCE WITH ALL APPLICABLE OSHA, FEDERAL, STATE AND LOCAL REGULATIONS.

3. REFER TO OTHER PLANS BY OTHER DISCIPLINES, DETAILS AND PROJECT MANUAL FOR ADDITIONAL INFORMATION. THE CONTRACTOR SHALL VERIFY ALL SITE AND BUILDING CONDITIONS IN THE FIELD AND CONTACT THE CIVIL ENGINEER AND ARCHITECT IF THERE ARE ANY QUESTIONS OR CONFLICTS REGARDING THE CONSTRUCTION DOCUMENTS AND/OR FIELD CONDITIONS, SO THAT APPROPRIATE REVISIONS CAN BE MADE PRIOR TO BIDDING. ANY CONFLICT BETWEEN THE DRAWINGS AND SPECIFICATIONS SHALL BE CONFIRMED WITH THE OWNER'S CONSTRUCTION MANAGER PRIOR TO BIDDING.

4. DO NOT INTERRUPT EXISTING UTILITIES SERVICING FACILITIES OCCUPIED AND USED BY THE OWNER OR OTHERS DURING OCCUPIED HOURS EXCEPT WHEN SUCH INTERRUPTIONS HAVE BEEN AUTHORIZED IN WRITING BY THE OWNER AND THE LOCAL MUNICIPALITIES. INTERRUPTIONS SHALL ONLY OCCUR AFTER ACCEPTABLE TEMPORARY SERVICE HAS BEEN PROVIDED.

5. THE CONTRACTOR SHALL ABIDE BY ALL OSHA, FEDERAL, STATE, AND LOCAL REGULATIONS WHEN OPERATING CRANES, BOOMS, HOISTS, ETC. IN CLOSE PROXIMITY TO OVERHEAD ELECTRIC LINES. IF CONTRACTOR MUST OPERATE EQUIPMENT CLOSE TO ELECTRIC LINES, CONTACT POWER COMPANY TO MAKE ARRANGEMENTS FOR PROPER SAFEGUARDS. ANY UTILITY COMPANY FEES SHALL BE PAID FOR BY THE CONTRACTOR.

6. THE CONTRACTOR SHALL PROVIDE AS-BUILT RECORD DRAWINGS OF ALL CONSTRUCTION (INCLUDING UNDERGROUND UTILITIES AND STORMWATER SYSTEM) TO THE OWNER AT THE END OF CONSTRUCTION.

7. THE ARCHITECT OR ENGINEER IS NOT RESPONSIBLE FOR SITE SAFETY MEASURES TO BE EMPLOYED DURING CONSTRUCTION. THE ARCHITECT AND ENGINEER HAVE NO CONTRACTUAL DUTY TO CONTROL THE SAFEST METHODS OR MEANS OF THE WORK, JOB SITE RESPONSIBILITIES, SUPERVISION OR TO SUPERVISE SAFETY AND DOES NOT VOLUNTARILY ASSUME ANY SUCH DUTY OR RESPONSIBILITY.

8. THE CONTRACTOR SHALL COMPLY WITH CFR 29 PART 1926 FOR EXCAVATION, TRENCHING, AND TRENCH PROTECTION REQUIREMENTS.

9. INFORMATION ON EXISTING UTILITIES AND STORM DRAINAGE SYSTEMS HAS BEEN COMPILED FROM AVAILABLE INFORMATION INCLUDING UTILITY COMPANY AND MUNICIPAL OR COUNTY OR STATE RECORD MAPS AND/OR FIELD SURVEY AND IS NOT GUARANTEED CORRECT OR COMPLETE. UTILITIES AND STORM DRAINAGE SYSTEMS ARE SHOWN TO ALERT THE CONTRACTOR TO THEIR PRESENCE AND THE CONTRACTOR IS SOLELY RESPONSIBLE FOR DETERMINING ACTUAL LOCATIONS AND ELEVATIONS OF ALL UNDERGROUND AND OVERHEAD UTILITIES AND STORM DRAINAGE SYSTEMS INCLUDING SERVICES. PRIOR TO DEMOLITION OR CONSTRUCTION, THE CONTRACTOR SHALL CONTACT MA DIG SAFE 72 HOURS BEFORE COMMENCEMENT OF WORK AT (888) 344-7233 OR AT 811 AND VERIFY ALL UTILITY AND STORM DRAINAGE SYSTEM LOCATIONS. THE CONTRACTOR SHALL EMPLOY THE USE OF A UTILITY LOCATING COMPANY TO PROVIDE SUBSURFACE UTILITY ENGINEERING CONSISTING OF DESIGNATING UTILITIES AND STORM PIPING ON PRIVATE PROPERTY WITHIN THE CONTRACT LIMIT AND CONSISTING OF DESIGNATING AND LOCATING WHERE PROPOSED UTILITIES AND STORM PIPING CROSS EXISTING UTILITIES AND STORM PIPING WITHIN THE CONTRACT LIMITS.

10. DO NOT SCALE DRAWINGS. DIMENSIONS GOVERN OVER SCALED DIMENSIONS.

11. IF PLANS AND OR SPECIFICATIONS ARE IN CONFLICT, THE MOST COSTLY SHALL APPLY.

12. ALL CONTRACTORS AND SUBCONTRACTORS SHALL OBTAIN COMPLETE DRAWING PLAN SETS FOR BIDDING AND CONSTRUCTION. PLAN SETS OR PLAN SET ELECTRONIC POSTINGS SHALL NOT BE DISASSEMBLED INTO PARTIAL PLAN SETS FOR USE BY CONTRACTORS AND SUBCONTRACTORS OF INDIVIDUAL TRADES. IT SHALL BE THE CONTRACTOR'S AND SUBCONTRACTOR'S RESPONSIBILITY TO OBTAIN COMPLETE PLAN SETS OR COMPLETE PLAN SET ELECTRONIC POSTINGS FOR USE IN BIDDING AND CONSTRUCTION.

13. ALL NOTES AND DIMENSIONS DESIGNATED "TYPICAL" APPLY TO ALL LIKE OR SIMILAR CONDITIONS THROUGHOUT THE PROJECT.

14. CONTRACTOR(S) TO TAKE AND VERIFY ALL DIMENSIONS AND CONDITIONS OF THE WORK AND BE RESPONSIBLE FOR COORDINATION OF SAME. FIELD VERIFY ALL EXISTING CONDITIONS PRIOR TO START OF WORK.

15. BL COMPANIES WILL PREPARE FINAL CONSTRUCTION DOCUMENTS SUITABLE FOR BIDDING AND CONSTRUCTION. PROGRESS SETS AND PERMITTING SETS OF THESE DOCUMENTS ARE NOT SUITABLE FOR THOSE PURPOSES. IF CLIENT ELECTS TO SOLICIT BIDS OR ENTER INTO CONSTRUCTION CONTRACTS UTILIZING CONSTRUCTION DOCUMENTS THAT ARE NOT YET FINAL, CONSULTANT SHALL NOT BE RESPONSIBLE FOR ANY COSTS OR DELAY ARISING AS A RESULT.

16. NO CONSTRUCTION OR DEMOLITION SHALL BEGIN UNTIL APPROVAL OF THE FINAL PLANS IS GRANTED BY ALL GOVERNING AND REGULATORY AGENCIES.

17. THE CONTRACTOR SHALL SUBMIT SHOP DRAWINGS OF ALL PRODUCTS AND MATERIALS PER PLANS AND SPECIFICATIONS TO THE OWNER AND CIVIL ENGINEER FOR REVIEW AND APPROVAL PRIOR TO FABRICATION OR DELIVERY TO THE SITE. ALLOW A MINIMUM OF 14 WORKING DAYS FOR REVIEW.

18. THE CONTRACTOR SHALL FOLLOW THE SEQUENCE OF CONSTRUCTION NOTES PROVIDED ON THE SEDIMENT AND EROSION CONTROL NOTES SHEET.

19. THE CONTRACTOR SHALL REFERENCE ARCHITECTURAL PLANS FOR EXACT DIMENSIONS AND CONSTRUCTION DETAILS OF BUILDING, RAISED CONCRETE SIDEWALKS, LANDINGS, RAMPS, AND STAIRS.

20. SHOULD ANY UNCHARTED OR INCORRECTLY CHARTED, EXISTING PIPING OR OTHER UTILITY BE UNCOVERED DURING EXCAVATION, CONSULT THE CIVIL ENGINEER IMMEDIATELY FOR DIRECTIONS BEFORE PROCEEDING FURTHER WITH WORK IN THIS AREA.

21. ALL SITE DIMENSIONS ARE REFERENCED TO THE FACE OF CURBS OR EDGE OF PAVING AS APPLICABLE UNLESS OTHERWISE NOTED. ALL BUILDING DIMENSIONS ARE REFERENCED TO THE OUTSIDE FACE OF THE STRUCTURE.

22. THE CONTRACTOR SHALL PROVIDE AND MAINTAIN TRAFFIC DEVICES FOR PROTECTION OF VEHICLES AND PEDESTRIANS CONSISTING OF DRUMS, BARRIERS, SIGNS, LIGHTS, FENCES, TEMPORARY WALKWAYS, TRAFFIC CONTROLLERS AND UNIFORMED TRAFFIC OFFICERS AS REQUIRED OR AS ORDERED BY THE ENGINEER OR AS REQUIRED BY THE LOCAL GOVERNING AUTHORITIES OR AS REQUIRED BY PERMIT STIPULATIONS OR AS REQUIRED BY THE OWNER. CONTRACTOR SHALL MAINTAIN ALL TRAFFIC LANES AND PEDESTRIAN WALKWAYS FOR USE AT ALL TIMES UNLESS WRITTEN APPROVAL FROM THE APPROPRIATE GOVERNING AGENCY IS GRANTED.

23. TRAFFIC CONTROL SIGNAGE SHALL CONFORM TO THE COMMONWEALTH DOT STANDARD DETAIL SHEETS AND THE MANUAL OF UNIFORM TRAFFIC CONTROL DEVICES. SIGNS SHALL BE INSTALLED PLUMB WITH THE EDGE OF THE SIGN 2' OFF THE FACE OF THE CURB, AND WITH 7' VERTICAL CLEARANCE UNLESS OTHERWISE DETAILED OR NOTED.

24. REFER TO DETAIL SHEETS FOR PAVEMENT, CURBING, AND SIDEWALK INFORMATION.

25. THE CONTRACT LIMIT IS THE PROPERTY LINE UNLESS OTHERWISE SPECIFIED OR SHOWN ON THE CONTRACT DRAWINGS.

26. THE CONTRACTOR SHALL SUBMIT A SHOP DRAWING OF THE PAVEMENT MARKING PAINT MIXTURE PRIOR TO STRIPING.

27. PAVEMENT MARKING KEY:

4" SYL 4" SOLID YELLOW LINE
4" SWL 4" SOLID WHITE LINE
12" SWSB 12" SOLID WHITE STOP BAR

28. PARKING SPACES SHALL BE STRIPED WITH 4" SWL; HATCHED AREA SHALL BE STRIPED WITH 4" SWL AT A 45° ANGLE, 2' ON CENTER. HATCHING, SYMBOLS, AND STRIPING FOR HANDICAPPED SPACES SHALL BE PAINTED BLUE. OTHER MARKINGS SHALL BE PAINTED WHITE OR AS NOTED.

29. ALL PARKING SPACES AND HATCHED AREAS SHALL HAVE TWO COATS OF PAVEMENT MARKINGS APPLIED TO STRIPING.

30. PAVEMENT MARKINGS SHALL BE HOT APPLIED TYPE IN ACCORDANCE WITH STATE DOT SPECIFICATIONS, UNLESS WHERE EPOXY RESIN PAVEMENT MARKINGS ARE INDICATED.

31. THE CONTRACTOR SHALL RESTORE ANY UTILITY STRUCTURE, DRAINAGE STRUCTURE, PIPE, UTILITY, PAVEMENT, CURBS, SIDEWALKS, LANDSCAPED AREAS, SWALE, PAVEMENT MARKINGS, OR SIGNAGE DISTURBED DURING DEMOLITION AND/OR CONSTRUCTION TO THEIR ORIGINAL CONDITION OR BETTER, AS APPROVED BY THE CIVIL ENGINEER, AND TO THE SATISFACTION OF THE OWNER AND TO THE TOWN OF HIGNHAM.

32. EXISTING BOUNDARY AND TOPOGRAPHY IS BASED ON DRAWING TITLED "ALTA/NSPS LAND TITLE SURVEY" FOR LAND OF JEB GROUP, LLC, 100 INDUSTRIAL PARK ROAD, HINGHAM, PLYMOUTH COUNTY, MASSACHUSETTS, SCALE 1"=50', DATED 9/27/2019, BY BL COMPANIES, INC.

33. ALTERNATIVE METHODS AND PRODUCTS OTHER THAN THOSE SPECIFIED MAY BE USED IF REVIEWED AND APPROVED BY THE OWNER, CIVIL ENGINEER, AND APPROPRIATE REGULATORY AGENCY PRIOR TO INSTALLATION DURING THE BIDDING PROCESS.

34. A DEMOLITION PERMIT IS REQUIRED FOR EXISTING BUILDINGS.

35. THE SITE IS CURRENTLY SERVICED BY PUBLIC WATER.

36. THE PROJECT PARCEL IS LOCATED PARTLY OR WHOLLY WITHIN A FEMA DESIGNATED FLOOD HAZARD AREA.

37. FIRE LANES SHALL BE ESTABLISHED AND PROPERLY DESIGNATED IN ACCORDANCE WITH THE REQUIREMENTS OF THE FIRE DISTRICT FIRE MARSHAL.

38. THE CONTRACTOR SHALL REMOVE CONFLICTING PAVEMENT MARKINGS IN THE ROADWAY BY METHOD APPROVED BY THE AUTHORITY HAVING JURISDICTION OR DOT AS APPLICABLE FOR THE LOCATION OF THE WORK.

39. ALL ADA DESIGNATED PARKING STALLS, ACCESS AISLES AND PEDESTRIAN WALKWAYS SHALL CONFORM TO THE CURRENT VERSION OF THE AMERICANS WITH DISABILITIES ACT STANDARDS FOR ACCESSIBLE DESIGN AND ANSI STANDARDS AND AS MAY BE SUPERCEDED BY THE STATE BUILDING CODE.

40. CONSTRUCTION OCCURRING ON THIS SITE SHALL COMPLY WITH NFPA 241 STANDARD FOR SAFEGUARDING CONSTRUCTION, ALTERATION AND DEMOLITION OPERATIONS, AND NFPA 1 FIRE CODE.

41. BUILDINGS, INCLUDING FOUNDATION WALLS AND FOOTINGS AND BASEMENT SLABS INDICATED ON THE DEMOLITION PLAN ARE TO BE REMOVED FROM THE SITE. CONTRACTOR SHALL SECURE ANY PERMITS, PAY ALL FEES AND PERFORM CLEARING AND GRUBBING AND DEBRIS REMOVAL PRIOR TO COMMENCEMENT OF GRADING OPERATIONS.

42. SEDIMENT AND EROSION CONTROLS AS SHOWN ON THE SEDIMENT AND EROSION CONTROL PLAN SHALL BE INSTALLED BY THE DEMOLITION CONTRACTOR PRIOR TO START OF DEMOLITION AND CLEARING AND GRUBBING OPERATIONS.

43. REMOVE AND DISPOSE OF ANY SIDEWALKS, FENCES, STAIRS, WALLS, DEBRIS AND RUBBISH REQUIRING REMOVAL FROM THE WORK AREA IN AN APPROVED OFF SITE LANDFILL, BY AN APPROVED HAULER. HAULER SHALL COMPLY WITH ALL REGULATORY REQUIREMENTS.

44. THE CONTRACTOR SHALL SECURE ALL PERMITS FOR HIS DEMOLITION AND DISPOSAL OF HIS DEMOLITION MATERIAL TO BE REMOVED FROM THE SITE. THE CONTRACTOR SHALL POST BONDS AND PAY PERMIT FEES AS REQUIRED. BUILDING DEMOLITION CONTRACTOR SHALL BE RESPONSIBLE FOR PERMITS AND DISPOSAL OF ALL BUILDING DEMOLITION DEBRIS IN AN APPROVED OFF-SITE LANDFILL.

45. ASBESTOS OR HAZARDOUS MATERIAL, IF FOUND ON SITE, SHALL BE REMOVED BY A LICENSED HAZARDOUS MATERIAL ABATEMENT CONTRACTOR.

46. THE CONTRACTOR SHALL PREPARE ALL MANIFEST DOCUMENTS AS REQUIRED PRIOR TO COMMENCEMENT OF DEMOLITION.

47. THE CONTRACTOR SHALL CUT AND PLUG, OR ARRANGE FOR THE APPROPRIATE UTILITY PROVIDER TO CUT AND PLUG SERVICE PIPING AT THE STREET LINE OR AT THE MAIN, AS REQUIRED BY THE UTILITY PROVIDER, OR AS OTHERWISE NOTED OR SHOWN ON THE CONTRACT DRAWINGS. ALL SERVICES MAY NOT BE SHOWN ON THIS PLAN. THE CONTRACTOR SHALL INVESTIGATE THE SITE PRIOR TO BIDDING TO DETERMINE THE EXTENT OF SERVICE PIPING TO BE REMOVED, CUT OR PLUGGED. THE CONTRACTOR SHALL PAY ALL UTILITY PROVIDER FEES FOR ABANDONMENTS AND REMOVALS.

48. THE CONTRACTOR SHALL PROTECT ALL IRON PINS, MONUMENTS AND PROPERTY CORNERS DURING DEMOLITION AND CONSTRUCTION ACTIVITIES. ANY CONTRACTOR DISTURBED PINS, MONUMENTS, AND OR PROPERTY CORNERS, ETC. SHALL BE RESET BY A LICENSED LAND SURVEYOR AT THE EXPENSE OF THE CONTRACTOR.

49. THE DEMOLITION CONTRACTOR SHALL STABILIZE THE SITE AND KEEP EROSION CONTROL MEASURES IN PLACE UNTIL THE COMPLETION OF HIS WORK OR UNTIL THE COMMENCEMENT OF WORK BY THE SITE CONTRACTOR, WHICHEVER OCCURS FIRST, AS REQUIRED OR DEEMED NECESSARY BY THE ENGINEER OR OWNER'S REPRESENTATIVE. THE SITE CONTRACTOR SHALL ASSUME RESPONSIBILITY FOR THE MAINTENANCE OF EXISTING EROSION AND SEDIMENTATION CONTROLS AND FOR INSTALLATION OF ANY NEW SEDIMENT AND EROSION CONTROLS AS PER THE SEDIMENT AND EROSION CONTROL PLAN, AT THAT TIME.

50. THE CONTRACTOR SHALL PUMP OUT BUILDING FUEL AND WASTE OIL TANKS (IF ANY ARE ENCOUNTERED) AND REMOVE FUEL TO AN APPROVED DISPOSAL AREA BY A LICENSED WASTE OIL HANDLING CONTRACTOR IN STRICT ACCORDANCE WITH STATE REQUIREMENTS.

51. IF IMPACTED OR CONTAMINATED SOIL IS ENCOUNTERED BY THE CONTRACTOR, THE CONTRACTOR SHALL SUSPEND EXCAVATION WORK OF IMPACTED SOIL AND NOTIFY THE OWNER AND/OR OWNER'S ENVIRONMENTAL CONSULTANT PRIOR TO PROCEEDING WITH FURTHER WORK IN THE IMPACTED SOIL LOCATION UNTIL FURTHER INSTRUCTED BY THE OWNER AND/OR OWNER'S ENVIRONMENTAL CONSULTANT.

52. EXISTING WATER SERVICES FOR BUILDINGS BEING DEMOLISHED SHALL BE DISCONNECTED AND CAPPED AT MAIN IN ACCORDANCE WITH THE REQUIREMENTS OF THE WATER UTILITY PROVIDER. REMOVE EXISTING ONSITE WATER PIPING TO BE ABANDONED TO MAIN UNLESS OTHERWISE SHOWN ON DEMOLITION PLANS OR AS REQUIRED BY THE WATER UTILITY PROVIDER TO BE REMOVED TO MAIN OR RIGHT OF WAY LINE.

53. EXISTING SANITARY LATERALS FOR BUILDINGS BEING DEMOLISHED SHALL BE PLUGGED WITH NON-SHRINK GROUT AT CURB LINE OR AT MAIN CONNECTION IN ACCORDANCE WITH THE SANITARY UTILITY PROVIDER REQUIREMENTS. REMOVE EXISTING LATERAL PIPING FROM SITE UNLESS OTHERWISE SHOWN ON DEMOLITION PLANS OR AS REQUIRED BY THE SANITARY UTILITY PROVIDER.

54. DOMESTIC GAS SERVICES FOR BUILDINGS BEING DEMOLISHED SHALL BE CAPPED AND SERVICE LINES PURGED OF RESIDUAL GAS IN ACCORDANCE WITH THE GAS UTILITY PROVIDER REQUIREMENTS. WORK TO BE COORDINATED BY AND PAID FOR BY THE CONTRACTOR. REMOVE EXISTING SERVICE PIPING ON SITE. ANY PROPANE TANKS SHALL BE PURGED OF RESIDUAL GAS BY PROPANE SUPPLIER. CONTRACTOR SHALL COORDINATE THIS WORK AND PAY NECESSARY FEES.

55. THE CONTRACTOR SHALL PROVIDE DISCONNECT NOTIFICATION TO THE MUNICIPALITY ENGINEERING DEPARTMENT, TELECOMMUNICATIONS UTILITY PROVIDER, GAS UTILITY PROVIDER, ELECTRIC UTILITY PROVIDER, SANITARY UTILITY PROVIDER, AND WATER UTILITY PROVIDER AT LEAST THREE WEEKS PRIOR TO BEGINNING DEMOLITION.

56. THE CONTRACTOR IS RESPONSIBLE FOR SECURING A DEMOLITION PERMIT FROM THE TOWN OF HINGHAM BUILDING DEPARTMENT AND MUST FURNISH THE REQUIRED APPLICATION MATERIAL AND PAY ALL FEES.

57. BACK FILL DEPRESSIONS, FOUNDATION HOLES AND REMOVED DRIVEWAY AREAS IN LOCATIONS NOT SUBJECT TO FURTHER EXCAVATION WITH SOIL MATERIAL APPROVED BY THE OWNER'S GEOTECHNICAL ENGINEER AND COMPACT, FERTILIZE, SEED AND MULCH DISTURBED AREAS NOT SUBJECT TO FURTHER SITE CONSTRUCTION. DEMOLISHED BUILDING FOUNDATION AREA AND BASEMENT IF PRESENT TO BE BACKFILLED WITH GRAVEL FILL OR MATERIAL SPECIFIED IN THE PROJECT GEOTECHNICAL REPORT IN LIFT THICKNESS SPECIFIED IN THE GEOTECHNICAL REPORT. COMPACT TO 95% MAX. DRY DENSITY PER ASTM D1557 AT MOISTURE CONTENT SPECIFIED IN GEOTECHNICAL REPORT AND EARTHWORK SPECIFICATION. EMPLOY WATERING EQUIPMENT FOR DUST CONTROL.

58. THE CONTRACTOR SHALL REPAIR PAVEMENTS BY INSTALLING TEMPORARY AND PERMANENT PAVEMENTS IN PUBLIC RIGHTS OF WAYS AS REQUIRED BY LOCAL GOVERNING AUTHORITIES AND THE MUNICIPALITY AND PER PERMIT REQUIREMENTS DUE TO DEMOLITION AND PIPE REMOVAL ACTIVITIES.

59. THE CONTRACTOR SHALL CUT AND REMOVE AT LUMINARE AND SIGN LOCATIONS ANY PROTRUDING CONDUITS TO 24" BELOW GRADE. THE CONTRACTOR SHALL REMOVE ALL CABLE AND CONDUCTORS FROM REMAINING LIGHTING AND SIGNING CONDUITS TO BE ABANDONED. ANY REMAINING LIGHTING TO REMAIN IN PLACE SHALL BE RECIRCUITED OR REWIRED AS NECESSARY TO REMAIN IN OPERATION.

60. NO WORK ON THIS SITE SHALL BE INITIATED BY THE CONTRACTOR UNTIL A PRE-CONSTRUCTION MEETING WITH OWNER AND THE CIVIL ENGINEER IS PERFORMED. THE CONTRACTOR SHOULD BE AWARE OF ANY SITE INFORMATION AVAILABLE SUCH AS GEOTECHNICAL AND ENVIRONMENTAL REPORTS. THE CONTRACTOR SHALL HAVE MA DIG SAFE MARK OUTS OF EXISTING UTILITIES COMPLETED PRIOR TO MEETING.

61. THE CONTRACTOR SHALL ARRANGE FOR AND INSTALL TEMPORARY OR PERMANENT UTILITY CONNECTIONS WHERE INDICATED ON PLAN OR AS REQUIRED. MAINTAIN UTILITY SERVICES TO BUILDINGS OR TO SERVICES TO REMAIN. CONTRACTOR TO COORDINATE WITH UTILITY PROVIDERS FOR INSTALLATION AND PAY UTILITY PROVIDER FEES.

62. THE CONTRACTOR SHALL NOT COMMENCE DEMOLITION OR UTILITY DISCONNECTIONS UNTIL AUTHORIZED TO DO SO BY THE OWNER.

63. THE CONTRACTOR OR DEMOLITION CONTRACTOR SHALL INSTALL TEMPORARY SHEETING OR SHORING AS NECESSARY TO PROTECT EXISTING AND NEW BUILDINGS, STRUCTURES AND UTILITIES DURING CONSTRUCTION AND DEMOLITION. SHEETING OR SHORING SHALL BE DESIGNED BY A PROFESSIONAL ENGINEER, LICENSED IN THIS STATE AND EVIDENCE OF SUCH SUBMITTED TO THE OWNER PRIOR TO INSTALLATION.

64. NO SALVAGE SHALL BE PERMITTED UNLESS PAID TO THE OWNER AS A CREDIT.

65. ANY EXISTING POTABLE WELL AND ANY ABANDONED SEPTIC TANKS/ABSORPTION AREAS NOT INTENDED FOR USE SHALL BE ABANDONED AND REMOVED PER THE TOWN OF HINGHAM AND MASSACHUSETTS DEPARTMENT OF PUBLIC HEALTH CODE REQUIREMENTS.

66. THE CONTRACTOR SHALL PRESERVE EXISTING VEGETATION WHERE POSSIBLE AND/OR AS NOTED ON DRAWINGS. REFER TO SEDIMENT AND EROSION CONTROL PLAN FOR LIMIT OF DISTURBANCE AND EROSION CONTROL NOTES.

67. TOPSOIL SHALL BE STRIPPED AND STOCKPILED ON SITE FOR USE IN FINAL LANDSCAPING.

68. FILL WITHIN FORMER BUILDING FOUNDATION SHALL BE CHECKED BY TEST PIT AND PROOF-ROLLING AND SHALL BE OBSERVED BY THE OWNER'S GEOTECHNICAL ENGINEER. SUBGRADE SHALL BE FORMED WITH REMOVAL AND REPLACEMENT OF FILL AND REMOVAL AND REPLACEMENT OF UNSUITABLE AND SOFT SUBGRADE MATERIAL AS REQUIRED BY THE GEOTECHNICAL ENGINEER. SEE GEOTECHNICAL REPORT AND EARTHWORK SPECIFICATIONS FOR FURTHER DESCRIPTION.

69. THE CONTRACTOR SHALL COMPACT FILL IN LIFT THICKNESS PER THE GEOTECHNICAL REPORT UNDER ALL PARKING, BUILDING, DRIVE, AND STRUCTURE AREAS TO 95% OF THE MAXIMUM DRY DENSITY AS DETERMINED BY ASTM D1557 (MODIFIED PROCTOR TEST), OR AS REQUIRED BY THE GEOTECHNICAL ENGINEER.

70. UNDERDRAINS SHALL BE ADDED, IF DETERMINED NECESSARY IN THE FIELD BY THE OWNER/GEOTECHNICAL ENGINEER, AFTER SUBGRADE IS ROUGH GRADED.

71. VERTICAL DATUM IS NAVD 88.

72. CLEARING LIMITS SHALL BE PHYSICALLY MARKED IN THE FIELD AND APPROVED BY THE TOWN OF HINGHAM PRIOR TO THE START OF WORK ON THE SITE.

73. PROPER CONSTRUCTION PROCEDURES SHALL BE FOLLOWED ON ALL IMPROVEMENTS WITHIN THIS PARCEL SO AS TO PREVENT THE SILTING OF ANY WATERCOURSE OR WETLANDS IN ACCORDANCE WITH THE REGULATIONS OF THE MASSDEP AND THE LATEST EDITION OF THE MASSACHUSETTS EROSION AND SEDIMENT CONTROL GUIDELINES FOR URBAN AND SUBURBAN AREAS. IN ADDITION, THE CONTRACTOR SHALL STRICTLY ADHERE TO THE SEDIMENT AND EROSION CONTROL PLAN CONTAINED HEREIN. THE CONTRACTOR SHALL BE RESPONSIBLE TO POST ALL BONDS AS REQUIRED BY THE LOCAL MUNICIPALITIES, OR SOIL CONSERVATION DISTRICT WHICH WOULD GUARANTEE THE PROPER IMPLEMENTATION OF THE PLAN.

74. ALL SITE WORK, MATERIALS OF CONSTRUCTION, AND CONSTRUCTION METHODS FOR EARTHWORK AND STORM DRAINAGE WORK SHALL CONFORM TO THE SPECIFICATIONS AND DETAILS AND APPLICABLE SECTIONS OF THE PROJECT SPECIFICATIONS MANUAL. OTHERWISE THIS WORK SHALL CONFORM TO THE COMMONWEALTH DEPARTMENT OF TRANSPORTATION SPECIFICATIONS AND PROJECT GEOTECHNICAL REPORT IF THERE IS NO PROJECT SPECIFICATIONS MANUAL. ALL FILL MATERIAL UNDER STRUCTURES AND PAVED AREAS SHALL BE PER THE ABOVE STATED APPLICABLE SPECIFICATIONS, AND/OR PROJECT GEOTECHNICAL REPORT, AND SHALL BE PLACED IN ACCORDANCE WITH THE APPLICABLE SPECIFICATIONS UNDER THE SUPERVISION OF A QUALIFIED PROFESSIONAL ENGINEER. MATERIAL SHALL BE COMPACTED IN LIFT THICKNESSES PER THE PROJECT GEOTECHNICAL REPORT TO 95% OF THE MAXIMUM DRY DENSITY AS DETERMINED BY ASTM D 1557 AT MOISTURE CONTENT INDICATED IN PROJECT GEOTECHNICAL REPORT.

75. ALL DISTURBANCE INCURRED TO MUNICIPAL, COUNTY, AND COMMONWEALTH PROPERTY DUE TO CONSTRUCTION SHALL BE RESTORED TO ITS PREVIOUS CONDITION OR BETTER, TO THE SATISFACTION OF THE MUNICIPALITY, COUNTY AND COMMONWEALTH AS APPLICABLE FOR THE LOCATION OF THE WORK.

76. ALL CONSTRUCTION WITHIN A DOT RIGHT OF WAY SHALL COMPLY WITH ALL DEPARTMENT OF TRANSPORTATION STANDARDS AND SPECIFICATIONS.

77. THE UTILITY PLAN DETAILS SITE INSTALLED PIPES UP TO 5' FROM THE BUILDING FACE. REFER TO DRAWINGS BY BL COMPANIES. FOR BUILDING CONNECTIONS. SITE CONTRACTOR SHALL SUPPLY AND INSTALL PIPE ADAPTERS AS NECESSARY AT BUILDING CONNECTION POINT OR AT EXISTING UTILITY OR PIPE CONNECTION POINT.

78. THE CONTRACTOR SHALL VISIT THE SITE AND VERIFY THE ELEVATION AND LOCATION OF ALL UTILITIES BY VARIOUS MEANS PRIOR TO BEGINNING ANY EXCAVATION. TEST PITS SHALL BE DUG AT ALL LOCATIONS WHERE PROPOSED SANITARY SEWERS AND WHERE PROPOSED STORM PIPING WILL CROSS EXISTING UTILITIES, AND THE HORIZONTAL AND VERTICAL LOCATIONS OF THE UTILITIES SHALL BE DETERMINED. THE CONTRACTOR SHALL CONTACT THE CIVIL ENGINEER IN THE EVENT OF ANY DISCOVERED OR UNFORESEEN CONFLICTS BETWEEN EXISTING AND PROPOSED SANITARY SEWERS, STORM PIPING AND UTILITIES SO THAT AN APPROPRIATE MODIFICATION MAY BE MADE.

79. UTILITY CONNECTION DESIGN AS REFLECTED ON THE PLAN MAY CHANGE SUBJECT TO UTILITY PROVIDER AND GOVERNING AUTHORITY STAFF REVIEW.

80. THE CONTRACTOR SHALL ENSURE THAT ALL UTILITY PROVIDERS AND GOVERNING AUTHORITY STANDARDS FOR MATERIALS AND CONSTRUCTION METHODS ARE MET. THE CONTRACTOR SHALL PERFORM PROPER COORDINATION WITH THE RESPECTIVE UTILITY PROVIDER.

81. THE CONTRACTOR SHALL ARRANGE FOR AND COORDINATE WITH THE RESPECTIVE UTILITY PROVIDERS FOR SERVICE INSTALLATIONS AND CONNECTIONS. THE CONTRACTOR SHALL COORDINATE WORK TO BE PERFORMED BY THE VARIOUS UTILITY PROVIDERS AND SHALL PAY ALL FEES FOR CONNECTIONS, DISCONNECTIONS, RELOCATIONS, INSPECTIONS, AND DEMOLITION UNLESS OTHERWISE STATED IN THE PROJECT SPECIFICATIONS MANUAL AND/OR GENERAL CONDITIONS OF THE CONTRACT.

82. ALL EXISTING PAVEMENT WHERE UTILITY PIPING IS TO BE INSTALLED SHALL BE SAW CUT. AFTER UTILITY INSTALLATION IS COMPLETED, THE CONTRACTOR SHALL INSTALL TEMPORARY AND/OR PERMANENT PAVEMENT REPAIR AS DETAILED ON THE DRAWINGS OR AS REQUIRED BY THE OWNER HAVING JURISDICTION.

83. ALL PIPES SHALL BE LAID ON STRAIGHT ALIGNMENTS AND EVEN GRADES USING A PIPE LASER OR OTHER ACCURATE METHOD.

84. SANITARY LATERAL SHALL MAINTAIN (10' MIN. HORIZONTAL 1.5' VERTICAL MIN.) SEPARATION DISTANCE FROM WATER LINES, OR ADDITIONAL PROTECTION MEASURES WILL BE REQUIRED WHERE PERMITTED, WHICH SHALL INCLUDE CONCRETE ENCASEMENT OF PIPING UNLESS OTHERWISE DIRECTED BY THE UTILITY PROVIDERS AND CIVIL ENGINEER.

85. RELOCATION OF UTILITY PROVIDER FACILITIES SHALL BE DONE IN ACCORDANCE WITH THE REQUIREMENTS OF THE UTILITY PROVIDER.

86. THE CONTRACTOR SHALL COMPACT THE PIPE BACKFILL IN 8" LIFTS ACCORDING TO THE PIPE BEDDING DETAILS. TRENCH BOTTOM SHALL BE STABLE IN HIGH GROUNDWATER AREAS. A PIPE FOUNDATION SHALL BE USED PER THE TRENCH DETAILS AND IN AREAS OF ROCK EXCAVATION.

87. CONTRACTOR TO PROVIDE STEEL SLEEVES AND ANNULAR SPACE SAND FILL FOR UTILITY PIPE AND CONDUIT CONNECTIONS UNDER FOOTINGS.

88. BUILDING UTILITY PENETRATIONS AND LOCATIONS ARE SHOWN FOR THE CONTRACTOR'S INFORMATION AND SHALL BE VERIFIED WITH THE BUILDING MEP, STRUCTURAL, AND ARCHITECTURAL DRAWINGS AND WITH THE OWNER'S CONSTRUCTION MANAGER.

89. ALL UTILITY CONSTRUCTION IS SUBJECT TO INSPECTION FOR APPROVAL PRIOR TO BACKFILLING, IN ACCORDANCE WITH THE APPROPRIATE UTILITY PROVIDER REQUIREMENTS.

90. A ONE-FOOT MINIMUM VERTICAL CLEARANCE BETWEEN WATER, GAS, ELECTRICAL, AND TELECOMMUNICATION LINES AND STORM PIPING SHALL BE PROVIDED. A SIX-INCH MINIMUM CLEARANCE SHALL BE MAINTAINED BETWEEN STORM PIPING AND SANITARY SEWER WITH A CONCRETE ENCASEMENT. AN 18-INCH TO 6-INCH VERTICAL CLEARANCE BETWEEN SANITARY SEWER PIPING AND STORM PIPING SHALL REQUIRE CONCRETE ENCASEMENT OF THE PROPOSED PIPING.

91. GRAVITY SANITARY SEWER PIPING AND PRESSURIZED WATERLINES SHALL BE LOCATED IN SEPARATE TRENCHES AT LEAST 10 FEET APART WHENEVER POSSIBLE. WHEN INSTALLED IN THE SAME TRENCH, THE WATER PIPE SHALL BE LAID ON A TRENCH BENCH AT LEAST 18 INCHES ABOVE THE TOP OF THE SANITARY SEWER PIPE AND AT LEAST 12 INCHES (PREFERABLY 18 INCHES) FROM THE SIDE OF THE SANITARY SEWER PIPE TRENCH.

92. SITE CONTRACTOR SHALL PROVIDE ALL BENDS, FITTINGS, ADAPTERS, ETC., AS REQUIRED FOR PIPE CONNECTIONS TO BUILDING STUB OUTS, INCLUDING ROOF DRAIN CONNECTIONS TO ROOF LEADERS AND TO STORM DRAINAGE SYSTEM, AND FOOTING DRAIN CONNECTIONS TO STORM DRAINAGE SYSTEM.

93. MANHOLE RIMS AND CATCH BASIN GRATES SHALL BE SET TO ELEVATIONS SHOWN. SET ALL EXISTING MANHOLE RIMS AND VALVE COVERS TO BE RAISED OR LOWERED FLUSH WITH FINAL GRADE AS NECESSARY.

94. SITE CONTRACTOR SHALL COORDINATE INSTALLATION OF CONDUIT AND CABLES FOR SITE LIGHTING WITH THE BUILDING ELECTRICAL CONTRACTOR.

95. CONTRACTOR SHALL COORDINATE INSTALLATION FOR ELECTRICAL SERVICES TO ANY PYLON OR MONUMENT SIGNS AND SITE LIGHTING WITH THE BUILDING ELECTRICAL CONTRACTOR.

96. THE CONTRACTOR SHALL ARRANGE AND COORDINATE WITH UTILITY PROVIDERS FOR WORK TO BE PERFORMED BY UTILITY PROVIDERS. THE CONTRACTOR SHALL PAY ALL UTILITY FEES UNLESS OTHERWISE STATED IN THE PROJECT SPECIFICATION MANUAL AND GENERAL CONDITIONS, AND REPAIR PAVEMENTS AS NECESSARY.

97. ELECTRIC, AND TELECOMMUNICATIONS SERVICES SHALL BE INSTALLED UNDERGROUND FROM A SERVICE POLE AS REQUIRED OR SHOWN ON BUILDING ELECTRICAL SITE PLAN. THE CONTRACTOR SHALL PROVIDE AND INSTALL AND BACKFILL PVC CONDUITS FOR TELECOMMUNICATIONS SERVICE, PVC CONDUITS FOR ELECTRIC SERVICE PRIMARY AND PVC CONDUITS FOR ELECTRICAL SECONDARY PER BUILDING ELECTRICAL PLANS, (SCHEDULE 80 UNDER PAVEMENT, SCHEDULE 40 IN NON PAVEMENT AREAS). SERVICES MAY BE INSTALLED IN A COMMON TRENCH WITH 12" CLEAR SPACE BETWEEN. MINIMUM COVER IS 36" ON ELECTRIC CONDUITS, AND 24" ON TELECOMMUNICATIONS CONDUITS. SERVICES SHALL BE MARKED WITH MAGNETIC LOCATOR TAPE AND SHALL BE BEDDED, INSTALLED, AND BACKFILLED IN ACCORDANCE WITH ELECTRIC UTILITY PROVIDER, AND TELECOMMUNICATIONS COMPANY STANDARDS. GALVANIZED STEEL ELECTRICAL CONDUIT SHALL BE USED AT POLE AND TRANSFORMER LOCATIONS. INSTALL HANDHOLES AS REQUIRED TO FACILITATE INSTALLATION AND AS REQUIRED BY UTILITY PROVIDER. INSTALL TRAFFIC LOAD QUALIFIED HANDHOLES IN VEHICULAR AREAS. INSTALL CONCRETE ENCASEMENT ON PRIMARY ELECTRIC CONDUITS IF REQUIRED BY ELECTRIC UTILITY PROVIDER.

98. ALL WATER LINES TO HAVE A MINIMUM COVER REQUIRED BY AQUARION WATER COMPANY. ALL LINES SHALL BE BEDDED IN 6" SAND AND INITIALLY BACKFILLED WITH 12" SAND.

99. ALL WATER MAINS, WATER SERVICES AND SANITARY SEWER LATERALS SHALL CONFORM TO THE APPLICABLE WATER UTILITY PROVIDER SPECIFICATIONS, AND TO THE APPLICABLE SANITARY SEWER PROVIDER SPECIFICATIONS, AS WELL AS TO OTHER APPLICABLE INDUSTRY CODES (AWWA) AND PROJECT SPECIFICATIONS FOR POTABLE WATER SYSTEMS, AND FOR SANITARY SEWER SYSTEMS.

100. THE CONTRACTOR SHALL MAINTAIN ALL FLOWS AND UTILITY CONNECTIONS TO EXISTING BUILDINGS WITHOUT INTERRUPTION UNLESS/UNTIL AUTHORIZED TO DISCONNECT BY THE OWNERS, THE CIVIL ENGINEER, UTILITY PROVIDERS AND GOVERNING AUTHORITIES.

101. THE CONTRACTOR MAY SUBSTITUTE MASONRY STRUCTURES FOR PRECAST STRUCTURES IF APPROVED BY THE CIVIL ENGINEER AND ALLOWED BY THE GOVERNING AUTHORITY ENGINEER OR OTHER GOVERNING AUTHORITY.

102. DUCTILE IRON PIPE, IF APPLICABLE, SHALL CONFORM TO AWWA C151 FOR CLASS 52 WITH CEMENT LINING IN ACCORDANCE WITH ANSI A21.4 FOR WATER MAINS AND SERVICES 3" ID AND LARGER. JOINTS SHALL BE MADE WITH CONCRETE THRUST BLOCKS OR WITH MEGAULUG RETAINER GLANDS OR WITH RODDING IN ACCORDANCE WITH PROJECT MANUAL SPECIFICATIONS AND IN ACCORDANCE WITH WATER UTILITY PROVIDER REQUIREMENTS TO EXTEND A MINIMUM OF 2 PIPE LENGTHS IN EITHER DIRECTION FROM FITTINGS AND ELBOWS (40 FT MINIMUM). ALL OTHER JOINTS SHALL BE PUSH-ON WITH RUBBER GASKETS (TYTON). USE OF OTHER TYPES OF RETAINER GLANDS SHALL REQUIRE USE WITH CLASS 53 OR GREATER DUCTILE IRON PIPE.

103. PIPING SHALL BE LAID FROM DOWNGRADIENT END OF PIPE RUN IN AN UPGRADIENT DIRECTION WITH BELL END FACING UPGRADE IN THE DIRECTION OF PIPE LAYING.

104. ALL RCP SHALL CONFORM TO THE REQUIREMENTS OF ASTM C-76; ALL RCP SHALL BE CLASS IV UNLESS OTHERWISE SHOWN. JOINTS SHALL CONFORM TO THE REQUIREMENTS OF ASTM C-443.

105. MANHOLE SECTIONS AND CONSTRUCTION SHALL CONFORM TO ASTM C-478.

106. HIGH DENSITY POLYETHYLENE (HDPE) STORM SEWER 12" OR GREATER IN DIAMETER SHALL BE N-12WT AS MANUFACTURED BY ADS. OR APPROVED EQUAL. HDPE PIPE SHALL HAVE SMOOTH INTERIOR AND CORRUGATED EXTERIOR AND SHALL MEET THE REQUIREMENTS OF AASHTO M294, TYPE S. PIPE SECTIONS SHALL BE JOINED WITH BELL-AND-SPIGOT JOINT MEETING THE REQUIREMENTS OF AASHTO M294. THE BELL SHALL BE AN INTEGRAL PART OF THE PIPE AND PROVIDE A MINIMUM PULL-APART STRENGTH OF 400 POUNDS. THE JOINT SHALL BE WATERTIGHT ACCORDING TO THE REQUIREMENTS OF ASTM D3212. GASKETS SHALL BE MADE OF POLYISOPRENE MEETING THE REQUIREMENTS OF ASTM F477. ALTERNATIVE HDPE PIPE MAY BE USED IF APPROVED BY THE ENGINEER AND OWNER'S CONSTRUCTION MANAGER PRIOR TO ORDERING.

107. GAS PIPE MATERIAL SHALL BE PER GAS COMPANY REQUIREMENTS.

108. POLYVINYL CHLORIDE PIPE (PVCP) FOR SANITARY PIPING SHALL HAVE BUILT-IN RUBBER GASKET JOINTS. PVCP SHALL CONFORM TO ASTM D3034 (SDR35) WITH COMPRESSION JOINTS AND MOLDED FITTINGS. PVCP SHALL BE INSTALLED IN ACCORDANCE WITH THE DETAILS, ASTM D2321 AND MANUFACTURER'S RECOMMENDED PROCEDURE.

109. THERE ARE WETLANDS LOCATED ON THE SITE BASED ON RESOURCE AREA DELINEATION PLAN, DRAWING NUMBER 1 OF 1, DATED SEPTEMBER 26, 2016 AND REVISED OCTOBER 12, 2016 BY BEALE ASSOCIATES. ORDER OF RESOURCE DELINEATION: DEP #034-1271 EXTENSION EXPIRES ON FEBRUARY 19, 2023.

110. THE CONTRACTOR SHALL CONTACT AND OBTAIN FROM COUNTY, MUNICIPAL, AND STATE SOURCES ALL CONSTRUCTION PERMITS INCLUDING SEWER AND WATER CONNECTION PERMITS AND ROADWAY CONSTRUCTION PERMITS. THE CONTRACTOR SHALL POST ALL BONDS, PAY ALL FEES, PROVIDE PROOF OF INSURANCE AND PROVIDE TRAFFIC CONTROL NECESSARY FOR THIS WORK.

111. AN EROSION CONTROL BOND MAY BE REQUIRED TO BE POSTED BY THE CONTRACTOR BEFORE THE START OF ANY ACTIVITY ON OR OFF SITE. THE AMOUNT OF THE EROSION CONTROL BOND WILL BE DETERMINED BY THE AUTHORITY HAVING JURISDICTION.

DEFINITIONS

MUNICIPALITY SHALL MEAN TOWN OF HINGHAM

STATE OR COMMONWEALTH SHALL MEAN COMMONWEALTH OF MASSACHUSETTS

WATER UTILITY PROVIDER SHALL MEAN AQUARION WATER COMPANY

SANITARY UTILITY PROVIDER SHALL MEAN ROSANO DAVIS SANITARY PUMPING INC.

GAS UTILITY PROVIDER SHALL MEAN NATIONAL GRID

TELECOMMUNICATIONS UTILITY PROVIDER SHALL MEAN GRANITE TELECOMMUNICATIONS

ELECTRIC UTILITY PROVIDER SHALL MEAN HINGHAM MUNICIPAL LIGHTING PLANT

FOR PERMITTING PURPOSES ONLY
NOT RELEASED FOR CONSTRUCTION

© 2020 BL COMPANIES, INC. THESE DRAWINGS SHALL NOT BE UTILIZED BY ANY PERSON, FIRM OR CORPORATION WITHOUT THE SPECIFIC WRITTEN PERMISSION OF BL COMPANIES.

7/13/2020, AKLOSE, G:\JOBS19\14\1901517\DWG\GN190151701.DWG,GN-1 24X36.

Xref (s): : BD190151701

Architecture
Engineering
Environmental
Land Surveying
BL Companies
355 Research Parkway
Meriden, CT 06450
(203) 630-1406
(203) 630-2615 Fax

COMMONWEALTH OF MASSACHUSETTS
ROBERT M. BOLES
CIVIL
No. 54612
REGISTERED PROFESSIONAL ENGINEER

PROPOSED DEVELOPMENT
100 INDUSTRIAL PARK ROAD
HINGHAM, MASSACHUSETTS

REVISIONS
No. Date Desc.

Designed	A.T.K.
Drawn	A.T.K.
Reviewed	K.W.H.
Scale	NONE
Project No.	1901517
Date	03/06/2020
CAD File: GN190151701	

Title
GENERAL NOTES

Sheet No.
GN-1

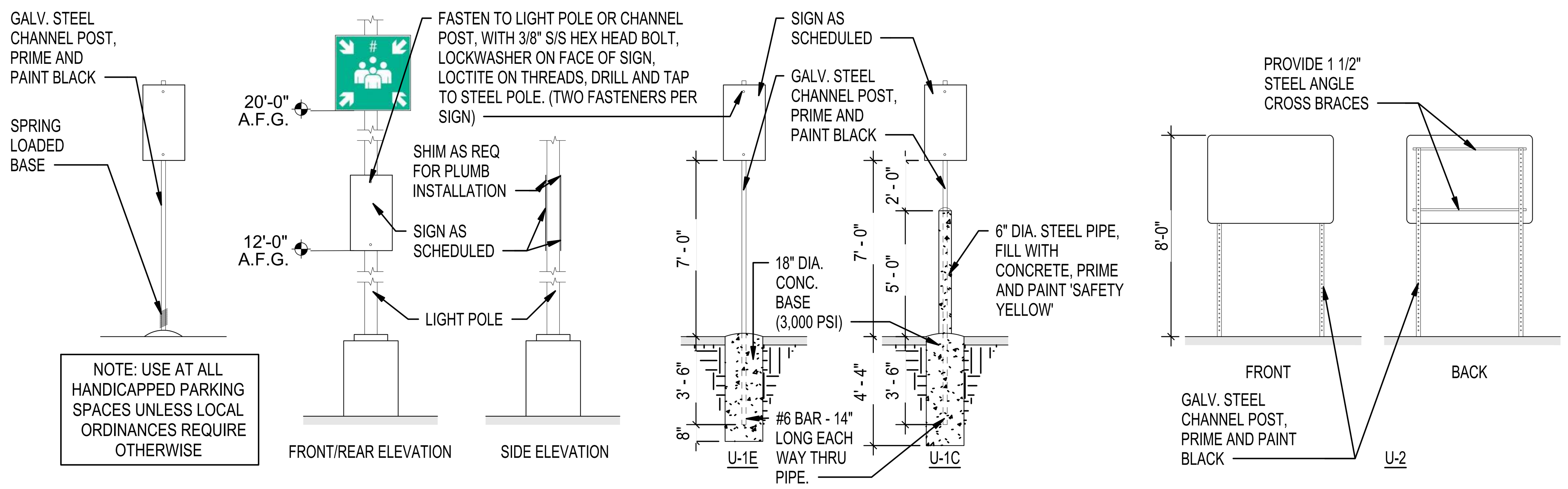

SIGN POST MOUNTED AT PAVED AREAS

SIGN AT SITE LIGHT POLE

SIGN IN LANDSCAPED ISLAND

POST AND PANEL SIGNS - MOUNTING U-1E, U-1C, U-2

DESCRIPTION
1. POST AND PANEL SIGNS WITH STANDARD SIZED MUTCD AND CUSTOM SIGN FACES.
2. ALL SIGNS INDICATED "DOT" SHALL CONFORM TO THE CURRENT MANUAL ON UNIFORM TRAFFIC CONTROL DEVICES (MUTCD) FROM THE FEDERAL HIGHWAY ADMINISTRATION.

MATERIALS AND CONSTRUCTION:
1. THE SIGN CONSISTS OF AN ALUMINUM SIGN PANEL ON A STEEL CHANNEL POST.
2. PANEL TO CONFORM TO MUTCD SPECIFICATIONS. SOLID ALUMINUM, 0.08" THICK. COMPOSITE MATERIALS ARE NOT ACCEPTABLE.
3. POSTS ARE TO BE STEEL CHANNEL POSTS, SEE DETAILS ON THIS SHEET FOR FURTHER POST SPECIFICATIONS.
4. SUPPORTS SHALL BE SUFFICIENT FOR SECURE MOUNTING OF THE SIGN.
5. ALL HARDWARE SHALL BE NON-CORROSIVE. IF ADDITIONAL THICKNESS OF MATERIAL OR ADDITIONAL INTERNAL BRACING IS REQUIRED FOR SECURE INSTALLATION OR TO PROVIDE STABILITY, ALTERATIONS SHALL BE REFLECTED IN SHOP DRAWINGS. WIND LOADING AND DURABILITY SHALL BE TAKEN INTO ACCOUNT IN ENGINEERING OF THE SIGN.

GRAPHICS AND TYPOGRAPHY:
1. GRAPHICS ARE TO BE HEAVY DUTY 3M REFLECTIVE VINYL.
2. CUSTOM GRAPHICS AND TYPOGRAPHY SIGNS ARE AVAILABLE FROM THE TENANT AS ELECTRONIC FILES.
3. COLORS ARE INDICATED ON THIS SHEET.

INSTALLATION:
1. LOCATIONS ARE GENERALLY NOTED ON THE ATTACHED LOCATION PLANS. THE CONTRACTOR IS RESPONSIBLE FOR FIELD VERIFYING ALL INSTALLATION CONDITIONS PRIOR TO FABRICATION.
2. MOUNTING U-1E SHALL BE USED IN FOR SIGNS IN COMPACTED EARTH; MOUNTING U-1C SHALL BE USED FOR SIGNS ON CONCRETE OR ASPHALTIC PAVING.
3. MOUNTING U-1E PROVIDES A 36" MOUNTING TUBE (STEEL CHANNEL POST) DRIVEN TO 1" TO 2" ABOVE GRADE. THE MOUNTING TUBE IS PAIRED WITH AN 18" BREAKAWAY SUPPORT TUBE (STEEL CHANNEL POST). THE SIGN POST SINKS TO THE BASE OF THE ANCHOR TUBE AND FASTENS TO THE ANCHOR TUBE AND BREAKAWAY SUPPORT WITH AN ANGLE BOLT.
4. INTENTIONALLY OMITTED.
5. TYPICAL SIGN PANEL INSTALLS BOTTOM OF SIGN AT 7'0" ABOVE FINISHED GRADE. THE POST EXTENDS TO WITHIN 2" OF THE TOP OF THE SIGN PANEL. INSTALLATION SHALL BE PLUMB, LEVEL AND STRAIGHT.
6. MOUNTING U-2 PROVIDES TWO POLE SUPPORT SIMILAR TO MOUNTING U-1E. ADDITIONALLY, U-2 REQUIRES CROSS BRACING OF STRUCTURAL ANGLE ON THE BACK OF THE SIGN FACE.
7. TOP OF THE U-2 MOUNTED SIGN INSTALLS 8'0" ABOVE GRADE. INSTALLATION SHALL BE PLUMB, LEVEL AND STRAIGHT.
8. THE INSTALLATION METHODS AND DETAILS FOR EACH LOCATION SHALL BE ILLUSTRATED IN THE SUBMITTED SHOP DRAWINGS. FINAL LOCATIONS WILL BE APPROVED ON SITE BY THE TENANT OR TENANT REPRESENTATIVE.

SUBMITTALS:
1. THE FOLLOWING SHALL BE SUBMITTED FOR APPROVAL PRIOR TO FABRICATION: THREE (3) SETS OF SHOP DRAWINGS AND THREE (3) 6" X 6" VINYL SAMPLES OF EACH SIGN FACE COLOR. ELECTRONIC SHOP DRAWINGS ARE ACCEPTABLE.
2. SEE GENERAL CONSTRUCTION AND INSTALLATION SPECIFICATIONS FOR ADDITIONAL SUBMITTALS.

1 SITE SIGN MOUNTING DETAILS
1/4" = 1'-0"

AS-26
36" X 36"
TENANT SIGNAGE - MUSTER AREA REPLACE "#" WITH CORRESPONDING AREA NUMBER; SEE PLAN. POLE MOUNT AT 15'-0" A.F.G. IN CAR PARKING. POLE MOUNT AT 20'-0" A.F.G. IN TRAILER YARD (MEASURED AT BOTTOM OF SIGN) WHITE GRAPHICS ON GREEN BACKGROUND.

2 WAYFINDING SIGN
1/2" = 1'-0"

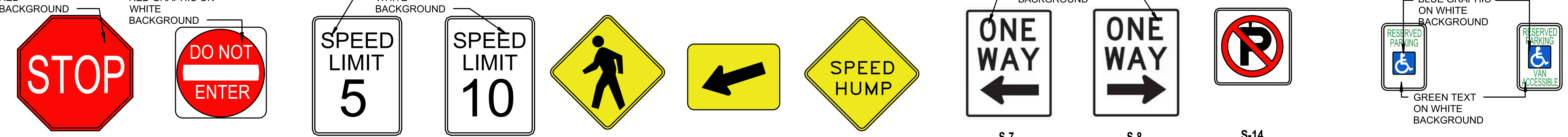

S-1
36" X 36" DOT STANDARD OCTAGONAL "STOP" SIGN (R1-1). USE AT INTERSECTIONS IN PARKING LOT AND DRIVE AISLES. POST AND PANEL MOUNT.

S-2
30" X 30" DOT STANDARD "DO NOT ENTER" SIGN. USE TO PROHIBIT TRAVEL IN THE WRONG DIRECTION. TYPICAL AT ONE-WAY ROADS. POST AND PANEL MOUNT.

S-3
30" X 36" DOT STANDARD "SPEED LIMIT 5 MPH" SIGN. USE TO CONTROL SPEED ALONG DRIVE AISLES WITHOUT ADJACENT PARKING SPOTS. POST AND PANEL MOUNT.

S-4
30" X 36" DOT STANDARD "SPEED LIMIT 10 MPH" SIGN. USE TO CONTROL SPEED ALONG DRIVE AISLES WITHOUT ADJACENT PARKING SPOTS. POST AND PANEL MOUNT.

S-5
36" X 36" DOT STANDARD "PEDESTRIAN" SIGN (W11-2). USE AT CROSSWALKS IN PARKING LOT AND DRIVE AISLES. POST AND PANEL MOUNT.

S-5A
12" X 24" DOT STANDARD "DOWNWARD DIAGONAL ARROW" SIGN (W16-7P). USE AT CROSSWALKS IN PARKING LOT AND DRIVE AISLES. POST AND PANEL MOUNT.

S-6
36" X 36" DOT STANDARD "SPEED BUMP" SIGN (W17-1). USE AT SPEED HUMPS IN PARKING LOT AND DRIVE AISLES. POST AND PANEL MOUNT.

S-7
30" X 36" DOT STANDARD VERTICALLY ORIENTED "ONE WAY" LEFT ARROW SIGN. USE ALONG ONE WAY DRIVE AISLES. POST AND PANEL MOUNT.

S-8
30" X 36" DOT STANDARD VERTICALLY ORIENTED "ONE WAY" RIGHT ARROW SIGN. USE ALONG ONE WAY DRIVE AISLES. POST AND PANEL MOUNT.

S-14
24" X 24" DOT STANDARD "NO PARKING" SIGN. USE TO PROHIBIT PARKING. POST AND PANEL MOUNT.

S-15
12" X 18" DOT STANDARD VERTICALLY ORIENTED ACCESSIBLE "PARKING ONLY" SIGN. USE TO DEMARCATE ACCESSIBLE PARKING SPACES. ONE SIGN PER SPACE OR AS REQUIRED BY LOCAL AUTHORITY. POST AND PANEL MOUNT.

S-16
12" X 18" DOT STANDARD VERTICALLY ORIENTED "VAN ACCESSIBLE" PARKING SIGN. USE TO DEMARCATE VAN ACCESSIBLE PARKING SPACES. ONE SIGN PER SPACE OR AS REQUIRED BY LOCAL AUTHORITY. POST AND PANEL MOUNT.

3 DIRECTIONAL SIGNS
1/2" = 1'-0"

CUSTOM SIGNAGE COLORS

	Gloss Vinyl	Reflective Vinyl	Paint
C1 White	Scotchcal White 230-20	Scotchcal 280i White 280-10	Gloss White Two part catalyst hardened acrylic enamel
C2 Black	Scotchcal Black 230-22 (Pantone BlackC)	Scotchcal Black 280-85	
C3 Yellow	Oracal OPAQUE 020 GOLDEN YELLOW TRANSLUCENT 015 YELLOW ORANGE (Color to match Amazon branding guidelines. Amazon orange= Pantone 137 U, Pantone 1375 C)		
C4 Gray	Scotchcal Medium Gray 230-31		Satin Finish Two part catalyst hardened acrylic enamel
C5 Red	Scotchcal Red 230-33 (Pantone 485C2 tenant tenant	Scotchcal Red	
C6 Blue	Scotchcal Cobalt Blue (Pantone 288C)	Scotchcal Blue 230-75	
C7 Blue	Scotchcal Tenant Blue (Pantone 2995C)(RAL 5012)		

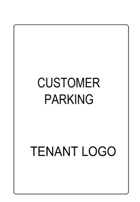

AS-31
12" X 18"
TENANT SIGNAGE - CUSTOMER PARKING LOCATE OUTSIDE BUILDING AT CUSTOMER PARKING SPACES. BLACK TEXT (ARIAL NARROW) ON WHITE BACKGROUND

4 TENANT PARKING SIGN
3/4" = 1'-0"

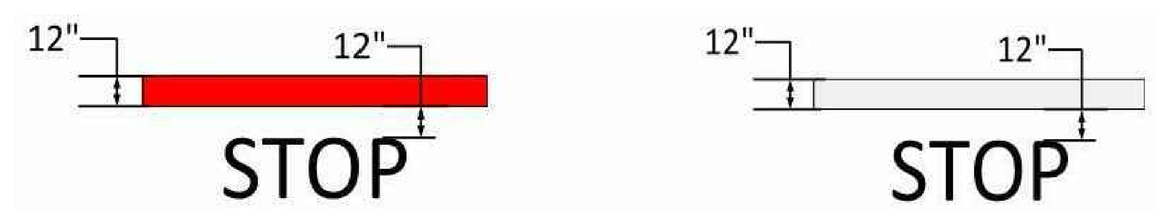

RED STOP LINE
USED ONLY AT GUARDHOUSE FOR VEHICLE ENTRY LANES 1 AND 2, AND VEHICLE EXIT LANES 1 AND 2. RED LINE AND 4' TALL PAINTED WHITE GRAPHIC TEXT "STOP"

WHITE STOP LINE
USED WHEN LEAVING TENANT PROPERTY AT ANY INTERSECTION, WHEN MAKING A TURN LESS THAN 90 DEGREES, WHEN CROSSING DIRECTIONAL TRAFFIC, AND WHEN AN OVERFLOW SECONDARY TRAILER PARKING AREA INTERSECTS WITH THE TRAILER YARD. WHITE LINE AND 4' TALL PAINTED WHITE GRAPHIC TEXT "STOP"

VEHICLE STOP LINE
12" WIDE VEHICLE STOP LINE USED TO DESIGNATE WHEN A VEHICLE MUST COME TO A FULL COMPLETE STOP BEFORE MOVING FORWARD AND/OR MAKING A TURN.

5 VEHICLE STOP LINE
1" = 1'-0"

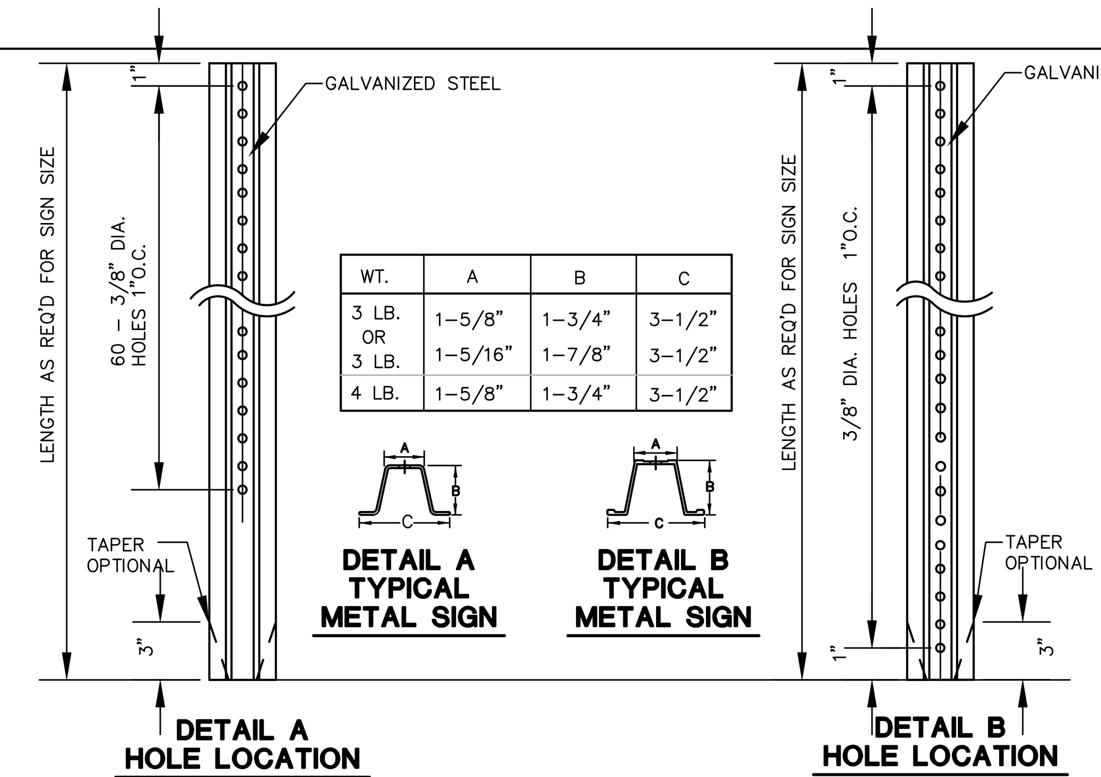

WT.	A	B	C
3 LB. OR 3 LB.	1–5/8" 1–5/16"	1–3/4" 1–7/8"	3–1/2" 3–1/2"
4 LB.	1–5/8"	1–3/4"	3–1/2"

NOTES:
1.STEEL FOR POSTS SHALL CONFORM TO THE MECHANICAL REQUIREMENTS OF ASTM A 499–81 GRADE 60 AND TO THE CHEMICAL REQUIREMENTS OF ASTM AI–76 CARBON STEEL TEE RAIL HAVING NOMINAL WEIGHT OF "30 LBS OR GREATER PER LINEAR FOOT.

2.AFTER FABRICATION ALL STEEL POSTS SHALL BE GALVANIZED TO MEET THE REQUIREMENTS OF ASTM A–123.

3.SIGN MOUNTING HEIGHT TO BE PER MUTCD REQUIREMENTS.

4.ALL SIGN POSTS SHALL HAVE "BREAK AWAY" FEATURES THAT MEET AASHTO REQUIREMENTS CONTAINED IN "STANDARD SPECIFICATIONS FOR STRUCTURAL SUPPORTS FOR HIGHWAY SIGNS, LUMINAIRES AND TRAFFIC SIGNALS". THE "BREAK AWAY" FEATURES SHALL BE STRUCTURALLY ADEQUATE TO CARRY THE SIGN SHOWN ON THE PLANS AT 60 MPH WIND LOADINGS. INSTALLATIONS SHALL BE IN ACCORDANCE WITH MANUFACTURERS RECOMMENDATIONS.

6 TYPICAL SIGN POST
NTS

SITE SIGNAGE COLOR GENERAL NOTES

ALL SIGNS INDICATED "DOT" SHALL CONFORM TO COLOR AND REFLECTANCE SPECIFICATIONS OF THE MUTCD

MUTCD (MANUAL ON UNIFORM TRAFFIC CONTROL DEVICES)
HTTP://MUTCD.FHWA.DOT.GOV/KNO-COLORSPEC.HTM

MUTCD COLOR SPECIFICATIONS
COLOR SPECIFICATIONS (23 CFR 655)
THE COLOR SPECIFICATIONS ARE USED TO DETERMINE THE COLOR OF SIGN SHEETING AND PAVEMENT MARKING MATERIALS FOR DESIGN PURPOSES. MOST OF THE COLOR SPECIFICATIONS WERE LAST REVISED BY THE FINAL RULE; AMENDMENT DATED NOVEMBER 21, 2002. HOWEVER, SOME COLOR SPECIFICATIONS WERE REVISED AND SPECIFICATIONS FOR SOME NEW COLORS WERE ADDED BY THE FINAL RULE DATED DECEMBER 16, 2009. VISIT THE ABOVE LINK FOR MORE INFO.

PANTONE MATCHING COLORS
THE FOLLOWING ARE PANTONE SPECIFICATIONS, FOR PRINTING PURPOSES. THEY PROVIDE A GUIDE FOR SELECTING APPROPRIATE LINK COLORS TO CLOSELY MATCH THE STANDARD COLORS OF TRAFFIC CONTROL SIGNS. NOTE: THERE ARE NO PANTONES AVAILABLE FOR FLUORESCENT COLOR SIGNS.

PANTONE SPECIFICATIONS FOR PRINTING
BROWN - 469, RED - 187, YELLOW - 116, PURPLE - 259, GREEN - 342, BLUE - 294, ORANGE - 152

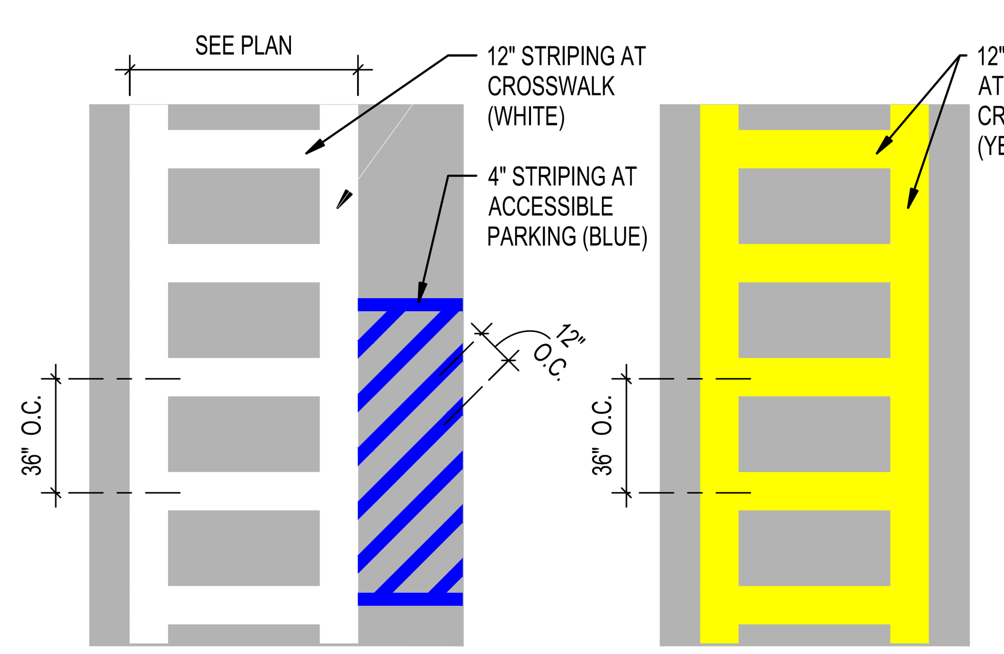

PG-11
WHITE 12" STRIPING OUTLINE AND HATCH FILL AT 36" O.C. PAVEMENT GRAPHICS -PEDESTRIAN CROSSWALK. USE TO INDICATE PEDESTRIAN CROSSING. SEE PLAN FOR WIDTH OF CROSSWALK (BLACK INDICATES ASPHALT)

PG-12
YELLOW 12" STRIPING OUTLINE AND HATCH FILL AT 36" O.C. PAVEMENT GRAPHICS - DRIVER ENTRANCE. USE TO DIRECT DRIVER ENTRANCE IN DOCK FIELD. POSITION IN TRUCK COURT TO CORRESPOND WITH THE LOCATION OF THE TRUCKERS LOUNGE AND TRUCKERS ENTRY POINTS. SEE PLAN FOR WIDTH OF CROSSWALK (BLACK INDICATES ASPHALT)

7 CROSSWALK PAVEMENT MARKINGS
NTS

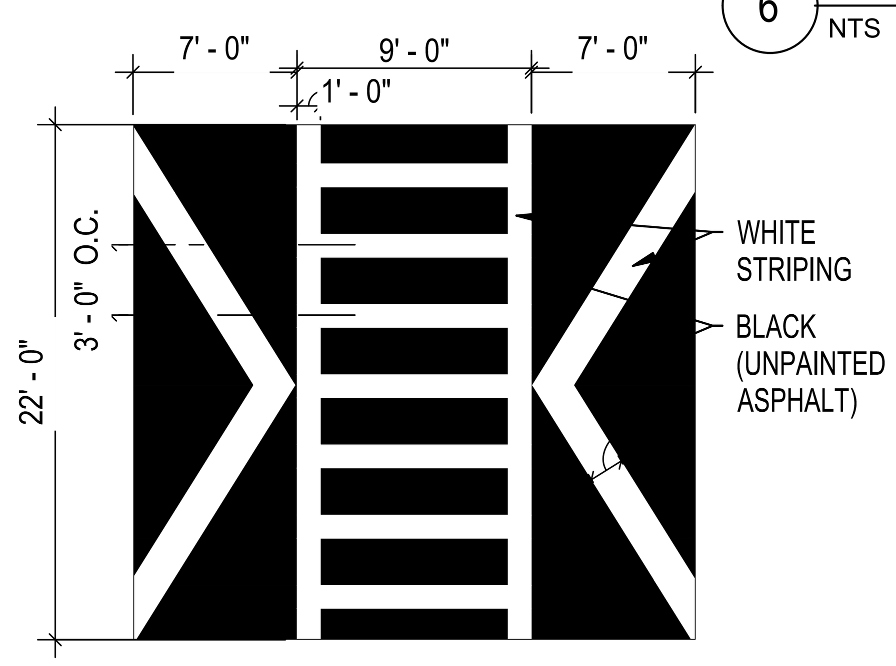

PG-20
24'-0" X 22'-0"
WHITE PAVEMENT GRAPHICS - PEDESTRIAN TABLE. USE AT CROSSWALKS AT HIGH TRAFFIC AREAS PER SITE (EX. MAIN ENTRANCE) WHITE STRIPING ON RAISED ASPHALT TABLE.

8 RAISED PEDESTRIAN TABLE WITH CROSSWALK
NTS

COORDINATE WITH EQUIPMENT MANUFACTURER

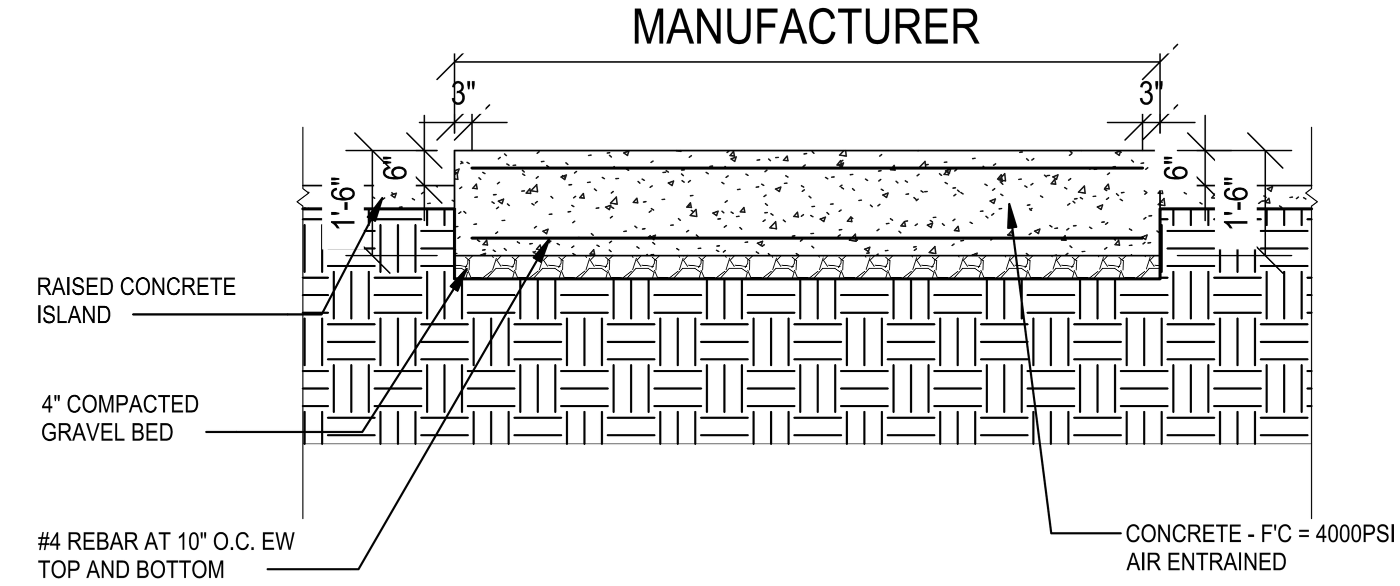

9 STANDARD CONCRETE PAD FOR TRANSFORMER
NTS

FOR PERMITTING PURPOSES ONLY
NOT RELEASED FOR CONSTRUCTION

Architecture
Engineering
Environmental
Land Surveying
BL Companies
355 Research Parkway
Meriden, CT 06450
(203) 630-1406
(203) 630-2615 Fax

COMMONWEALTH OF MASSACHUSETTS ROBERT M. BOLES CIVIL No. 54612 REGISTERED PROFESSIONAL ENGINEER

PROPOSED DEVELOPMENT
100 INDUSTRIAL PARK ROAD
HINGHAM, MASSACHUSETTS

REVISIONS

No.	Date	Desc.
2.	06/01/2020	Revised per Staff and Commission Comments
3.	06/23/2020	Revised per Staff and Commission Comments

Designed	P.G.M.
Drawn	P.G.M.
Reviewed	
Scale	NONE
Project No.	1901517
Date	03/06/2020
CAD File: DN190151701	

Title
DETAIL SHEET

Sheet No.
DN-1

Xref (s): : BD190151701

7/13/2020, AKLOSE, G:\JOBS19\14\1901517\DWG\DN190151701.DWG,DN-1 24 X 36 N.T.S..

© 2020 BL COMPANIES, INC. THESE DRAWINGS SHALL NOT BE UTILIZED BY ANY PERSON, FIRM OR CORPORATION WITHOUT THE SPECIFIC WRITTEN PERMISSION OF BL COMPANIES.

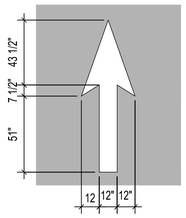

PG-5
8'-0" X 10'-0"
WHITE PAVEMENT GRAPHICS
-STRAIGHT ARROW. USE TO DIRECT TRAFFIC AT ONE-WAY DRIVE AISLES
(BLACK INDICATES ASPHALT)

1 PAVEMENT ARROWS
1/4" = 1'-0"

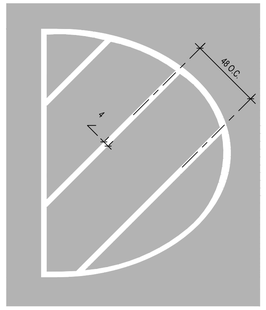

PG-10
4" STRIPING OUTLINE AND FILL AT 45 DEGREES. PAVEMENT GRAPHICS - TRAFFIC ISLAND. USE TO PROHIBIT VEHICLE TRAVEL AND PARKING. YELLOW AT NO TRAFFIC, BLUE AT ACCESSIBLE PARKING SPACES, WHITE AT VENDOR PARKING (BLACK INDICATES ASPHALT). INCLUDE AT EMERGENCY EXITS INTO THE PARKING LOT AT ALL PARKING SPACES THAT IMPEDE DIRECT ACCESS TO THE THOROUGHFARE.

2 PAVEMENT STRIPING
1/4" = 1'-0"

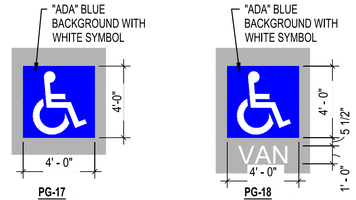

PG-17
4'-0" X 4'-0"
PAVEMENT GRAPHICS - STANDARD ACCESSIBLE PARKING SPACE. USE AT ALL ACCESSIBLE PARKING SPACES. WHITE SYMBOL WITH BLUE BACKGROUND (BLACK INDICATES ASPHALT).

PG-18
4'-0" X 5'-5 1/2"
PAVEMENT GRAPHICS - VAN ACCESSIBLE PARKING SPACE. USE AT ALL VAN ACCESSIBLE PARKING SPACES. WHITE SYMBOL WITH BLUE BACKGROUND, AND WHITE TEXT (BLACK INDICATES ASPHALT).

3 PAVEMENT ADA GRAPHICS
1/4" = 1'-0"

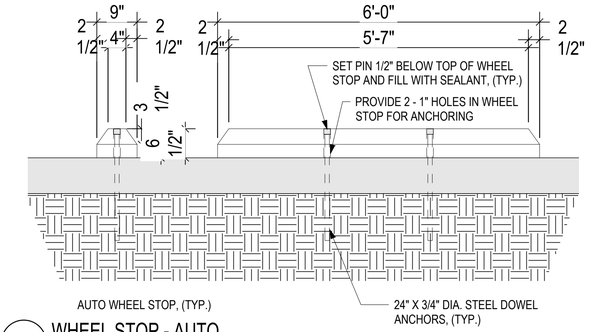

4 WHEEL STOP - AUTO
3/4" = 1'-0"

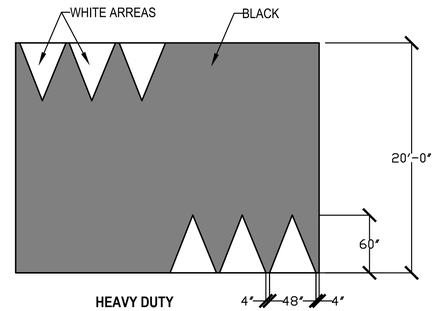

HEAVY DUTY RUBBER SPEED HUMP

PG-15

20'-0" WIDE
PAVEMENT GRAPHICS - LARGE SPEED BUMP. USE TO CONTROL SPEED AT OUTLYING DRIVE AREAS. WHITE THERMAL APPLIED WHITE ARROWS. ASPHALT SPEED HUMPS SHALL BE USED IN COLDER CLIMATES WHERE SNOW REMOVAL EQUIPMENT IS INTENDED TO BE USED. RUBBER SPEED HUMPS MAY BE USED IN WARMER CLIMATES OR REGIONS WHERE CONCRETE PAVEMENT IS PREVALENT.

5 SPEED BUMP - BITUMINOUS CONCRETE
N.T.S.

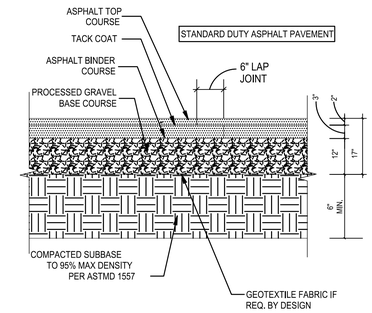

FOR INFORMATION ONLY. FINAL DESIGN BY GEOTECHNICAL ENGINEER AFTER SITE DATA ANALYSIS. PAVEMENT TO MEET LOCAL AND STATE AHJ AND DESIGN. MATERIAL TO BE PER LOCAL DOT PAVEMENT MIX DESIGN FOR WEARING AND BINDER COURSES INCLUDING BASE MATERIALS

11 STANDARD DUTY ASPHALT PAVEMENT
N.T.S.

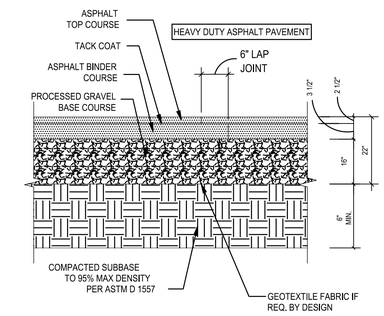

FOR INFORMATION ONLY. FINAL DESIGN BY GEOTECHNICAL ENGINEER AFTER SITE DATA ANALYSIS. PAVEMENT TO MEET LOCAL AND STATE AHJ AND DESIGN. MATERIAL TO BE PER LOCAL DOT PAVEMENT MIX DESIGN FOR WEARING AND BINDER COURSES INCLUDING BASE MATERIALS

12 HEAVY DUTY ASPHALT PAVEMENT
N.T.S.

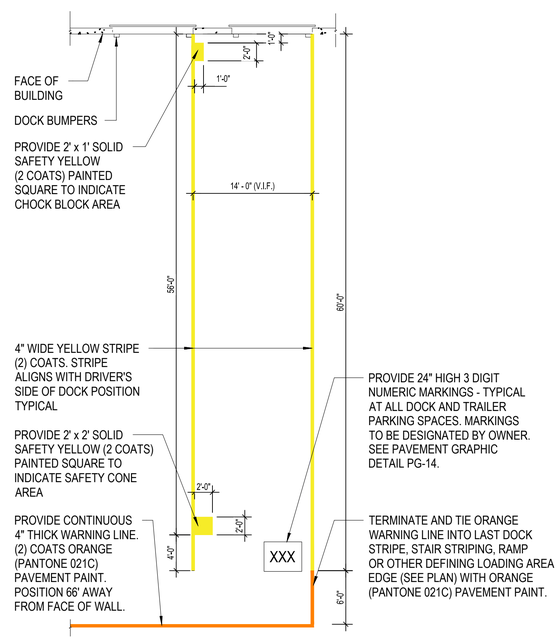

6 TYPICAL TRAILER PARKING AT DOCK
1/8" = 1'-0"

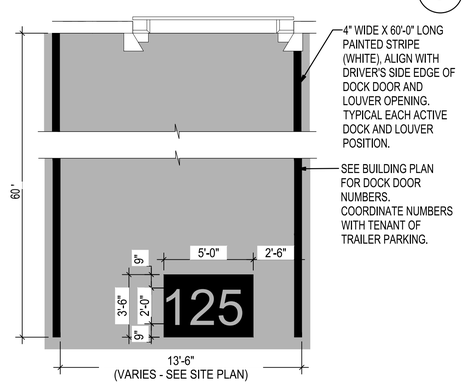

PG-14
WHITE 5'-0" X 3'-6" (24" TALL LETTERING) PAVEMENT GRAPHICS - TRAILER SPACE NUMBERING. USE TO LABEL TRAILER SPACES. TYPICAL ALL TRUCK DOCK SPACES. (BLACK INDICATES ASPHALT). SEE PLANS FOR DOCK DOOR NUMBERS. COORDINATE NUMBERS WITH TENANT OF TRAILER PARKING.

7 DOCK DOOR SLIP MARKINGS
N.T.S.

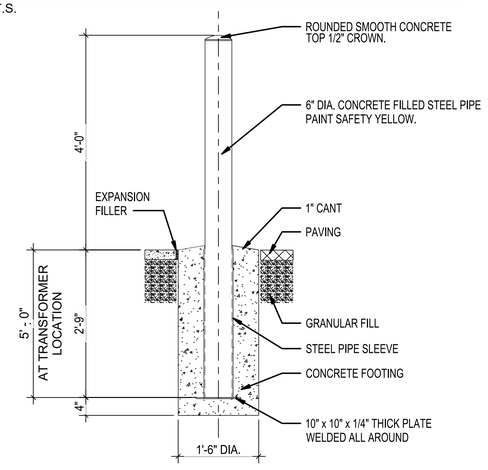

10 TYPICAL SITE PROTECTIVE BOLLARD DETAIL
3/4" = 1'-0"

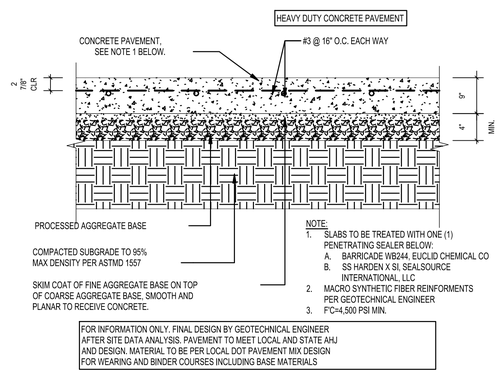

NOTE:
1. SLABS TO BE TREATED WITH ONE (1) PENETRATING SEALER BELOW:
   A. BARRICADE WB244, EUCLID CHEMICAL CO
   B. SS HARDEN X SI, SEALSOURCE INTERNATIONAL, LLC
2. MACRO SYNTHETIC FIBER REINFORMENTS PER GEOTECHNICAL ENGINEER
3. F'C=4,500 PSI MIN.

FOR INFORMATION ONLY. FINAL DESIGN BY GEOTECHNICAL ENGINEER AFTER SITE DATA ANALYSIS. PAVEMENT TO MEET LOCAL AND STATE AHJ AND DESIGN. MATERIAL TO BE PER LOCAL DOT PAVEMENT MIX DESIGN FOR WEARING AND BINDER COURSES INCLUDING BASE MATERIALS

13 HEAVY DUTY CONCRETE PAVEMENT
N.T.S.

PAVEMENT GRAPHIC NOTES:

1. TWO COAT APPLICATION REQUIRED FOR ALL PAVEMENT GRAPHICS.
2. REFER TO CIVIL FOR PAINTED GRAPHIC ARROWS AND ADDITIONAL PAVEMENT GRAPHIC CRITERIA.

PAVEMENT PAINT

TA1/PP1	WHITE	
TA2/PP2	RED	(PANTONE 485C)
TA3/PP3	BLUE	(PANTONE 294)
TA4/PP4	GREEN	(PANTONE 342)
TA5/PP5	YELLOW	(PANTONE 116)

NOTE: TWO COAT APPLICATION REQUIRED FOR ALL PAVEMENT GRAPHICS.

FOR PERMITTING PURPOSES ONLY
NOT RELEASED FOR CONSTRUCTION

© 2020 BL COMPANIES, INC. THESE DRAWINGS SHALL NOT BE UTILIZED BY ANY PERSON, FIRM OR CORPORATION WITHOUT THE SPECIFIC WRITTEN PERMISSION OF BL COMPANIES.

7/13/2020, AKLOSE, G:\JOBS\19\1901517\DWG\DN190151701.DWG,DN-2, 24 X 36 H.T.S.

Architecture
Engineering
Environmental
Land Surveying
BL Companies
355 Research Parkway
Meriden, CT 06450
(203) 630-1406
(203) 630-2615 Fax

COMMONWEALTH OF MASSACHUSETTS
ROBERT M. BOLES
CIVIL
No. 54612
REGISTERED PROFESSIONAL ENGINEER

PROPOSED DEVELOPMENT
100 INDUSTRIAL PARK ROAD
HINGHAM, MASSACHUSETTS

REVISIONS

No.	Date	Desc.
1.	05/27/2020	Revised per Staff and Commission Comments
2.	06/01/2020	Revised per Staff and Commission Comments

Designed	P.G.M.
Drawn	P.G.M.
Reviewed	
Scale	NONE
Project No.	1901517
Date	03/06/2020
CAD File: DN190151701	

Title
DETAIL SHEET

Sheet No.
DN-2

Xref (s): BD190151701

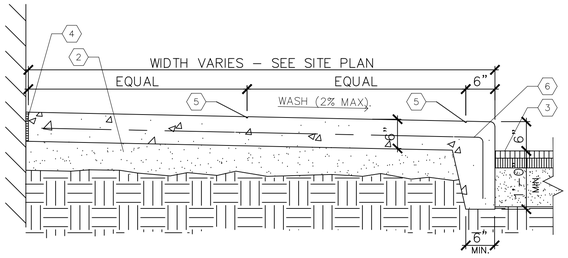

KEYED NOTES

1. N/A
2. 6" COMPACTED MHD M2.01.07 DENSE GRADED CRUSHED STONE.
3. PAVEMENT.
4. COMPRESSIBLE FILLER (3/4" MAXIMUM). CUT BACK AND PROVIDE SEALANT, TYPICAL, AT ALL JOINTS WITH FILLER.
5. 1/4" TOOLED JOINT
6. 6" X 6" W2.1X W2.1 W.W.F.

NOTE: EXPANSION JOINT 20' O.C. MAXIMUM. 1/4" TOOL JOINT 4' O.C. OR AS DIRECTED. CONCRETE TO BE 4000 P.S.I.

MONOLITHIC CONCRETE CURB AND SIDEWALK DETAIL (AT BUILDING)

N.T.S. WAG

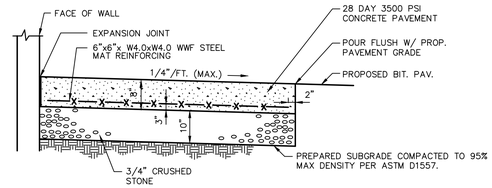

SECTION VIEW

CONCRETE PAD DETAIL

N.T.S. BLPC-002

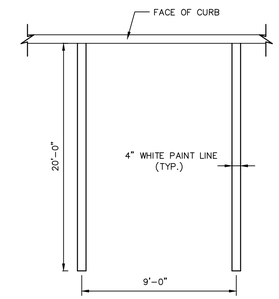

NOTE:
1. PROVIDE 2 COATS OF PAINT ON ALL SURFACES.
2. SEE PLAN FOR ACTUAL SPACE LOCATION AND DIMENSIONS.

TYPICAL PARKING SPACE DETAIL

N.T.S.

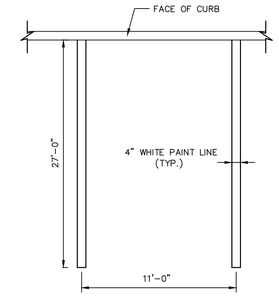

NOTE:
1. PROVIDE 2 COATS OF PAINT ON ALL SURFACES.
2. SEE PLAN FOR ACTUAL SPACE LOCATION AND DIMENSIONS.

TYPICAL VAN PARKING SPACE DETAIL

N.T.S.

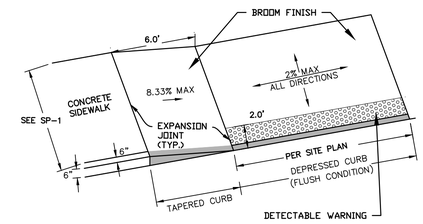

HANDICAP CURB RAMP

N.T.S.

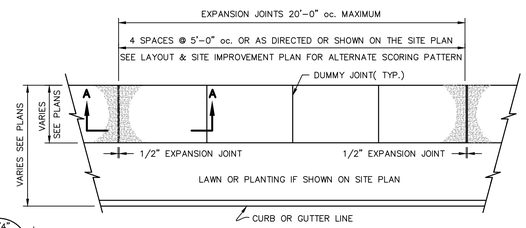

PLAN VIEW

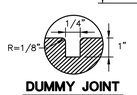

DUMMY JOINT

N.T.S.

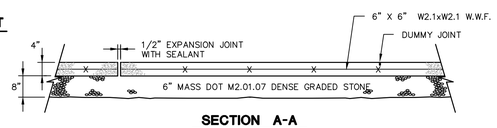

SECTION A-A

CONCRETE SIDEWALK DETAIL

N.T.S. BLSR-001

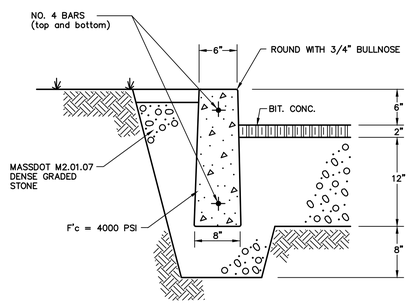

CONCRETE CURB DETAIL

N.T.S. ZPC-010

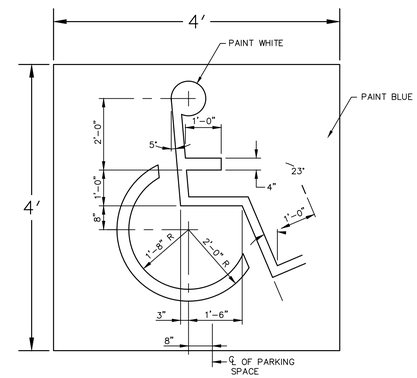

INTERNATIONAL SYMBOL OF ACCESSIBILITY

N.T.S. WG

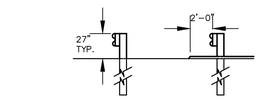

SECTION A-A SECTION B-B

HEIGHT WITH CURBING

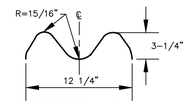

SECTION C-C

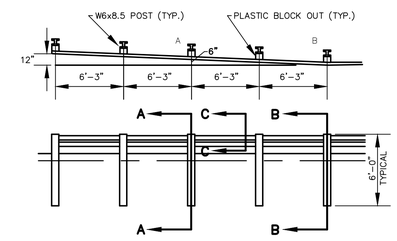

METAL BEAM GUIDE RAIL

N.T.S.

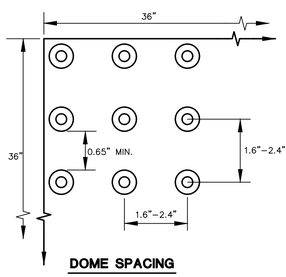

DOME SPACING

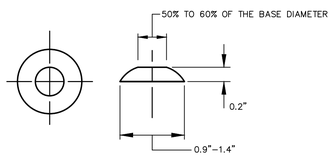

DOME SECTION

SIDEWALK RAMP DETECTABLE WARNING

N.T.S

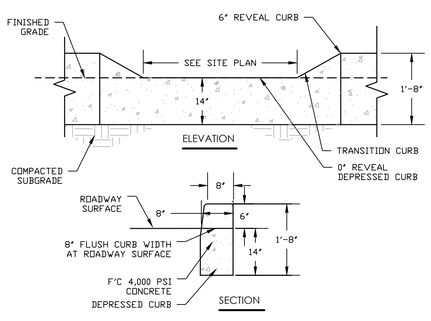

6" REVEAL DEPRESSED/ CONCRETE CURB

N.T.S

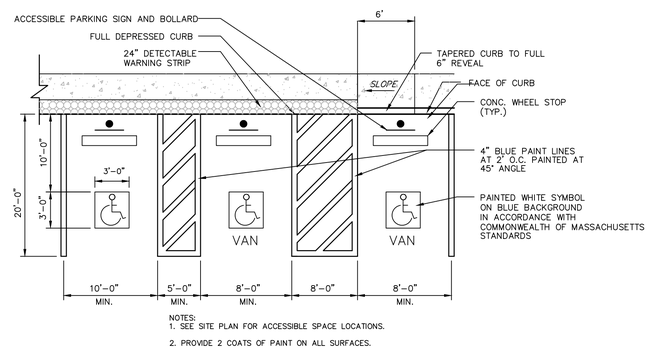

NOTES:
1. SEE SITE PLAN FOR ACCESSIBLE SPACE LOCATIONS.
2. PROVIDE 2 COATS OF PAINT ON ALL SURFACES.

TYPICAL ACCESSIBLE PARKING SPACE AND RAMP DETAIL

N.T.S. BLPC-004

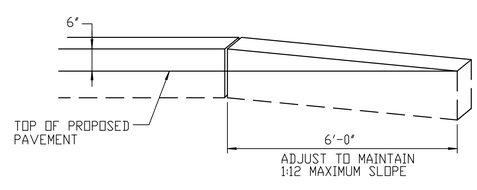

CONCRETE TRANSITION CURB

N.T.S.

MADRAX

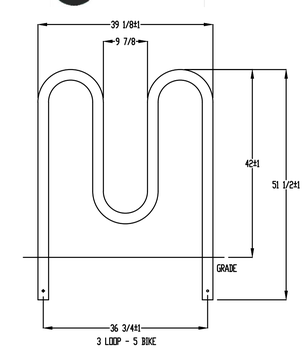

PRODUCT: HV238-5-16(SF)
DESCRIPTION: HEAVY DUTY WINDER BIKE RACK
5 BIKE, SURFACE OR IN GROUND MOUNT
DATE: 10-16-18
ENG: SMC

CONFIDENTIAL DRAWING AND INFORMATION IS NOT TO BE COPIED OR DISCLOSED TO OTHERS WITHOUT THE CONSENT OF GRABER MANUFACTURING, INC. SPECIFICATIONS ARE SUBJECT TO CHANGE WITHOUT NOTICE.

©2018 GRABER MANUFACTURING, INC. ALL PROPRIETARY RIGHTS RESERVED.

MADRAX DIVISION
GRABER MANUFACTURING, INC.
1888 LINEK DRIVE
WAUKESH, WI 53597
P(800) 448-7921, F(608) 849-1888, F(608) 849-1882
WWW.MADRAX.COM, E-MAIL: SALES@MADRAX.COM

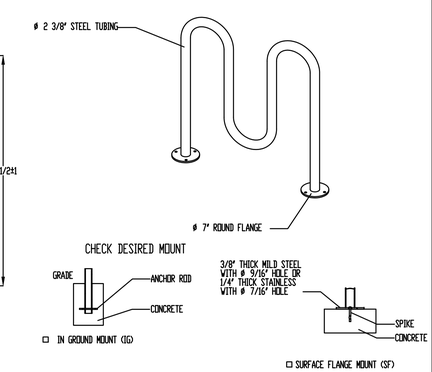

NOTES:
1. INSTALL BIKE RACKS ACCORDING TO MANUFACTURER'S SPECIFICATIONS.
2. CONSULTANT TO SELECT COLOR OTHERS, SEE MANUFACTURER'S SPECIFICATIONS.
3. SEE SITE PLAN FOR LOCATION OR CONSULT OWNER.

FOR PERMITTING PURPOSES ONLY NOT RELEASED FOR CONSTRUCTION

BL Companies
Architecture Engineering Environmental Land Surveying
355 Research Parkway
Meriden, CT 06450
(203) 630-1406
(203) 630-2615 Fax

COMMONWEALTH OF MASSACHUSETTS ROBERT M. BOLES CIVIL No. 54612 REGISTERED PROFESSIONAL ENGINEER

PROPOSED DEVELOPMENT
100 INDUSTRIAL PARK ROAD
HINGHAM, MASSACHUSETTS

REVISIONS

No.	Date	Desc.
1.	05/12/2020	Revised per Staff and Commission Comments

Designed	A.T.K.
Drawn	A.T.K.
Reviewed	
Scale	NONE
Project No.	1901517
Date	03/06/2020

CAD File: DN190151701

Title

DETAIL SHEET

Sheet No.

DN-3

© 2020 BL COMPANIES, INC.. THESE DRAWINGS SHALL NOT BE UTILIZED BY ANY PERSON, FIRM OR CORPORATION WITHOUT THE SPECIFIC WRITTEN PERMISSION OF BL COMPANIES.

7/13/2020, AKLOSE, G:\JOBS\19\1401\19151701\DWG\DN190151701.DWG,DN-3 24 X 36 H.T.S.

Xref (s): BD190151701

TYPICAL WATER MAIN AND SERVICE TRENCH DETAIL

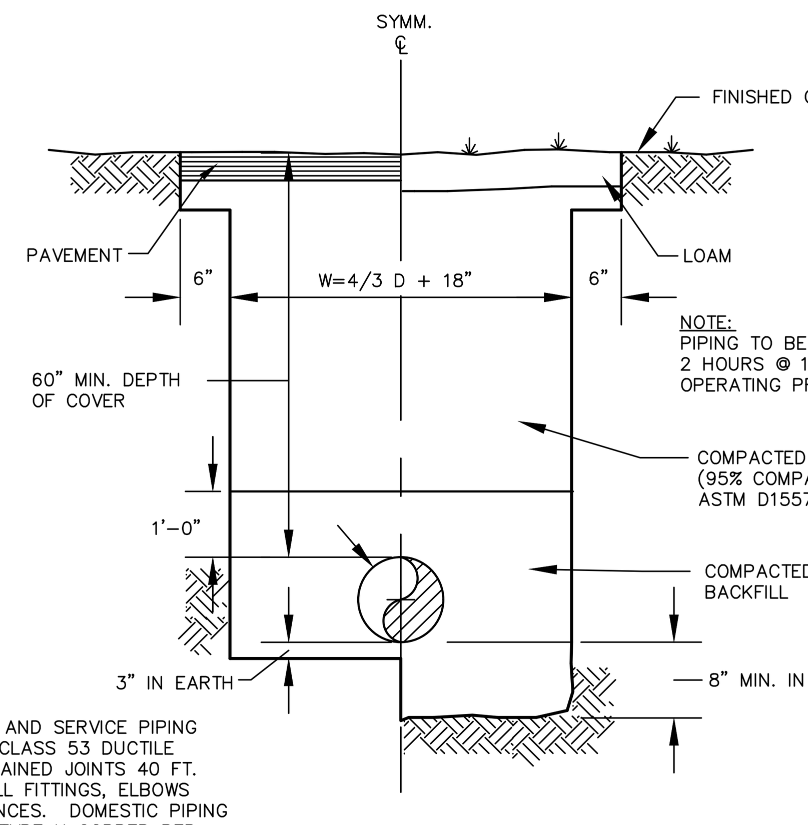

NOTE:
PIPING TO BE HYDROSTATIC TESTED FOR 2 HOURS @ 100 P.S.I. OVER NORMAL OPERATING PRESSURE AFTER INSTALLATION

NOTE:
FIRE LINE PIPING AND SERVICE PIPING > 3" I.D. TO BE CLASS 53 DUCTILE IRON WITH RESTRAINED JOINTS 40 FT. EACH SIDE OF ALL FITTINGS, ELBOWS AND APPURTENANCES. DOMESTIC PIPING < 3" I.D. TO BE TYPE K COPPER PER ASTM B 88.

TYPICAL WATER MAIN AND SERVICE TRENCH DETAIL

N.T.S. BLWD-005

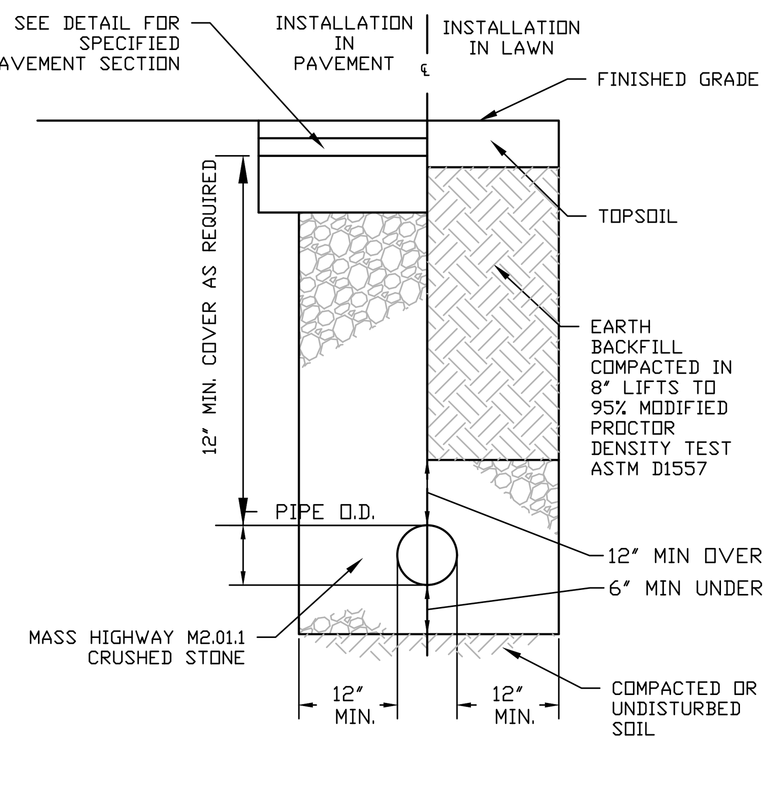

NOTES:

1. ADDITIONAL CONSIDERATIONS MAY BE REQUIRED BY THE SITE & SOIL CONDITIONS OR PIPE MANUFACTURER'S RECOMMENDATIONS.
2. INSTALLATION OF TRENCHES SHALL CONFORM TO ALL SAFETY REQUIREMENTS OF FEDERAL, STATE & LOCAL LAWS, ORDINANCES AND REGULATIONS, INCLUDING BUT NOT LIMITED TO O.S.H.A. REQUIREMENT AND CFR 29 PART 1926.

STORM SEWER TRENCH DETAIL (ON-SITE)

N.T.S

GENERAL NOTES

1. STRIP ALL VEGETATION AND ORGANIC SOIL FROM THE WALL AND GRID ALIGNMENT.
2. BENCH CUT ALL EXCAVATED SLOPES.
3. DO NOT OVER EXCAVATE UNLESS DIRECTED BY SITE SOIL ENGINEER TO REMOVE UNSUITABLE SOIL.
4. SITE SOIL ENGINEER SHALL VERIFY FOUNDATION SOILS AS BEING COMPETENT PER THE DESIGN STANDARDS AND PARAMETERS.
5. LEVELING PAD SHALL CONSIST OF MINIMUM 6" THICK, MINIMUM 2000 PSI CONCRETE, OR MINIMUM 6" OF 3/4" CRUSHED STONE.
6. MINIMUM EMBEDMENT OF WALL BELOW FINISH GRADE SHALL BE 24".
7. FOLLOW APPLICABLE PROVISIONS OF THE MANUFACTURERS INSTALLATION INSTRUCTIONS AND WRITTEN SPECIFICATIONS.
8. WHERE DRAIN PIPE IS USED, PROVIDE OUTLETS AS SHOWN ON WALL ELEVATIONS.
9. COMPACTION TESTS SHALL BE TAKEN AS THE WALL IS INSTALLED. THE MINIMUM NUMBER OF TESTS SHALL BE DETERMINED BY THE SITE SOILS ENGINEER, OR AS INDICATED IN THE SPECIFICATION.
10. COMPACTION SHALL BE 95% OF MAXIMUM DRY DENSITY PER ASTM D1557.
11. GEOGRID SHALL BE PER BLOCK MANUFACTURER'S DESIGN ON SHOP DRAWINGS.
12. PULL GEOGRID TIGHT PRIOR TO BACK FILLING. LENGTH OF GEOGRID SHALL BE MEASURED FROM FRONT OF SEGMENTAL CONCRETE UNITS.
13. PROVIDE LATERAL DRAINAGE SWALES TO DIRECT FLOWS AROUND THE ENDS OF THE WALL.
14. ESTABLISH TURF AS SOON AS THE WALL IS COMPLETED.
15. FINAL WALL ALIGNMENT SHALL BE LOCATED IN THE FIELD.
16. REINFORCED BACK FILL REQUIREMENTS FOR THE SEGMENTAL CONCRETE RETAINING WALL SHALL CONFORM TO THE FOLLOWING SPECIFICATIONS:

SIEVE SIZE	PERCENT PASSING REINFORCED BACK FILL
5 INCH	100
3-1/2 INCH	90-100
1-1/2 INCH	55-95
1/4 INCH	25-60
NO. 10	15-45
NO. 40	5-25
NO. 100	0-10
NO. 200	0-5

PLASTICITY INDEX (PI) LESS THAN OR EQUAL TO 10 AND A LIQUID LIMIT LESS THAN OR EQUAL TO 40. REINFORCED BACK FILL SHALL BE PLACED AND COMPACTED IN LIFTS NOT EXCEEDING 10 INCHES. REINFORCED BACK FILL SHALL BE COMPACTED TO 95 PERCENT OF THE MAXIMUM DENSITY AS DETERMINED BY ASTM D1557. THE MOISTURE CONTENT OF THE BACK FILL MATERIAL PRIOR TO AND DURING COMPACTION SHALL BE WITHIN 2 PERCENTAGE POINTS OF DRY OPTIMUM.

IF CONDITIONS ARE DIFFERENT THAN THOSE STATED IN THESE DRAWINGS AND SPECIFICATIONS, THE CONTRACTOR MUST CONTACT THE ENGINEER PRIOR TO PROCEEDING WITH THE CONSTRUCTION OF THE WALL.

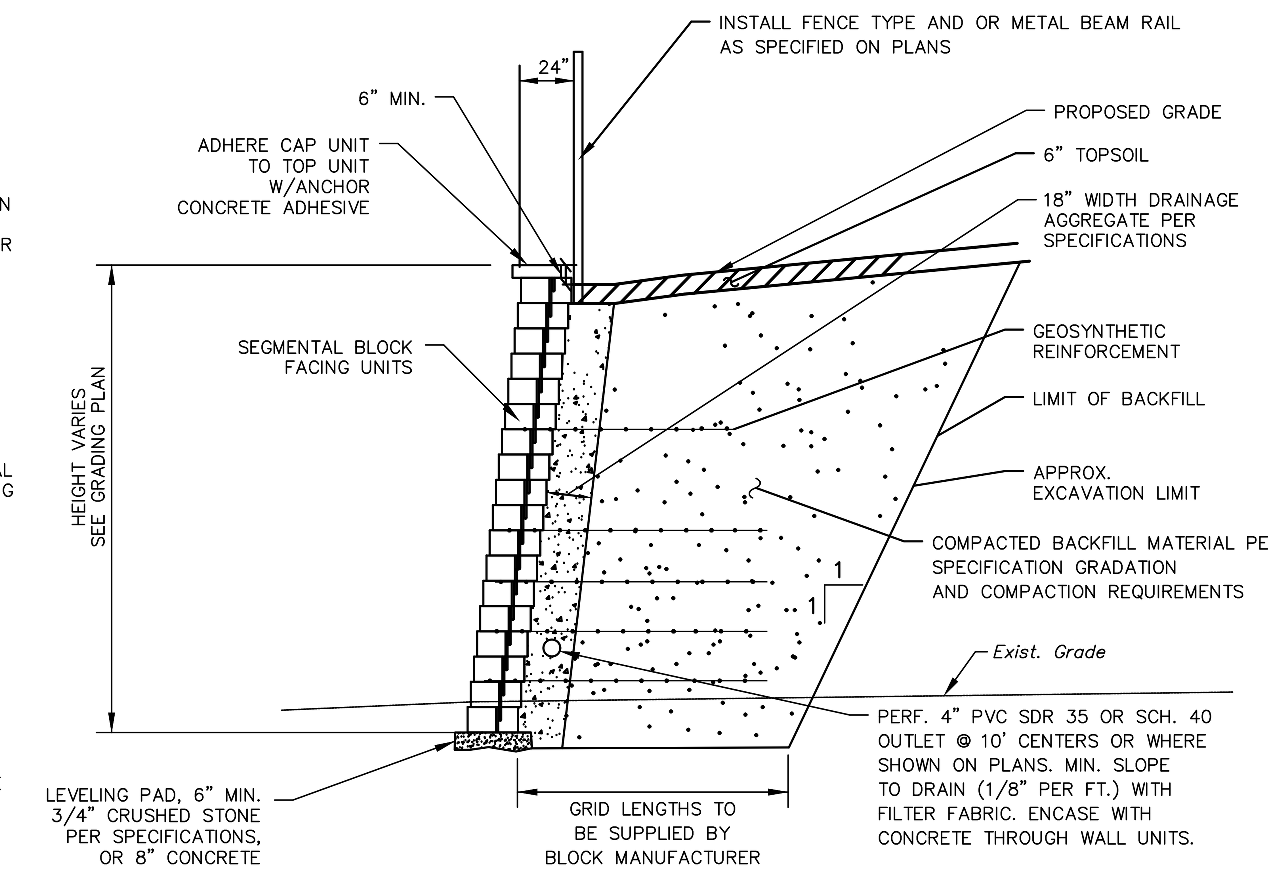

NOTE:
1. BLOCK MANUFACTURER TO SUBMIT SHOP DRAWINGS AND CALCULATIONS FOR RETAINING WALLS PRIOR TO CONSTRUCTION BY MASSACHUSETTS LICENSED PROFESSIONAL ENGINEER.
2. WALL DRAIN TO BE DISCHARGED PER MANUFACTURER'S RECOMMENDATIONS.

TYPICAL RETAINING WALL SECTION

N.T.S.

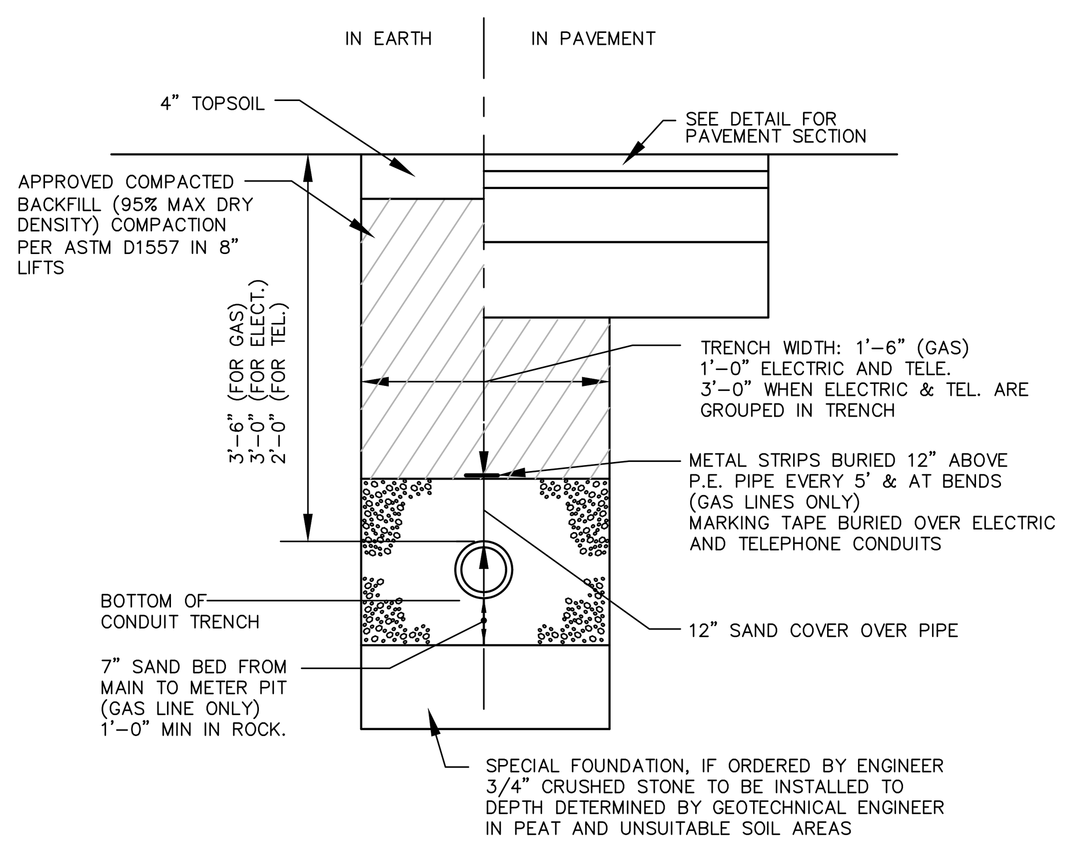

ELECTRICAL, TELECOMMUNICATION AND GAS TRENCH DETAIL

N.T.S. BLUD-001

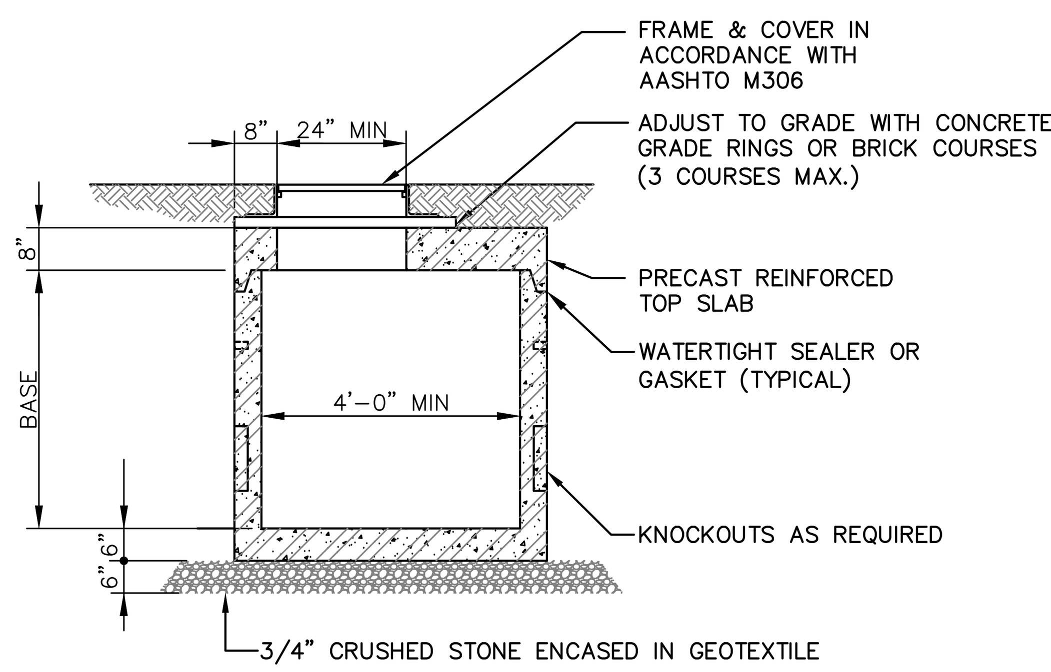

SHALLOW STORM DRAIN MANHOLE

N.T.S. BLUD-001

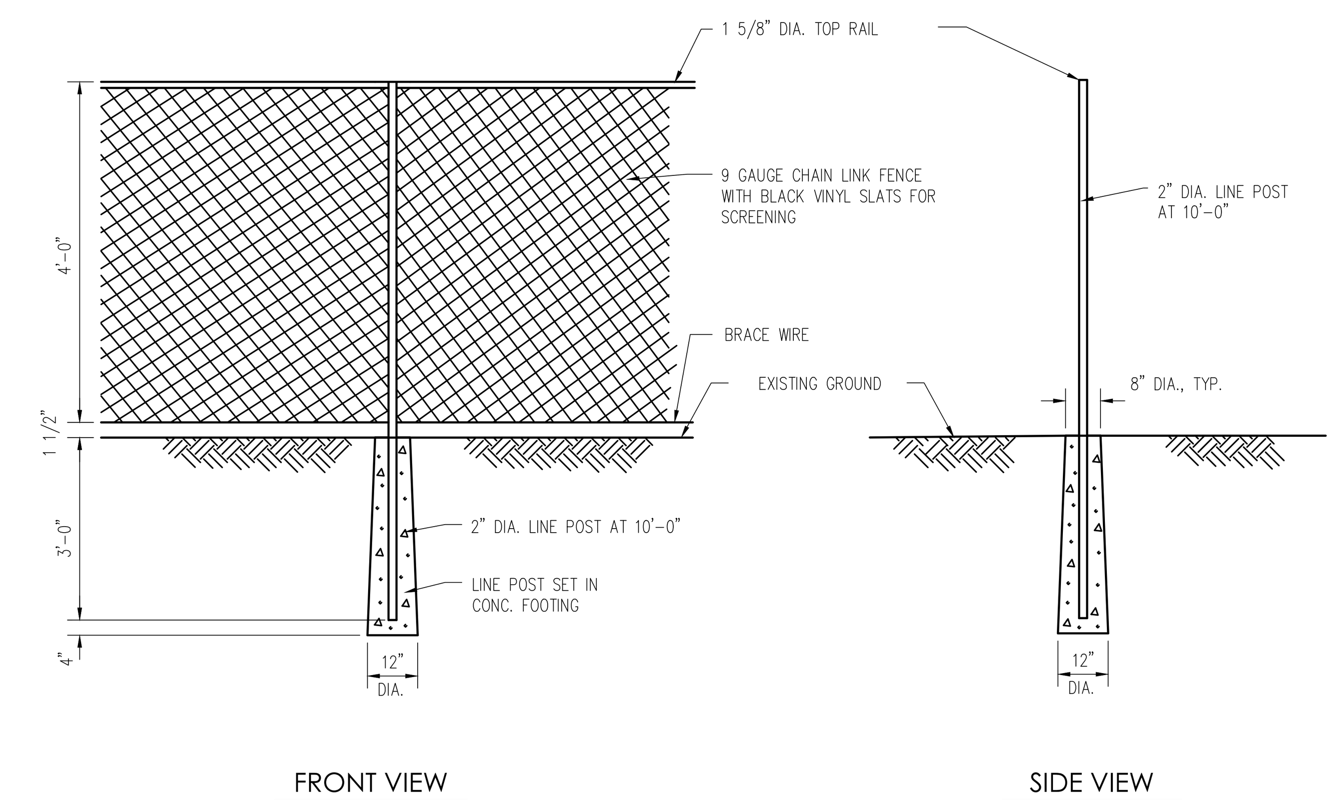

CHAIN LINK FENCE DETAIL

N.T.S.

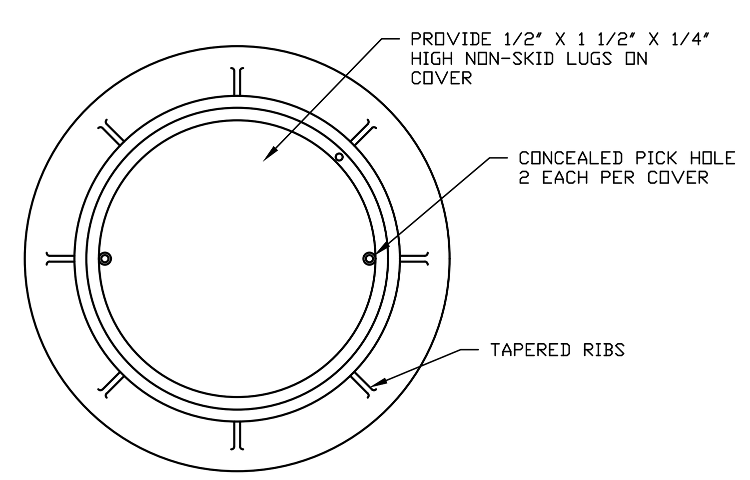

PLAN VIEW

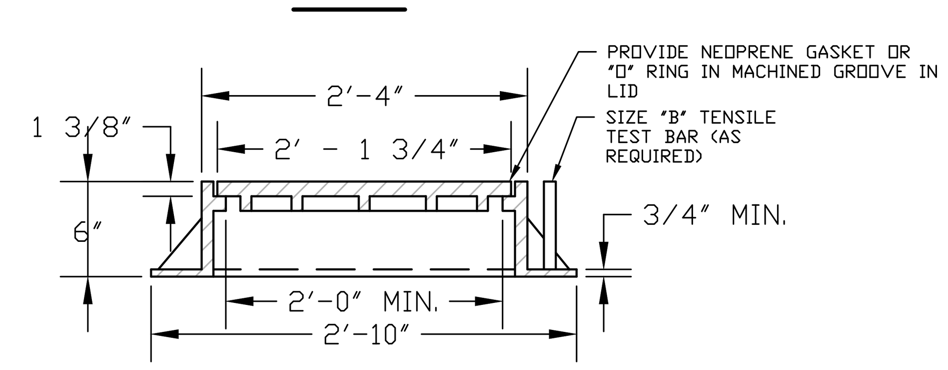

SECTION VIEW

STANDARD MANHOLE FRAME AND COVER

N.T.S

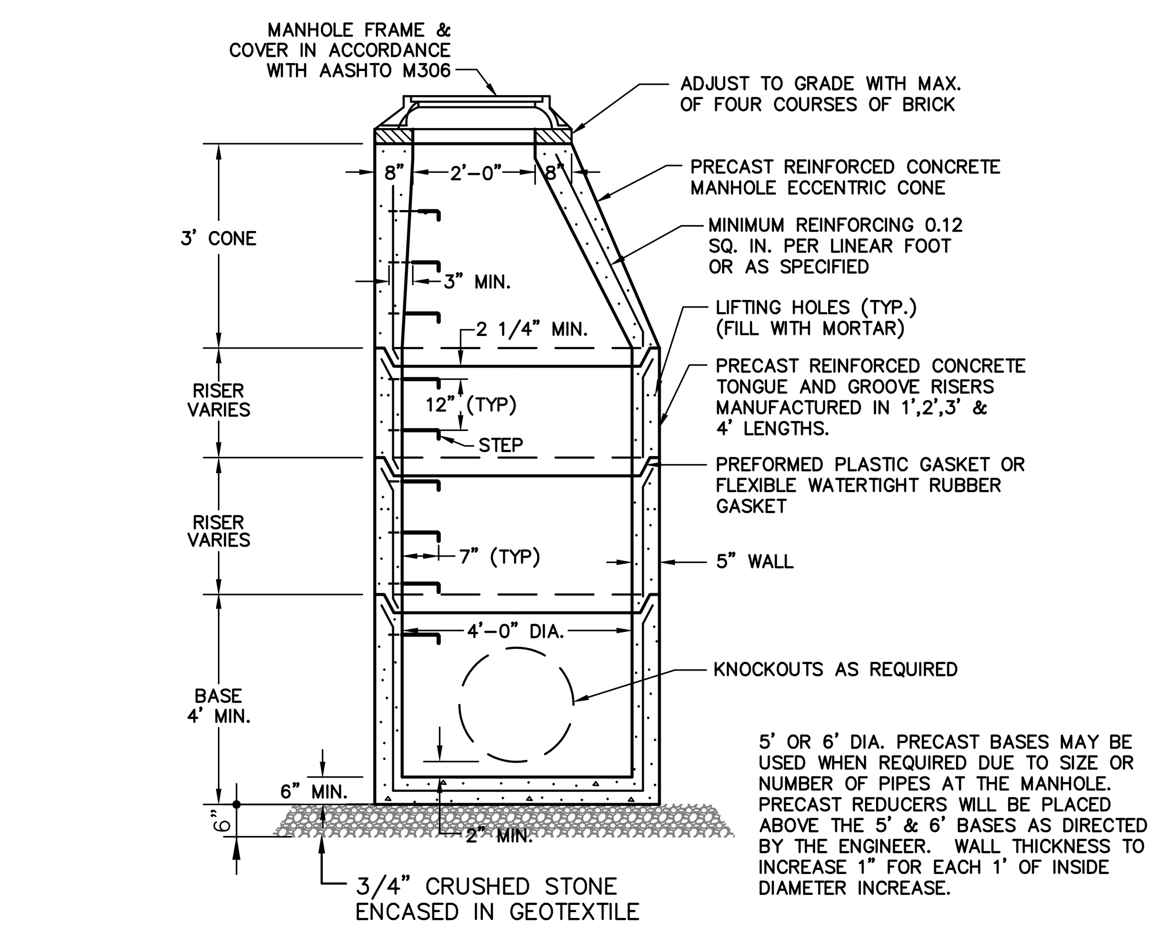

5' OR 6' DIA. PRECAST BASES MAY BE USED WHEN REQUIRED DUE TO SIZE OR NUMBER OF PIPES AT THE MANHOLE. PRECAST REDUCERS WILL BE PLACED ABOVE THE 5' & 6' BASES AS DIRECTED BY THE ENGINEER. WALL THICKNESS TO INCREASE 1" FOR EACH 1' OF INSIDE DIAMETER INCREASE.

TYPICAL MANHOLE

NOTES:

1. LARGER DIAMETER PRECAST BASES MAY BE USED WHEN REQUIRED DUE TO THE SIZE OR NUMBER OF PIPES AT THE MANHOLE. PRECAST REDUCERS WILL BE PLACED ABOVE THE LARGER BASES AS DIRECTED BY THE ENGINEER.
2. PRECAST MANUFACTURER SHALL ADJUST WALL THICKNESS AS NECESSARY FOR STRUCTURES OVER 10' IN DEPTH.
3. PROVIDE HS20 QUALIFIED TOP SLAB FOR SHALLOW MANHOLES.

TYPICAL STORM DRAIN MANHOLE

NOTE:
1) ALL BITUMINOUS CONCRETE, AGGREGATE BASE, SUBBASE SHALL CONFORM TO THE MATERIALS, EQUIPMENT AND CONSTRUCTION REQUIREMENTS AS PER MASSDOT STATE SPECIFICATIONS FOR WORK WITHIN STATE OR TOWN RIGHT-OF-WAY.
2) THE CONTRACTOR SHALL MAINTAIN A MINIMUM 15' WIDE TRAVELWAY AT ROAD CROSSINGS AT ALL TIMES DURING CONSTRUCTION.
3) REPLACE STRIPING AS REQUIRED.

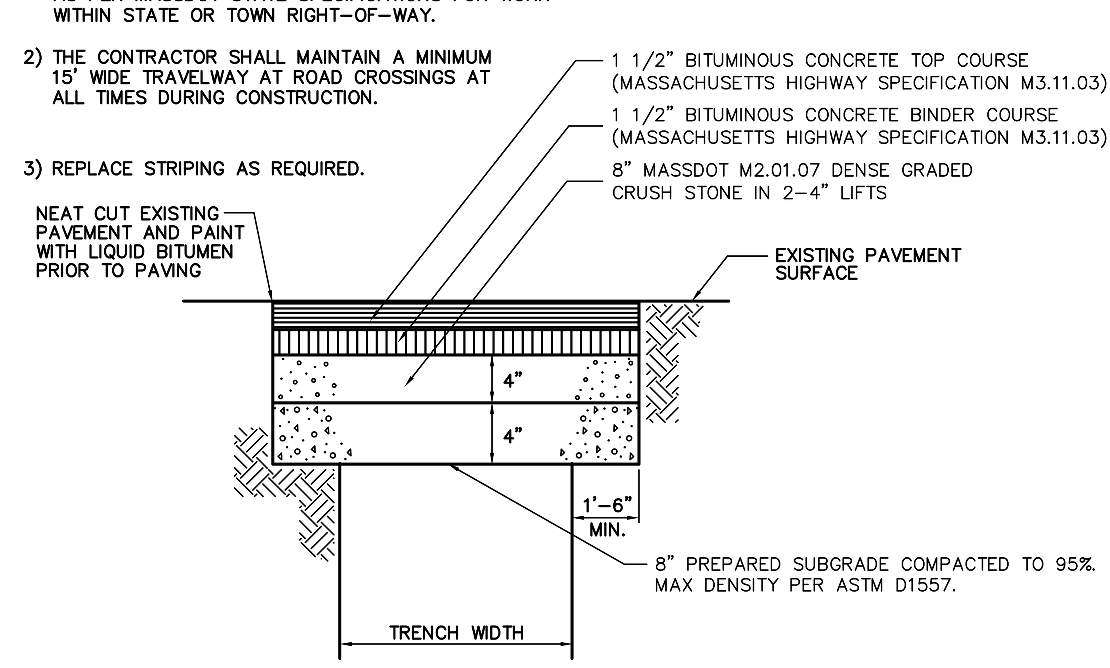

PAVEMENT REPAIR OVER TRENCH

N.T.S.

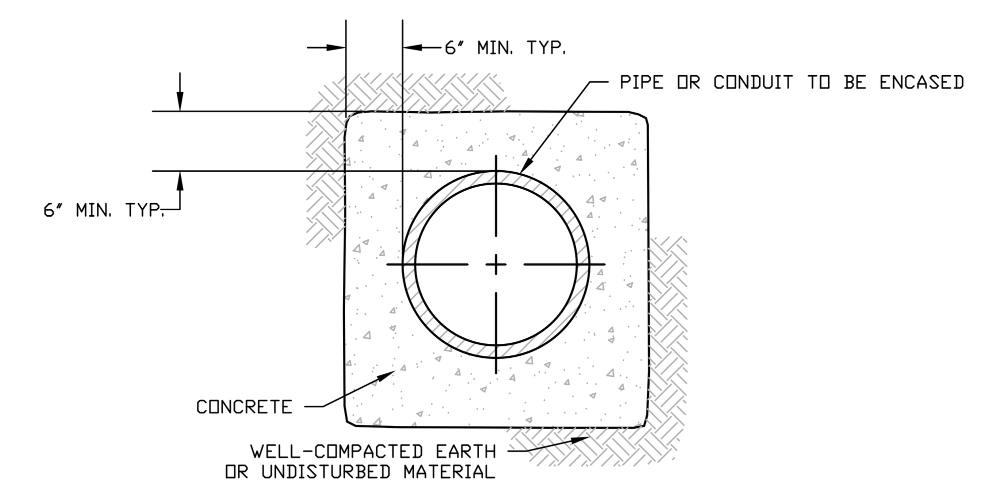

NOTES:

1. EXTEND CONCRETE ENCASEMENT OF CONDUIT 10 FEET BEYOND THE CROSSING FACILITY.

CONCRETE ENCASEMENT SECTION

N.T.S

FOR PERMITTING PURPOSES ONLY
NOT RELEASED FOR CONSTRUCTION

Architecture
Engineering
Environmental
Land Surveying

BL Companies

355 Research Parkway
Meriden, CT 06450
(203) 630-1406
(203) 630-2615 Fax

COMMONWEALTH OF MASSACHUSETTS — ROBERT M. ROLES — CIVIL — No. 54612 — REGISTERED PROFESSIONAL ENGINEER

PROPOSED DEVELOPMENT
100 INDUSTRIAL PARK ROAD
HINGHAM, MASSACHUSETTS

REVISIONS

No.	Date	Desc.
1.	05/12/2020	Revised per Staff and Commission Comments
3.	06/23/2020	Revised per Staff and Commission Comments

Designed	A.T.K.
Drawn	A.T.K.
Reviewed	
Scale	NONE
Project No.	1901517
Date	03/06/2020
CAD File:	DN190151701

Title
DETAIL SHEET

Sheet No.
DN-4

Xref (s): : BD190151701

7/13/2020, AKLOSE, G:\JOBS19\14\1901517\DWG\DN190151701.DWG,DN-4 24 X 36 N.T.S..

© 2020 BL COMPANIES, INC. THESE DRAWINGS SHALL NOT BE UTILIZED BY ANY PERSON, FIRM OR CORPORATION WITHOUT THE SPECIFIC WRITTEN PERMISSION OF BL COMPANIES.

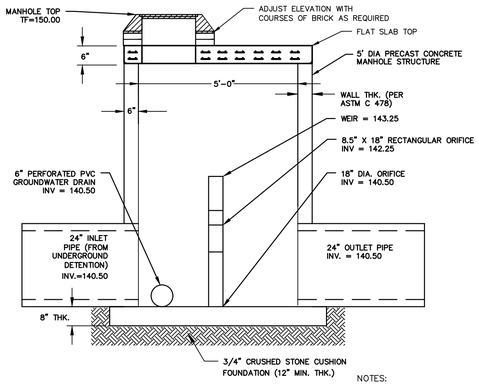

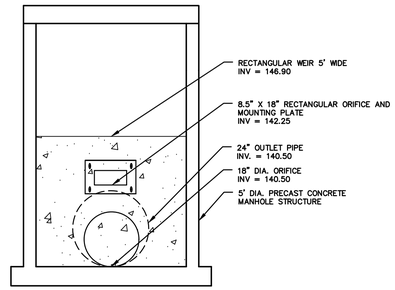

SECTION B-B

NOTES:

1. ORIFICE PLATE SHALL BE 3/8" ALUMINUM PLATE, PAINTED BLACK. PLATE TO HAVE 1"x3" ELONGATED HOLES FOR MOUNTING
2. CORE DRILL A HOLE INTO OUTLET STRUCTURE AND ADJUST THE ORIFICE PLATE AT THE SPECIFIED INVERT ELEVATION.
3. MOUNT ORIFICE PLATE TO OUTLET WITH 3/4" STAINLESS STEEL BOLTS AND WASHERS. ADJUST PLATE TO FINAL ELEVATIONS.
4. SUBMIT SHOP DRAWINGS OF OUTLET STRUCTURE TO OWNER FOR REVIEW & APPROVAL PRIOR TO CONSTRUCTION.
5. SEE GRADING AND DRAINAGE PLANS FOR OUTLET STRUCTURE LOCATION.

DETENTION BASIN 1D OUTLET CONTROL STRUCTURE (OCS-1D)

SCALE: N.T.S.

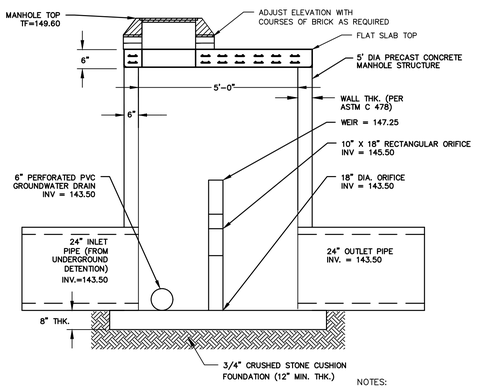

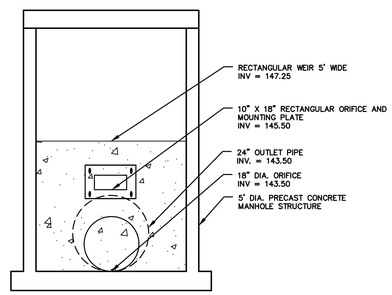

SECTION B-B

NOTES:

1. ORIFICE PLATE SHALL BE 3/8" ALUMINUM PLATE, PAINTED BLACK. PLATE TO HAVE 1"x3" ELONGATED HOLES FOR MOUNTING
2. CORE DRILL A HOLE INTO OUTLET STRUCTURE AND ADJUST THE ORIFICE PLATE AT THE SPECIFIED INVERT ELEVATION.
3. MOUNT ORIFICE PLATE TO OUTLET WITH 3/4" STAINLESS STEEL BOLTS AND WASHERS. ADJUST PLATE TO FINAL ELEVATIONS.
4. SUBMIT SHOP DRAWINGS OF OUTLET STRUCTURE TO OWNER FOR REVIEW & APPROVAL PRIOR TO CONSTRUCTION.
5. SEE GRADING AND DRAINAGE PLANS FOR OUTLET STRUCTURE LOCATION.

DETENTION BASIN 2A OUTLET CONTROL STRUCTURE (OCS-2A)

SCALE: N.T.S.

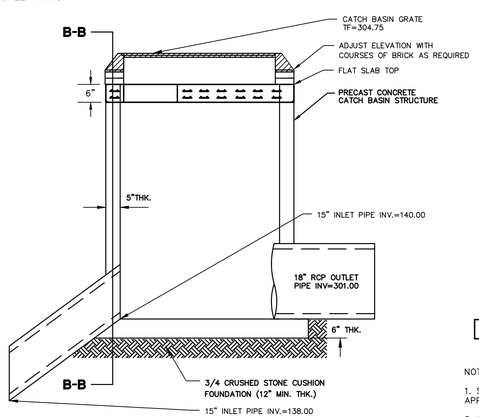

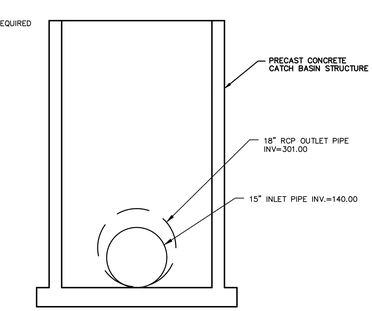

SECTION B-B

NOTES:

1. SUBMIT SHOP DRAWINGS OF OUTLET STRUCTURE TO OWNER FOR REVIEW & APPROVAL PRIOR TO CONSTRUCTION.
2. SEE GRADING AND DRAINAGE PLANS FOR OUTLET STRUCTURE LOCATION.

STORMWATER POND 1E OUTLET CONTROL STRUCTURES (OCS-1E1,1E2)

SCALE: N.T.S.

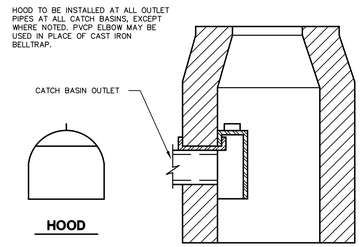

NOTE:
NEENAH – R-3711 OR EQUAL.

HOODED OUTLET

N.T.S.

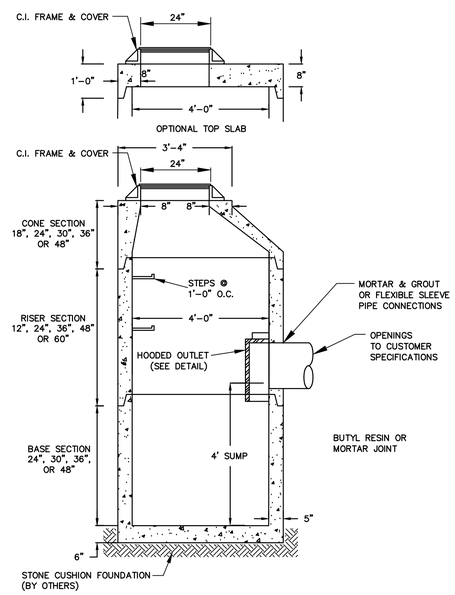

NOTES:

1. GENERAL SPECIFICATIONS: A.S.T.M. C-478.
2. CONCRETE: 4,000 PSI MINIMUM AFTER 28 DAYS.
3. BUTYL RESIN JOINT TO CONFORM TO ASTM C990.
4. REINFORCED STEEL CONFORMS TO ASTM A185 SPEC. 0.12 SQ. IN./LINEAL FT. AND 0.12 SQ. IN. (BOTH WAYS) BASE BOTTOM.
5. DESIGN LOADING PER AASHTO HS-20, 1 TO 5 FEET OF COVER

TYPICAL 48" DIA. CATCH BASIN

N.T.S.

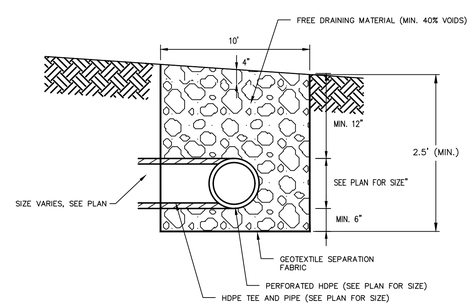

INFILTRATION TRENCH (LEVEL SPREADER) DETAIL

N.T.S.

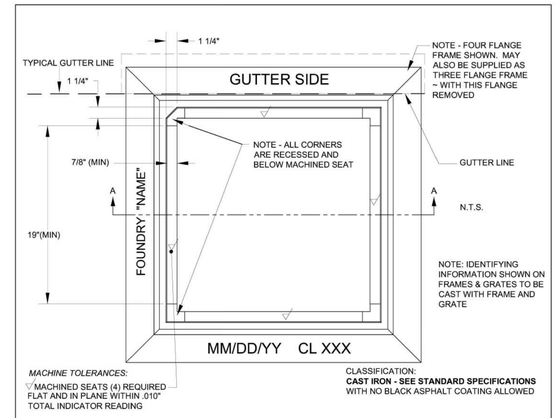

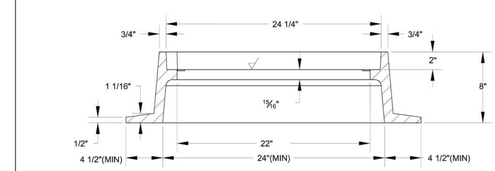

WEIGHTS:
3-FLANGE FRAME 240 LBS. MIN
4-FLANGE FRAME 270 LBS. MIN

AASHTO HS 20 LOAD RATED

CASTING TOLERANCES:
SHALL CONFORM TO AASHTO M306

massDOT Massachusetts Department of Transportation Highway Division
CONSTRUCTION STANDARDS

CATCH BASIN FRAME

DATE OF ISSUE: OCTOBER 2017
DRAWING NUMBER: **E 201.6.0**

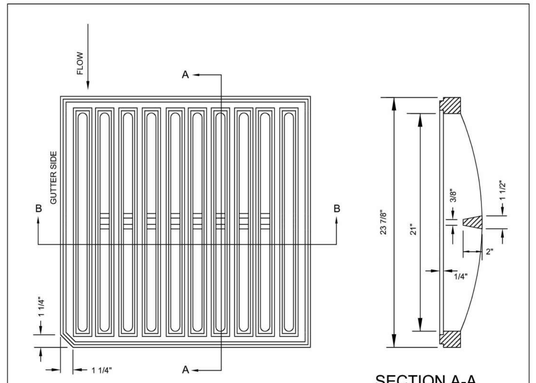

SECTION A-A

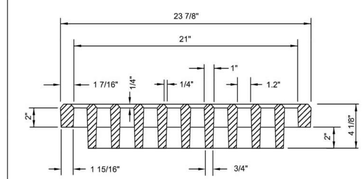

SECTION B-B

NOTES:

1. MATERIAL - CAST IRON; SEE STANDARD SPECIFICATIONS
2. MINIMUM MASS - 210 LBS.

massDOT Massachusetts Department of Transportation Highway Division
CONSTRUCTION STANDARDS

DROP INLET GRATE

DATE OF ISSUE: OCTOBER 2017
DRAWING NUMBER: **E 201.11.0**

FOR PERMITTING PURPOSES ONLY
NOT RELEASED FOR CONSTRUCTION

Architecture
Engineering
Environmental
Land Surveying
BL Companies
355 Research Parkway
Meriden, CT 06450
(203) 630-1406
(203) 630-2615 Fax

COMMONWEALTH OF MASSACHUSETTS
ROBERT M. ROLES
No. 54612
REGISTERED PROFESSIONAL ENGINEER

PROPOSED DEVELOPMENT
100 INDUSTRIAL PARK ROAD
HINGHAM, MASSACHUSETTS

REVISIONS

No.	Date	Desc.
1.	05/07/2020	Revised per Staff and Commission Comments
2.	06/01/2020	Revised per Staff and Commission Comments

Designed	A.T.K.
Drawn	A.T.K.
Reviewed	
Scale	NONE
Project No.	1901517
Date	03/06/2020
CAD File: DN190151701	

Title
DETAIL SHEET

Sheet No.
DN-5

Xref (s): IBD190151701

7/13/2020, AKLOSE, G:\JOBS\PLAN\190151701\DWG\DN190151701.DWG-DN-5-24 X 36 H.T.S.

© 2020 BL COMPANIES, INC. THESE DRAWINGS SHALL NOT BE UTILIZED BY ANY PERSON, FIRM OR CORPORATION WITHOUT THE SPECIFIC WRITTEN PERMISSION OF BL COMPANIES.

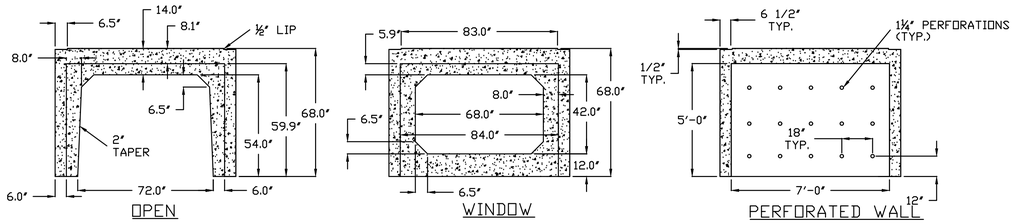

TYPICAL 5' UNIT DIMENSIONS

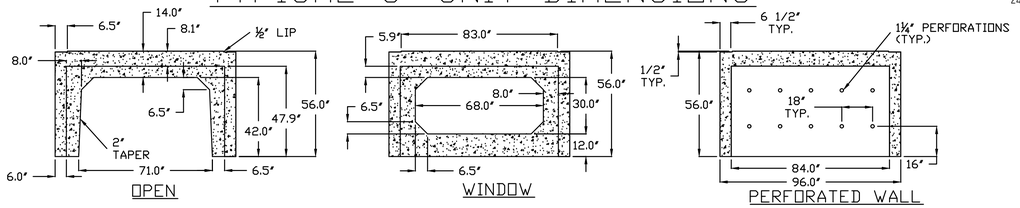

TYPICAL 4' UNIT DIMENSIONS

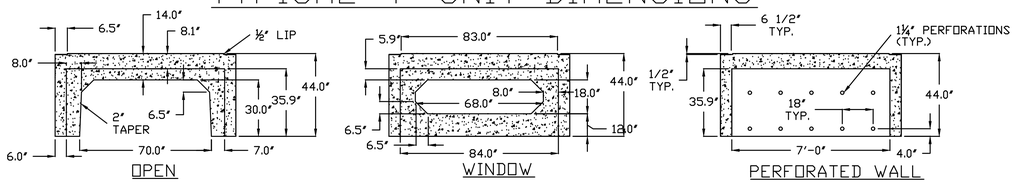

TYPICAL 3' UNIT DIMENSIONS

SYSTEM EXAMPLE:

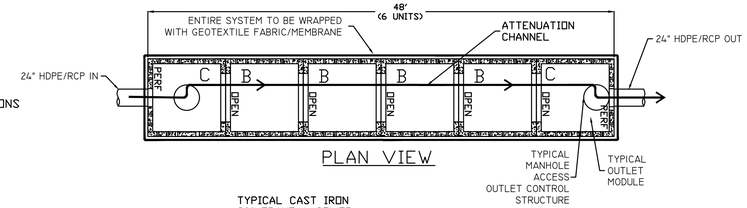

PLAN VIEW

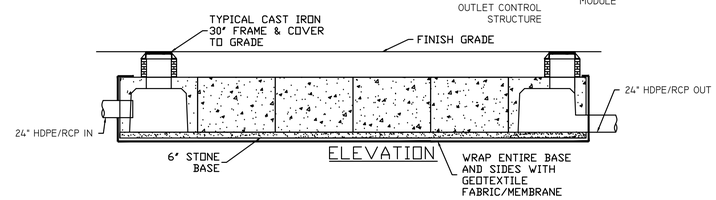

ELEVATION

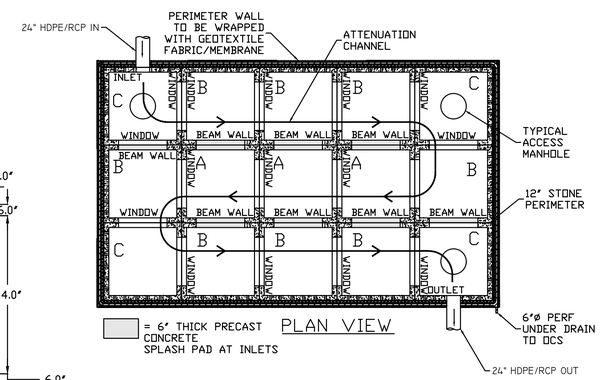

PLAN VIEW

astm specifications:

1. CONCRETE - 5,000 PSI, 28 DAYS
2. REINFORCING STEEL CONFORMS TO LATEST ASTM A615
3. H-20 DESIGN LOADING PER AASHTO HS-20-44

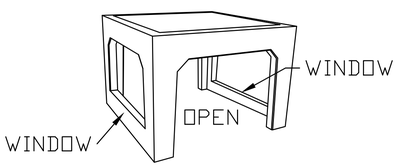

MULTI ROW CENTER

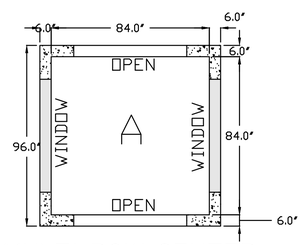

MULTI ROW CENTER

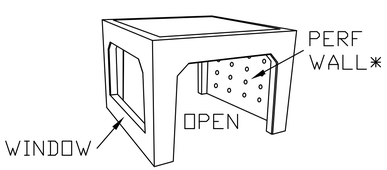

MULTI ROW PERIMETER

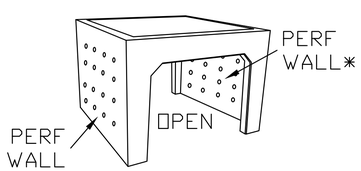

SINGLE ROW CENTER

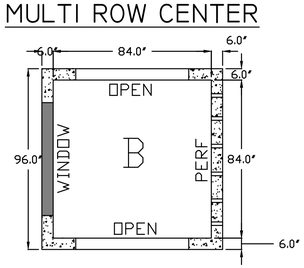

MULTI ROW PERIMETER

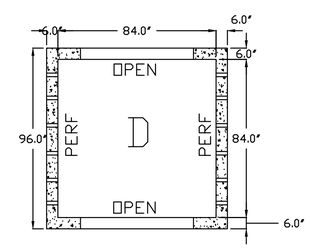

SINGLE ROW CENTER

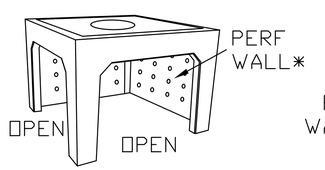

MULTI ROW CORNER

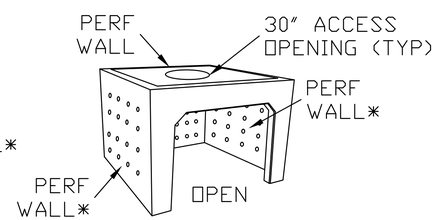

SINGLE ROW END

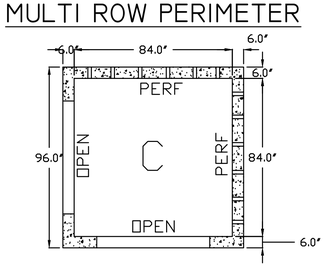

MULTI ROW CORNER

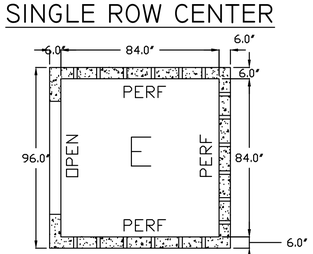

SINGLE ROW END

*IF DESIGNING FOR INFILTRATION

TYPICAL RETAIN-IT® UNDERGROUND STORMWATER MANAGEMENT SYSTEM

SCALE: N.T.S.

SHEA CONCRETE PRODUCTS — New England's Premier Precaster — 800-696-7432 (SHEA) — www.sheaconcrete.com
BILLING ADDRESS: 87 HAVERHILL RD, AMESBURY MA 01913

1000 GALLON SEPTIC TANK

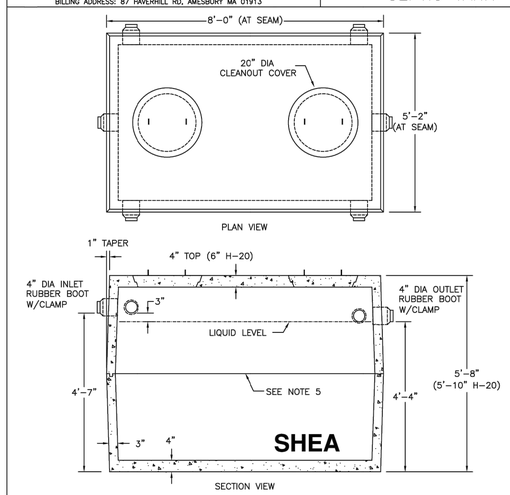

NOTES:
1. CONCRETE: 4,000 PSI MINIMUM AFTER 28 DAYS.
2. CONSTRUCTION OF SEPTIC TANK CONFORMS WITH DEP TITLE 5 REGS, 310 CMR, SECTION 15.226.
3. ALL REINFORCEMENT PER ASTM C1227.
4. TEES AND GAS BAFFLE SOLD SEPARATELY.
5. TONGUE & GROOVE JOINT SEALED WITH BUTYL RESIN.
6. IF COVER EXCEEDS 4 FEET, HEAVY DUTY TANK REQUIRED. ALSO AVAILABLE IN AASHTO HS-20 LOADING.

SHEA PRODUCT ID: 1000/1000H	PREPARED FOR:		FILE NAME: tk1000.dwg	
WEIGHT (LBS): 8,765#/9,785#	DRAWN BY: ARO	DATE: 06/01/18	PAGE: B1.1	NPCA CERTIFIED
773 Salem Street–Wilmington, MA | 153 Cranberry Hwy–Rochester, MA | 87 Haverhill Road–Amesbury, MA | 160 Old Turnpike Rd–Nottingham, NH				

Specifications subject to change without notice

1,000 GALLON PRECAST CONCRETE TANK (OR APPROVED EQUAL)

N.T.S.

FOR PERMITTING PURPOSES ONLY NOT RELEASED FOR CONSTRUCTION

Architecture Engineering Environmental Land Surveying
BL Companies
355 Research Parkway
Meriden, CT 06450
(203) 630-1406
(203) 630-2615 Fax

COMMONWEALTH OF MASSACHUSETTS — ROBERT M. BOLES — CIVIL — No. 54612 — REGISTERED PROFESSIONAL ENGINEER

PROPOSED DEVELOPMENT
100 INDUSTRIAL PARK ROAD
HINGHAM, MASSACHUSETTS

REVISIONS

No.	Date	Desc.
1.	03/12/2020	Revised per Staff and Commission Comments

Designed	A.T.K.
Drawn	A.T.K.
Reviewed	
Scale	NONE
Project No.	1901517
Date	03/06/2020
CAD File: DN190151701	

Title
DETAIL SHEET

Sheet No.
DN-6

Xref (s): - BD190151701

3/13/2020, AKLOSE, G:\JOBS\P\L\L\190151701\DWG\DN190151701.DWG,DN-6 24 X 36 N.T.S.

© 2020 BL COMPANIES, INC. THESE DRAWINGS SHALL NOT BE UTILIZED BY ANY PERSON, FIRM OR CORPORATION WITHOUT THE SPECIFIC WRITTEN PERMISSION OF BL COMPANIES.

LEGEND

- EXISTING WALLS TO REMAIN.
- NEW WALL
- EXISTING DOOR TO REMAIN
- WX — WALL TYPE WALLS WITH NO TAG TO BE INFILLED TO MATCH EXISTING CONSTRUCTION
- NEW DOOR
- IF — INFILL WALL TO MATCH EXISTING

KEYNOTES

#	DESCRIPTION
01	NEW OVERHEAD DOOR WITH DOCK EQUIPMENT PACKAGE. SEE DOOR SCHEDULE.
07	6" DIA. STEEL BOLLARD. PAINT SAFETY YELLOW (P-9). SEE DETAIL 5/A9.01
08	INACTIVE DOCK DOOR. REFERENCE INACTIVE DOCK DOOR DETAILS ON A8.02.
12	SECURITY WINDOW FILM VHF-1. PROVIDE AT ALL WINDOWS AND DOORS EXPOSED IN WAREHOUSE FROM FINISHED FLOOR TO 12'-0" A.F.F. SEE MATERIAL FINISH KEY ON A10.01 FOR MORE INFO.
13	WATER COOLERS PROVIDED AND INSTALLED BY TENANT. FINAL NUMBER AND LOCATIONS TO BE DETERMINED. SEE PLUMBING AND ELECTRICAL DRAWINGS.
18	CARD READER BY TENANTS SECURITY CONTRACTOR. G.C. TO PROVIDE CONDUITS AND PULL STRINGS WITHIN PARTITIONS.
35	NEW MECHANICAL LOUVERS. SEE MECHANICAL DRAWINGS FOR MORE INFO.
41	PREFAB GUARDRAIL. LOCATION SHOWN SCHEMATICALLY. FINAL LOCATION TO BE COORDINATED WITH TENANT. SEE 4/A9.01.
52	INSTALL NEW STAIR, RAILING AND BOLLARDS.
93	AI PHONE LOCATION.

CONSTRUCTION GENERAL NOTES:

1. FIELD VERIFY ALL DIMENSIONS AND ADVISE ARCHITECT OF ANY DISCREPANCIES PRIOR TO COMMENCEMENT OF WORK OR PROCUREMENT OF DIMENSION SENSITIVE PRODUCTS.
2. DIMENSIONS ARE TO THE FACE OF STUDS, UNLESS OTHERWISE NOTED.
3. GYPSUM WALLBOARD
   - A. WORK SHALL COMPLY WITH ASTM C840-STANDARD SPECIFICATIONS FOR APPLICATION AND FINISHING OF GYPSUM BOARD.
   - B. GYPSUM WALLBOARD TO RECEIVE LEVEL 4 FINISHES PER ASTM C840. SURFACE SHALL BE SMOOTH AND READY TO RECEIVE FINISH MATERIAL. PROVIDE MOISTURE RESISTANT GWB IN RESTROOM WETWALLS AND AT SINK COUNTERS.
   - C. GYPSUM WALLBOARD NOT TO RECEIVE FINISHES SHALL BE FINISHED TO LEVEL 2 FINISH PER ASTM C840
   - D. WATER RESISTANT GYPSUM TO BE 5/8" DENS ARMOR PLUS OR EQUAL COMPLYING WITH ASTM C1178, C1288 OR C1325. PROVIDE AT PARTITIONS ADJACENT TO PLUMBING FIXTURES.
   - E. ALL GYPSUM WALLBOARD IS TO BE 5/8" THICK UNLESS NOTED OTHERWISE. PROVIDE TYPE "X" GYPSUM WALLBOARD AT ALL FIRE RATED PARTITIONS.
4. WHERE NEW PARTITIONS ARE ALIGNED WITH EXISTING, ALIGN FROM FINISH FACE OF BOTH. IF PARTITIONS ARE TO ATTACH, MAKE TRANSITION SMOOTH UNIFORM SURFACE.
5. UNIFORM LOAD AT PARTITIONS IS 5 PSF WITH ALLOWABLE DEFLECTION OF L/240 UNLESS SHELVING AND EQUIPMENT IS PROPOSED FOR ATTACHMENT.
6. ALL PARTITIONS TO BE BUILT TO DECK SHALL ENCOMPASS ANY STRUCTURE SUCH AS JOISTS AND BEAMS THAT MAY NEED TO BE FRAMED OUT TO PROVIDE DRYWALL TO DECK. ALL PENETRATIONS AND FLUTES IN DECK SHALL BE SEALED AS REQUIRED.
7. PROVIDE BRACING PER MANUFACTURER RECOMMENDATIONS OF ALL PARTITIONS THAT DO NOT EXTENDED FULL HEIGHT TO UNDERSIDE OF STRUCTURE ABOVE.
8. ALL PARTITION FRAMING THAT EXTENDS FROM SLAB TO STRUCTURE ABOVE. PROVIDE GALVANIZED STEEL SHEET DEEP LEG DEFLECTION TRACK (20 GA). 'SLP-TRK' BY SLIP TRACK SYSTEMS, INC. SECURE TO STRUCTURE WITH FASTENERS AT 2'-0" O.C. MAXIMUM. DO NOT SECURE TRACK TO VERTICAL STUDS. PROVIDE MINIMUM 2 1/2" TO TOP OF STUD.
9. ALL BOTTOM TRACK RUNNERS TO BE HELD IN PLACE WITH FASTENERS AT 2'-0" O.C. MAX. WITH HILTI POWDER DRIVER ANCHORS #2388, 0.145" DIA. SHANK WITH 1 1/8" MIN. PENETRATION.
10. PROVIDE HORIZONTAL BRIDGING IN ALL PENETRATION FRAMING AT MAXIMUM OF 6'-0" O.C. VERTICALLY. UNLESS OTHERWISE NOTED.
11. METAL STUD NON-STRUCTURAL WALL SYSTEMS TO FOLLOW C754 AND ASTM 645.
12. FIRE STOPPING REQUIREMENTS: ALL PENETRATIONS WITHIN OR THROUGH RATED ASSEMBLIES SHALL BE TIGHTLY SEALED USING APPROVED LISTED MATERIAL & SYSTEMS COMPLYING WITH ASTM E 814 OR UL-1479 (AS PER CODE). SEALANT MEETING THESE REQUIREMENTS TO BE FLAME STOP OR APPROVED EQUAL.
13. PROVIDE COMPRESSIBLE FIRE STOPPING MATERIAL AT CEILING LEVEL OF ALL PARTITIONS IN WHICH THE GYP. BD. DOES NOT EXTEND TO DECK. HOLD FIRE STOPPING IN PLACE WITH 1" WIDE (25GA.) 1 1/2" x 1 1/2" IMPALING ANGLE ON EACH STUD TO SECURE EACH END OF MATERIAL.
14. PROVIDE ACOUSTICAL SEALANT AT THE CONNECTION OF ALL GYP. BD. TO DECK OR SLAB CONDITIONS. HOLD GYP. BD. 3/8" OFF STRUCTURE FOR SEALANT. PROVIDE J-BEAD AT ALL SEALED EDGES.
15. PER 719.2 & 719.3 OF IBC, ALL CONCEALED AND EXPOSED INSULATION SHALL HAVE A CLASS A FLAME SPREAD AND SMOKE DEVELOPMENT INDEX PER ASTM E 84.
16. INSULATING MATERIALS WHEN INSTALLED IN BUILDINGS OF ANY TYPE CONSTRUCTION SHALL COMPLY WITH LOCAL JURISDICTION CODE.
17. ALL PLYWOOD & BLOCKING TO BE FIRE RETARDANT TREATED.
18. PROVIDE CONTROL JOINTS IN ALL WALLS EXCEEDING 30' IN LENGTH AND HEIGHT AND EVERY 30' THEREAFTER. USG#093
19. ALL SLABS TO BE STRIPPED AND PREPARED FOR SEALING AND TENANT FLOOR STRIPING. REPAIR ALL CONTROL JOINTS AS REQUIRED.
20. ALL DOORS SHALL BE LOCATED WITH HINGE SIDE OF FRAME 4" OFF FINISHED WALL. (AT CORNER CONDITION), UNLESS OTHERWISE NOTED.
21. 5% BUT NOT LESS THAN 1% OF SEATING AND STANDING SURFACES AT DINING SURFACES SHALL BE ACCESSIBLE.
22. ZIPWALLS TO BE INSTALLED FOR PROTECTION DURING TIME OF CONSTRCTION.

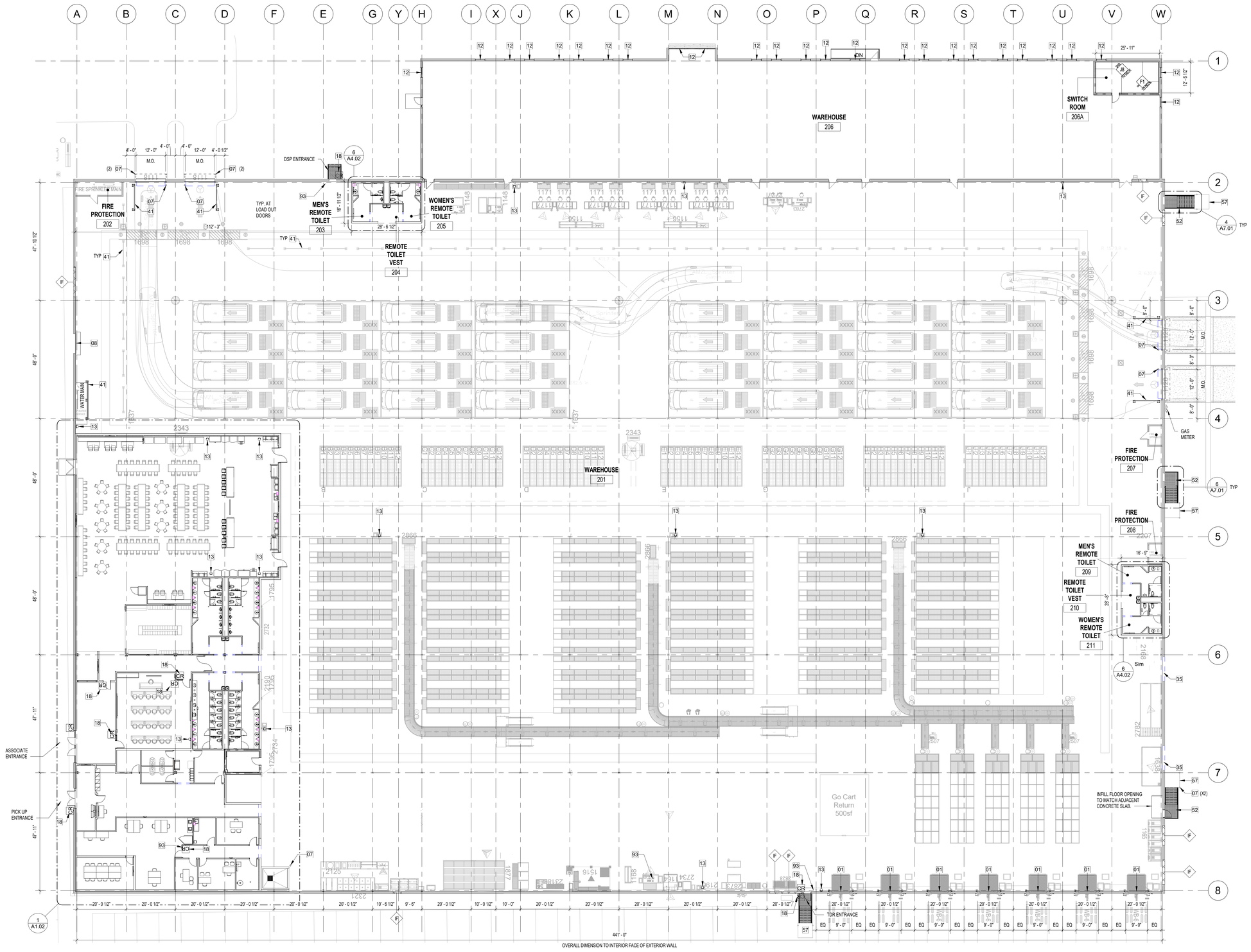

1 OVERALL FLOOR PLAN
1/16" = 1'-0"

GEOGRAPHICAL NORTH

Architecture Engineering Environmental Land Surveying
BL Companies
355 Research Parkway
Meriden, CT 06450
(203) 630-1406
(203) 630-2615 Fax

DBC6
100 INDUSTRIAL PARK ROAD
HINGHAM, MASSACHUSETTS

NO	DATE	REVISIONS DESCRIPTION

Designed	Designer
Drawn:	Author
Reviewed:	Approver
Scale:	As indicated
Project No.	1901517
Date:	05/04/2020

Title:
OVERALL FLOOR PLAN

Sheet No.
A1.01

5/4/2020 1:46:25 PM C:\Users\WFCUser5\Documents\1901517-ArchR18-Central_wfcuser5.rvt

© 2019 BL COMPANIES, INC. THESE DRAWINGS SHALL NOT BE UTILIZED BY ANY PERSON, FIRM OR CORPORATION WITHOUT THE SPECIFIC WRITTEN PERMISSION OF BL COMPANIES.