COMPREHENSIVE PERMIT APPLICATION PLANS

BROADSTONE BARE COVE

230 BEAL STREET

HINGHAM, MA

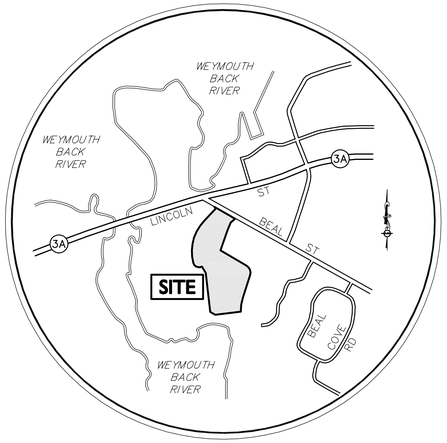

LOCUS MAP
NOT TO SCALE

LIST OF DRAWINGS			
DRAWING TITLE	SHEET NO.	ISSUED	REVISED
ABBREVIATIONS & NOTES	ABB-1 - ABB-3	08-12-2016	01-04-2017
EXISTING CONDITIONS PLAN	1 - 4	01-18-2016	-
DEMOLITION PLAN	C-1A - C-1B	08-12-2016	01-04-2017
LAYOUT & MATERIALS PLAN	C-2A - C-2B	08-12-2016	01-04-2017
GRADING & DRAINAGE PLAN	C-3A - C-3B	08-12-2016	01-10-2017
UTILITY PLAN	C-4A - C-4B	08-12-2016	01-04-2017
ELECTRICAL PLAN	C-5A - C-5B	08-12-2016	01-04-2017
EROSION CONTROL PLAN	C-6A - C-6B	08-12-2016	01-04-2017
FIRE TRUCK TURNING PLAN	C-7A	08-12-2016	01-04-2017
SCHOOL BUS TURNING PLAN	C-7B	08-12-2016	01-04-2017
DETAILS	D-1 - D-9	08-12-2016	01-10-2017

OWNER/APPLICANT:
BROADSTONE BARE COVE ALLIANCE, LLC. C/O
ALLIANCE RESIDENTIAL COMPANY
184 HIGH STREET, SUITE 401
BOSTON, MA 02110

SITE ENGINEER:
ALLEN & MAJOR ASSOCIATES, INC.
100 COMMERCE WAY
WOBURN, MA 01888-0118

LAND SURVEYOR:
PRECISION LAND SURVEYING, INC.
32 TURNPIKE STREET
SOUTHBOROUGH, MA 01772

ARCHITECT:
CUBE 3 STUDIO
360 MERRIMACK STREET
BUILDING 5, FLOOR 3
LAWRENCE, MA 01843

LANDSCAPE ARCHITECT:
SHADLEY ASSOCIATES, P.C.
1730 MASSACHUSETTS AVENUE
LEXINGTON, MA 02420-5301

PREPARED BY:
ALLEN & MAJOR ASSOCIATES, INC.
civil & structural engineering ◆ land surveying
environmental consulting ◆ landscape architecture
www.allenmajor.com
100 COMMERCE WAY
P.O. BOX 2118
WOBURN MA 01888-0118
TEL: (781) 935-6889
FAX: (781) 935-2896
WOBURN, MA ◆ LAKEVILLE, MA ◆ MANCHESTER, NH

Copyright©2017 Allen & Major Associates, Inc.
All Rights Reserved

GRAPHIC SCALE
100 0 50 100 200 400
(IN FEET)
1 inch = 100 ft.

ISSUED FOR DRAINAGE REPORT
JANUARY 10, 2017

PROFESSIONAL ENGINEER FOR
ALLEN & MAJOR ASSOCIATES, INC.

ISSUED FOR COMPREHENSIVE PERMIT: AUGUST 12, 2016
ISSUED FOR ZBA RESUBMITTAL: OCTOBER 25, 2016
ISSUED FOR ZBA RESUBMITTAL: NOVEMBER 2, 2016
ISSUED FOR ZBA RESUBMITTAL: JANUARY 4, 2017

N:\PROJECTS\2118-02\CIVIL\DRAWINGS\CURRENT\C-2118-02 - COVER.DWG

GENERAL NOTES:

1. FOR EXISTING CONDITIONS SURVEY, SEE PLAN ENTITLED "EXISTING CONDITIONS PLAN", AS PREPARED BY PRECISION LAND SURVEYING, INC. THE ON THE GROUND SURVEY WAS PERFORMED ON JANUARY 6, 2016.
2. THE ELEVATIONS SHOWN ARE BASED ON THE NORTH AMERICAN VERTICAL DATUM OF 1988 (NAVD88), AND WERE DETERMINED BY GPS OBSERVATIONS AND AN OPUS REDUCTION ON DECEMBER 30, 2016.
3. THE SUBJECT PROPERTY IS LOCATED WITHIN THE OFFICE PARK ZONING DISTRICT, AS WELL AS THE FLOOD PLAIN AND WATERSHED PROTECTION DISTRICTS OF THE TOWN OF HINGHAM.
4. OVERALL LOT SIZE: 12.059± ACRES
5. THIS PROJECT WILL BE SERVED BY PUBLIC WATER AND SEWER, NATURAL GAS, TELEPHONE, CABLE AND ELECTRIC. ALL UTILITY LINES WILL BE INSTALLED UNDERGROUND UNLESS OTHERWISE NOTED.
6. THE CONTRACTOR IS SPECIFICALLY CAUTIONED THAT THE LOCATION AND/OR ELEVATION OF EXISTING UTILITIES AND STRUCTURES AS SHOWN ON THESE PLANS IS BASED ON RECORDS OF VARIOUS UTILITY COMPANIES AND WHERE POSSIBLE, MEASUREMENTS TAKEN IN THE FIELD. THIS INFORMATION IS NOT TO BE RELIED ON AS BEING EXACT OR COMPLETE. THE LOCATION OF ALL UNDERGROUND UTILITIES AND STRUCTURES SHALL BE VERIFIED IN THE FIELD BY THE CONTRACTOR PRIOR TO THE START OF CONSTRUCTION. THE CONTRACTOR MUST CONTACT THE APPROPRIATE UTILITY COMPANY, ANY GOVERNING PERMITTING AUTHORITY, AND "DIGSAFE" AT LEAST 72 HOURS PRIOR TO ANY EXCAVATION WORK TO REQUEST EXACT FIELD LOCATION OF UTILITIES AND THE ENGINEER SHALL BE NOTIFIED IN WRITING OF ANY UTILITIES INTERFERING WITH THE PROPOSED CONSTRUCTION AND APPROPRIATE REMEDIAL ACTION TAKEN BEFORE PROCEEDING WITH THE WORK. IT SHALL BE THE RESPONSIBILITY OF THE CONTRACTOR TO RELOCATE ALL EXISTING UTILITIES WHICH CONFLICT WITH THE PROPOSED IMPROVEMENTS SHOWN ON THE PLANS AT NO ADDITIONAL COST.
7. ALL MAIN BUILDING ENTRANCES AND WALKS SHALL BE ACCESSIBLE PER FEDERAL ADA & MA AAB REGULATIONS.
8. ALL SITE WORK DONE FOR THIS PROJECT SHALL BE IN STRICT ACCORDANCE WITH THE SITE PLANS AND SITE WORK SPECIFICATIONS FOR CONSTRUCTION.
9. ANY DAMAGE TO PRIVATE OR PUBLIC PROPERTIES DUE TO THE CONTRACTOR'S ACTIVITIES SHALL BE REPAIRED AND RESTORED BY THE CONTRACTOR AT THEIR OWN EXPENSE.
10. ALL PROPERTY MARKERS AND STREET LINE MONUMENTS SHALL BE PROPERLY PROTECTED DURING CONSTRUCTION. ANY DAMAGE TO THESE ITEMS SHALL BE REPAIRED AND RESTORED BY A SURVEYOR REGISTERED IN THE STATE OF MASSACHUSETTS AT THE CONTRACTOR'S EXPENSE.
11. ALL APPLICABLE PERMITS AND AN APPROVED SET OF PLANS SHALL BE AVAILABLE AT THE CONSTRUCTION SITE.
12. THE CONTRACTOR IS RESPONSIBLE FOR SCHEDULING A PRECONSTRUCTION MEETING THE WITH THE APPROPRIATE TOWN DEPARTMENTS, THE APPROPRIATE UTILITY COMPANIES, THE OWNER AND OWNER'S REPRESENTATIVE. THE MEETING SHALL TAKE PLACE PRIOR TO THE START OF CONSTRUCTION AND THE CONTRACTOR MUST PROVIDE 48 HOURS NOTICE TO ALL ATTENDEES PRIOR TO THE START OF THE MEETING.
13. APPROPRIATE WARNING SIGNS, MARKERS, BARRICADES, AND/OR FLAG MEN SHALL BE PROVIDED TO REGULATE TRAFFIC. CONSTRUCTION TRAFFIC CONTROLS SHALL BE IMPLEMENTED AND OPERATED ACCORDING TO THE MASS DEPARTMENT OF TRANSPORTATION (MASSDOT), THE MANUAL ON UNIFORM TRAFFIC CONTROL DEVICES (MUTCD), AND THE LOCAL AUTHORITY.
14. THE CONTRACTOR IS RESPONSIBLE FOR OBTAINING ADDITIONAL BENCHMARK INFORMATION IF REQUIRED. THE CONTRACTOR IS RESPONSIBLE FOR LOCATING AND PROTECTING ALL EXISTING BENCHMARKS. IF IT IS NECESSARY TO RELOCATE A BENCHMARK, IT SHALL BE RELOCATED BY A MASSACHUSETTS PROFESSIONAL LAND SURVEYOR AND DONE SO AT THE CONTRACTOR'S EXPENSE.
15. ALL BUILDING DIMENSIONS ARE MEASURED TO THE OUTSIDE FACE OF THE BUILDING.
16. ALL RADII ARE 3 FEET UNLESS OTHERWISE NOTED.
17. ALL PARKING LOT AND AISLE DIMENSIONS ARE TAKEN FROM THE FACE OF CURB AND INDICATE EDGE OF PAVEMENT.
18. CONSTRUCTION DURING WET WEATHER OR WINTER CONDITIONS IS TO BE ANTICIPATED AND PROVISIONS TO ADEQUATELY ADDRESS THESE CONDITIONS SHALL BE THE RESPONSIBILITY OF THE CONTRACTOR AT NO ADDITIONAL COST.
19. THE CONTRACTOR IS RESPONSIBLE FOR OBTAINING AND PAYING FOR ANY PERMITS AND/OR CONNECTION FEES REQUIRED TO CARRY OUT THE WORK; INCLUDING, BUT NOT LIMITED TO, DEMOLITION.
20. DISPOSAL OF ALL DEMOLISHED MATERIALS, INCLUDING EXISTING MISC. CONSTRUCTION DEBRIS, IS THE RESPONSIBILITY OF THE CONTRACTOR AND MUST BE DISPOSED OF OFF-SITE IN ACCORDANCE WITH ALL FEDERAL, STATE, AND LOCAL MUNICIPAL REQUIREMENTS AT NO ADDITIONAL COST.
21. ALL DISTURBED AREAS NOT NOTED TO RECEIVE OTHER TREATMENT ARE TO RECEIVE SIX INCHES (6") MINIMUM OF TOPSOIL & SEED, AND SHALL BE MAINTAINED UNTIL ESTABLISHED & ACCEPTED.
22. EXISTING STRUCTURES WITHIN CONSTRUCTION LIMITS ARE TO BE PROTECTED, ABANDONED, REMOVED OR RELOCATED AS NECESSARY.
23. CONTRACTOR SHALL BE RESPONSIBLE FOR ALL RELOCATIONS, INCLUDING BUT NOT LIMITED TO, UTILITIES, STORM DRAINAGE, SIGNS, & POLES, ETC. AS REQUIRED. ALL WORK SHALL BE IN ACCORDANCE WITH THE TOWN OF HINGHAM'S GOVERNING AUTHORITY'S SPECIFICATIONS AND SHALL BE APPROVED BY SUCH.
24. THE CONTRACTOR SHALL COORDINATE WITH ALL UTILITY COMPANIES TO DETERMINE EXACT POINT OF SERVICE CONNECTION AND DISCONNECTION AT EXISTING UTILITY.

DIG SAFE

BEFORE YOU DIG
CALL 811 OR
1-888-DIG-SAFE
1-888-344-7233

GENERAL NOTES (CONTINUED):

25. EXISTING AND PROPOSED GAS SERVICE LOCATIONS ARE APPROXIMATE ONLY. THE CONTRACTOR SHALL CONFIRM WITH THE GAS COMPANY THAT THE GAS LINE INSTALLATION & DISCONNECTION SHALL BE BY THE LOCAL GAS COMPANY. THE CONTRACTOR SHALL GIVE THE GAS COMPANY ADVANCE NOTICE OF WHEN THE GAS LINE CAN BE INSTALLED.
26. EXISTING & PROPOSED ELECTRIC AND COMMUNICATIONS (TELEPHONE AND CABLE) SYSTEMS LOCATIONS ARE APPROXIMATE ONLY AND SHALL BE COORDINATED AND SCHEDULED WITH THE APPROPRIATE UTILITY COMPANY SERVICING THE PROJECT SITE.
27. CONTRACTOR IS RESPONSIBLE FOR DIGGING TEST HOLES AND VERIFYING ANY EXISTING UTILITY OR STRUCTURE PRIOR TO CONSTRUCTION. CONTRACTOR SHALL VERIFY THAT BASED ON EXACT LOCATION OF EXISTING UTILITIES, THERE ARE NO CONFLICTS BETWEEN THEM AND THE PROPOSED UTILITIES.
28. THE CONTRACTOR SHALL ADHERE TO ALL PERMIT CONDITIONS PROVIDED BY ALL GOVERNING AGENCIES AT NO ADDITIONAL COSTS. THIS INCLUDES, BUT IS NOT LIMITED TO, BUILDING PERMITS, DEMOLITION PERMITS, PLUMBING, GAS, AND ELECTRICAL PERMITS; PERMITS FROM THE PLANNING BOARD OR TOWN COUNCIL, AND AN ORDER OF CONDITIONS FROM THE HINGHAM ZONING BOARD OF APPEALS.
29. IT IS THE CONTRACTORS RESPONSIBILITY TO PROPERLY DISPOSE OF AND ABATE ALL BUILDING MATERIALS OR HAZARDOUS MATERIALS ONSITE IN ACCORDANCE WITH ALL STATE, FEDERAL, AND LOCAL LAWS AND REGULATIONS AT NO ADDITIONAL COST TO THE OWNER.
30. DURING EXCAVATION, ANY EXISTING EARTH CUT MATERIALS THAT DOES NOT MEET THE ORDINARY FILL SPECIFICATIONS OR LOAM SPECIFICATIONS AND CANNOT BE REUSED SHALL BE REMOVED OFFSITE BY THE CONTRACTOR AT NO ADDITIONAL COST TO THE OWNERS. MATERIAL WHICH DOES NOT MEET THE SPECIFICATION INCLUDES ALL BOULDERS, ROCKS, CONSTRUCTION DEBRIS, AND MISC. MATERIAL. PRIOR TO REUSE, CONTRACTOR TO PROVIDE TESTING REPORT OF SIEVE ANALYSIS TO ENGINEER FOR APPROVAL. CONTRACTOR CAN AMEND MATERIALS AND CONTINUE TO RETEST AS NECESSARY AT NO ADDITIONAL COST TO OWNER. AFTER AMENDING IF MATERIAL STILL DOES NOT MEET THE SPECIFICATIONS IT IS TO BE REMOVED FROM SITE AT NO ADDITIONAL COST TO THE OWNER AND IN ACCORDANCE WITH ALL FEDERAL, STATE, AND LOCAL LAWS AND REGULATIONS.
31. ANY PROPOSED SIGNAGE SHALL BE APPROVED BY SEPARATE APPLICATION TO THE DIRECTOR OF INSPECTIONAL SERVICES AND/OR THE APPROPRIATE MUNICIPAL AUTHORITY INCLUDING BUT NOT LIMITED TO THE ZONING BOARD OF APPEALS AND TOWN COUNCIL. ALL PROPOSED SIGNAGE MUST MEET THE REQUIREMENTS OF THE TOWN OF HINGHAM ZONING CODE.
32. THE CONTRACTOR SHALL REVIEW THE RECORD PLAN ENTITLED "BUILDING DEMOLITION AND DEBRIS DISPOSAL AREA PLAN" OF 1988 AND VERIFY, IN THE FIELD, THE ELEVATION AND LOCATION OF THE DEBRIS AND STUMP BURIAL AREA. SPECIAL PRECAUTIONS SHALL BE TAKEN TO ENSURE THIS AREA IS NOT DISTURBED DURING CONSTRUCTION.

GRADING & DRAINAGE NOTES:

1. EXISTING PAVEMENT SHALL BE SAW-CUT AND PAVEMENT JOINT SHALL BE INSTALLED WHERE NECESSARY TO ENSURE A SMOOTH CONTINUOUS GRADE.
2. THE ARCHITECTURAL PLANS SHALL BE REFERRED TO IN ORDER TO DETERMINE THE EXACT LOCATIONS OF VESTIBULE, SLOPED PAVING, EXIT PORCHES, HANDICAPPED RAMPS, TRUCK DOCKS, COMPACTOR PAD, ROOF DRAIN LATERALS, AND PRECISE BUILDING DIMENSIONS.
3. ALL GRADING OPERATIONS SHALL BE COORDINATED WITH THE APPROPRIATE UTILITY COMPANIES.
4. IN LANDSCAPED AREAS THE TOP ELEVATION OF MANHOLES SHALL MATCH THE FINISH GRADE OF THE TOPSOIL. IN PAVED AREAS THE TOP ELEVATIONS OF MANHOLES SHALL MATCH FINISH GRADE.
5. ALL AREAS DISTURBED DURING CONSTRUCTION SHALL BE STABILIZED AS SOON AS POSSIBLE UPON COMPLETION OF CONSTRUCTION WORK IN THE AREA.
6. TEMPORARY STRAW BALE AND/OR SILT SACK PROTECTION SHALL BE INSTALLED AND MAINTAINED AT EXISTING DRAINAGE STRUCTURES DURING CONSTRUCTION, TO PREVENT SEDIMENT LADEN RUNOFF FROM ENTERING THE DRAINAGE SYSTEM.
7. CONTRACTOR IS RESPONSIBLE FOR DEMOLITION OF EXISTING STRUCTURES INCLUDING REMOVAL OF ANY EXISTING UTILITIES SERVING THE STRUCTURE PER DEMOLITION PLAN.
8. ALL CATCH BASINS, MANHOLES, INFILTRATION SYSTEM, AND WATER QUALITY STRUCTURES ARE TO BE CLEANED OUT TO REMOVE ALL CONSTRUCTION SILT AND DEBRIS, PRIOR TO FINAL APPROVAL.
9. IF ANY EXISTING UTILITY STRUCTURES TO REMAIN ARE DAMAGED DURING CONSTRUCTION IT SHALL BE THE CONTRACTOR'S RESPONSIBILITY TO REPAIR AND/OR REPLACE THE EXISTING STRUCTURE AS NECESSARY TO RETURN IT TO EXISTING CONDITIONS OR BETTER AT NO ADDITIONAL COST.
10. ALL STORM PIPE ENTERING STRUCTURES SHALL BE GROUTED TO ASSURE CONNECTION AT STRUCTURE IS WATERTIGHT.
11. ALL STORM DRAIN MANHOLES SHALL HAVE TRAFFIC BEARING RIMS & COVERS & SHALL BE LABELED "DRAIN."
12. THE CONTRACTOR SHALL ADHERE TO ALL TERMS & CONDITIONS AS OUTLINED IN THE GENERAL N.P.D.E.S. PERMIT FOR STORM WATER DISCHARGE ASSOCIATED WITH CONSTRUCTION ACTIVITIES.
13. CONTRACTOR SHALL ASSURE POSITIVE DRAINAGE AWAY FROM BUILDINGS FOR ALL NATURAL AND PAVED AREAS.
14. ALL UNSURFACED AREAS DISTURBED BY GRADING OPERATION SHALL RECEIVE SIX INCHES (6") OF TOPSOIL. CONTRACTOR SHALL SEED DISTURBED AREAS IN ACCORDANCE WITH LANDSCAPE & CIVIL SPECIFICATIONS & DRAWINGS UNTIL A HEALTHY STAND OF GRASS IS OBTAINED.
15. CONTRACTOR SHALL APPLY STABILIZATION FABRIC TO ALL SLOPES STEEPER THAN 3H:1V.
16. ALL DRAINAGE SYSTEM COMPONENTS SHALL CONFORM TO LOCAL REQUIREMENTS.

UTILITY NOTES:

1. THE LATEST STANDARDS OF THE TOWN OF HINGHAM SHALL BE FOLLOWED WHEN INSTALLING ANY SANITARY SEWER AND STORM DRAIN WORK. BOTH SEWER AND STORM DRAIN WORK WILL BE INSPECTED BY TOWN OF HINGHAM PERSONNEL AND ALL COSTS SHALL BE THE RESPONSIBILITY OF THE CONTRACTOR.
2. THE LATEST STANDARDS OF THE TOWN OF HINGHAM SHALL BE FOLLOWED WHEN INSTALLING ANY WATER LINE WORK. WATER LINE WORK WILL BE INSPECTED BY TOWN OF HINGHAM PERSONNEL AND ALL COSTS SHALL INCLUDE PRESSURE TESTING, DISINFECTING, AND FLUSHING OF LINES. INSPECTION COSTS SHALL BE THE RESPONSIBILITY OF THE CONTRACTOR. THE CONTRACTOR SHALL BE RESPONSIBLE FOR INSTALLATION AND REMOVAL OF ALL NECESSARY DISINFECTING AND FLUSHING TAPS AS DIRECTED BY THE TOWN.
3. THE CONTRACTOR SHALL REFER TO ARCHITECTURAL & PLUMBING DRAWINGS AND SPECIFICATIONS FOR ACTUAL LOCATION OF ALL ROOF DRAIN LATERALS AND UTILITY ENTRANCES TO INCLUDE SANITARY SEWER LATERALS, DOMESTIC AND FIRE PROTECTION WATER SERVICE, ELECTRIC, TELEPHONE, AND NATURAL GAS SERVICE. THE CONTRACTOR SHALL COORDINATE INSTALLATION OF UTILITIES IN SUCH A MANNER AS TO AVOID CONFLICTS AND COORDINATE WITH THE PROPER AGENCY THE LOCATION AND SCHEDULING OF CONNECTIONS WITH THEIR FACILITIES.
4. WHERE AN EXISTING UTILITY IS FOUND TO CONFLICT WITH THE PROPOSED WORK, THE LOCATION, ELEVATION AND SIZE OF THE UTILITY SHALL BE ACCURATELY DETERMINED WITHOUT DELAY BY THE CONTRACTOR, AND THE INFORMATION FURNISHED TO THE ENGINEER FOR RESOLUTION.
5. ABANDONED EXISTING UTILITIES AND UTILITIES TO BE ABANDONED SHALL EITHER BE ABANDONED IN PLACE AS NOTED OR SHALL BE REMOVED AND DISPOSED OF AS SPECIFIED. ANY UTILITIES 4" OR LARGER ARE TO BE REMOVED. ALL UTILITIES SCHEDULED FOR ABANDONMENT OR REMOVAL AND DISPOSAL MUST BE COORDINATED BY THE CONTRACTOR WITH THE RESPECTIVE UTILITY OWNER. WHEN ABANDONED UTILITIES ARE TO BE LEFT IN PLACE, PLUG OR CAP THE ENDS OF THE CONDUITS AND PIPES. REMOVE ABANDONED UTILITY MANHOLES, JUNCTION BOXES AND SIMILAR STRUCTURES TO A MINIMUM DEPTH OF 4 FEET BELOW FINISHED GRADE AND PUNCTURE OR BREAK THE BOTTOM SLABS OF MANHOLES AND SIMILAR STRUCTURE TO ALLOW DRAINAGE. BACKFILL AND COMPACT EXCAVATIONS RESULTING FROM REMOVAL OF UTILITY FACILITATES, AS REQUIRED TO RESTORE THE ORIGINAL GRADE.
6. THE CONTRACTOR SHALL MAKE ARRANGEMENTS FOR THE ALTERATION AND ADJUSTMENTS OF NATURAL GAS, ELECTRIC, TELEPHONE AND ANY OTHER UTILITY BY THE UTILITY OWNER.
7. THE CONTRACTOR SHALL USE THE FOLLOWING PIPE MATERIALS:
   - SEWER – PVC (POLYVINYL CHLORIDE), SDR 35
     – C.I. (CAST IRON)
   - DRAIN – HDPE (HIGH DENSITY CORRUGATED POLYETHYLENE PIPE WITH SMOOTH INNER WALL), ASTM D2321 (UNLESS OTHERWISE SPECIFIED ON PLAN
   - WATER – C.L.D.I. (CEMENT LINED DUCTILE IRON)
8. REFER TO DEMOLITION PLAN FOR EXISTING DRAINAGE STRUCTURES TO BE REMOVED AND UTILITY ABANDONMENT.
9. BEFORE UTILITY WORK BEGINS, THE CONTRACTOR WILL COORDINATE THE APPROPRIATE PERMIT AND INSPECTION FEES WITH THE TOWN OF HINGHAM.
10. ALL WATER GATES TO PROPOSED HYDRANTS ARE 6" DIAMETER UNLESS NOTED.
11. A MINIMUM OF 10 FEET CLEAR HORIZONTALLY SHALL BE MAINTAINED BETWEEN WATER MAINS AND SANITARY SEWER MAINS AND/OR STORM DRAINS. WHENEVER CONDITIONS PREVENT A LATERAL SEPARATION OF 10 FEET TO A WATER MAIN, THE WATER MAIN SHALL BE LAID IN A SEPARATE TRENCH AND THE DIFFERENCE IN ELEVATION BETWEEN THE WATER MAIN AND THE SEWER MAIN SHALL BE AT LEAST 18 INCHES.
12. ALL FILL MATERIAL IS TO BE IN PLACE, AND COMPACTED BEFORE INSTALLATION OF PROPOSED UTILITIES.
13. CONTRACTOR SHALL NOTIFY THE UTILITY AUTHORITY'S INSPECTORS 72 HOURS BEFORE CONNECTING TO ANY EXISTING LINE.
14. MINIMUM TRENCH WIDTH SHALL BE 2 FEET.
15. CONTRACTOR SHALL MAINTAIN A MINIMUM OF 5'-0" COVER ON ALL WATERLINES AND A MAXIMUM OF 8'-0" COVER.
16. IN THE EVENT OF A VERTICAL CONFLICT BETWEEN WATERLINES, SANITARY LINES, STORM LINES AND GAS LINES (EXISTING AND PROPOSED), THE SANITARY LINE SHALL BE DUCTILE IRON PIPE WITH MECHANICAL JOINTS AT LEAST 10 FEET ON BOTH SIDES OF CROSSING, THE WATERLINE SHALL HAVE MECHANICAL JOINTS WITH APPROPRIATE THRUST BLOCKING AS REQUIRED TO PROVIDE A MINIMUM OF 18" CLEARANCE BETWEEN THE PIPES. WHERE THE WATERLINE IS LESS THAN THE 18" VERTICAL CLEARANCE AND MEETING 10' HORIZONTAL CLEARANCE CANNOT BE MET, THE WATER MUST BE ENCASED IN CONCRETE TO MEET THE REQUIREMENTS OF ANSI A21.10 OR ANSI 21.11 (AWWA C-151) (CLASS 50).
17. ALL CONCRETE FOR ENCASEMENTS SHALL HAVE A MINIMUM 28 DAY COMPRESSION STRENGTH OF 3000 P.S.I.
18. CONTRACTOR IS RESPONSIBLE FOR COMPLYING WITH THE SPECIFICATIONS OF THE LOCAL AUTHORITIES WITH REGARDS TO MATERIALS AND INSTALLATION OF THE WATER, SEWER, GAS AND ELECTRICAL AND TELECOMMUNICATIONS LINES.
19. ALL NECESSARY INSPECTIONS AND/OR CERTIFICATIONS REQUIRED BY CODES AND/OR UTILITY SERVICE COMPANIES SHALL BE PERFORMED PRIOR TO ANNOUNCED BUILDING POSSESSION AND THE FINAL CONNECTION OF SERVICE.
20. ALL HYDRANTS SHALL MEET LOCAL MUNICIPAL SPECIFICATION REQUIREMENTS AND SHALL BE INSTALLED IN ACCORDANCE WITH THE TOWN OF HINGHAM REQUIREMENTS.
21. DOMESTIC WATER SERVICES SHALL BE INSTALLED WITH APPROPRIATELY SIZED GATE, BOX, AND TEE FITTINGS.
22. ALL WATER MAIN APPURTENANCES, MATERIALS, METHODS OF INSTALLATION AND TESTING REQUIREMENTS SHALL MEET OR EXCEED THE TOWN OF HINGHAM REQUIREMENTS.
23. PRESSURE AND LEAKAGE TEST, DISINFECTION AND FLUSHING SHALL BE IN ACCORDANCE WITH ALL LOCAL AND MUNICIPAL STANDARDS AND REQUIREMENTS.
24. CONTRACTOR SHALL BE RESPONSIBLE FOR ALL COSTS IN CONNECTION WITH THE UTILITY TESTS, FLUSHING AND INSPECTIONS AS REQUIRED BY THE LOCAL MUNICIPALITY.
25. SEWER PIPE BEDDING MATERIAL SHALL BE AS SPECIFIED ON THE DRAWINGS. IF LOCAL OR STATE AUTHORITIES REQUIRE DIFFERENT BEDDING OR BACKFILL MATERIAL, THEN THE MORE STRINGENT SHALL APPLY.
26. DRAWINGS DO NOT NECESSARILY SHOW ALL EXISTING UTILITIES.

N:\PROJECTS\2118-02\CIVIL\DRAWINGS\CURRENT\C-2118-02 – ABBREVIATIONS & NOTES.DWG

TOWN OF HINGHAM LIST OF WAIVERS:

SECTION III-A-1.5 – SCHEDULE OF USES
- WAIVER OF THE PROHIBITION OF MULTI-FAMILY DWELLINGS IN THE OFFICE PARK DISTRICT.

SECTION IV-A – SCHEDULE OF DIMENSIONAL REQUIREMENTS
- WAIVER TO ALLOW FOR A MAXIMUM BUILDING HEIGHT OF 35 FEET (50.33'±).
- WAIVER TO ALLOW FOR A MAXIMUM FLOOR AREA RATIO OF 0.15 (0.60).
- WAIVER TO ALLOW FOR A MINIMUM FRONT YARD SETBACK OF 100 FEET (85.5 FEET).

SECTION IV-B-5 – SPECIAL REQUIREMENTS TO SCHEDULE OF DIMENSIONAL REQUIREMENTS
- WAIVER FOR A MINIMUM OF 20 FEET OF GREEN SPACE AROUND THE PERIMETER OF THE PROPERTY.

SECTION IV-B-6
- WAIVER TO ALLOW SITE PLAN REVIEW TO BE PERFORMED BY THE PLANNING BOARD.

SECTION IV-C-4 – GENERAL INTENSITY PROVISIONS
- WAIVER TO ALLOW MORE THAN ONE DWELLING UNIT PER ANY SINGLE LOT (200).

SECTION IV-E-1B – RESIDENTIAL MULTI-UNIT DEVELOPMENT
- WAIVER TO ALLOW THE NUMBER OF DWELLING UNITS PER ACRE TO BE MORE THAN 8 (18.2 UNITS/ACRE)

SECTION IV-E-1D
- WAIVER FROM PROVIDING 2000 S.F. OF LANDSCAPED SPACE PER DWELLING UNIT.

SECTION IV-E-1E
- WAIVER FROM PROVIDING 300 S.F. OF RECREATIONAL SPACE PER DWELLING UNIT.

SECTION IV-E-1F
- WAIVER FROM PROVIDING 50 FEET OF LANDSCAPED BUFFER ADJACENT TO EACH PROPERTY LINE.

SECTION IV-E-1G
- WAIVER FROM PROVIDING 300 S.F. OF RECREATIONAL SPACE PER DWELLING UNIT.

SECTION IV-E-1I
- WAIVER ALLOWING LESS THAN TWO PARKING SPACES PER DWELLING UNIT (1.55 STALLS/UNIT).

SECTION IV-E-5E
- WAIVER TO DEFER TO CURRENT DHCD LOCAL PREFERENCE CATEGORIES.

SECTION V-A-2 – OFF-STREET PARKING REQUIREMENTS
- WAIVER FROM A MINIMUM OF 2.0 PARKING STALLS PER UNIT (1.55 STALLS/UNIT).

SECTION V-A-3 – OFF-STREET PARKING REQUIREMENTS
- WAIVER FROM MINIMUM AISLE WIDTH FOR A PARKING STALL WITH NO OVERHANG

SECTION V-C-1A – EARTH REMOVAL REGULATIONS
- WAIVER ALLOWING THE REMOVAL OF SOIL, LOAM, SAND, GRAVEL, ETC. TO BE REMOVED FROM A LOT.

ARTICLE 10 – PUBLIC WAYS AND COMMON LAND
- WAIVER TO HAVE THE ZONING BOARD OF APPEALS BE THE PERMIT ISSUING AUTHORITY INSTEAD OF THE BOARD OF SELECTMEN.

ARTICLE 10-34A
- WAIVER ALLOWING SOIL, LOAM, SAND, OR GRAVEL FROM LAND IN TOWN NOT IN PUBLIC USE TO ANY LOCATIONS OUTSIDE OF THE TOWN.

ARTICLE 22-5
- WAIVER FROM THE CONSERVATION COMMISSION HAVING THE AUTHORIZATION TO DENY THE PROJECT

ARTICLE 22-8
- WAIVER REQUESTED AS A BOND IS ALREADY REQUIRED OF THE APPLICANT AS PART OF THE 40B PROCESS.

COMMONWEALTH OF MASSACHUSETTS
CARLTON M. QUINN
CIVIL
No.49923
REGISTERED PROFESSIONAL ENGINEER

PROFESSIONAL ENGINEER FOR
ALLEN & MAJOR ASSOCIATES, INC.

REV	DATE	DESCRIPTION
3.	01/04/2017	ISSUED FOR ZBA RESUBMITTAL
2.	11/2/2016	ISSUED FOR ZBA RESUBMITTAL
1.	10/25/2016	ISSUED FOR ZBA RESUBMITTAL

APPLICANT\OWNER:
BROADSTONE BARE COVE ALLIANCE, LLC. C/O
ALLIANCE RESIDENTIAL COMPANY
184 HIGH STREET, SUITE 401
BOSTON, MA 02110

PROJECT:
BROADSTONE BARE COVE
230 BEAL STREET
HINGHAM, MA

PROJECT NO.	2118-02	DATE:	08-12-2016
SCALE:	N/A	DWG. NAME:	C2118-02
DESIGNED BY:	SJL	CHECKED BY:	CMQ

PREPARED BY:
ALLEN & MAJOR ASSOCIATES, INC.
civil & structural engineering ◆ land surveying
environmental consulting ◆ landscape architecture
www.allenmajor.com
100 COMMERCE WAY
P.O. BOX 2118
WOBURN MA 01888-0118
TEL: (781) 935-6889
FAX: (781) 935-2896
WOBURN, MA ◆ LAKEVILLE, MA ◆ MANCHESTER, NH

THIS DRAWING HAS BEEN PREPARED IN ELECTRONIC FORMAT. CLIENT/CLIENT'S REPRESENTATIVE OR CONSULTANT MAY BE PROVIDED COPIES OF DRAWINGS AND SPECIFICATIONS ON MAGNETIC MEDIA FOR HIS/HER INFORMATION AND USE FOR SPECIFIC APPLICATION TO THIS PROJECT. DUE TO THE POTENTIAL THAT THE MAGNETIC INFORMATION MAY BE MODIFIED UNINTENTIONALLY OR OTHERWISE, ALLEN & MAJOR ASSOCIATES, INC. MAY REMOVE ALL INDICATION OF THE DOCUMENT'S AUTHORSHIP ON THE MAGNETIC MEDIA. PRINTED REPRESENTATIONS OF THE DRAWINGS AND SPECIFICATIONS ISSUED SHALL BE THE ONLY RECORD COPIES OF ALLEN & MAJOR ASSOCIATES, INC.'S WORK PRODUCT.

DRAWING TITLE: ABBREVIATIONS & NOTES

SHEET No. ABB-1

Copyright©2017 Allen & Major Associates, Inc.
All Rights Reserved

EROSION & SEDIMENTATION CONTROL NOTES:

1. EROSION CONTROL SHALL BE INSTALLED PRIOR TO CONSTRUCTION AND SHALL BE ADEQUATE TO MAINTAIN SEDIMENT ON SITE. ANY MODIFICATIONS TO SILT CONTROLS SHOWN ON THE APPROVED PLANS AS A RESULT OF ACTUAL FIELD CONDITIONS OR CONSTRUCTION PRACTICES SHALL BE INSTALLED IN ACCORDANCE WITH B.M.P. (BEST MANAGEMENT PRACTICES) PER THE E.P.A. 2008 "CONSTRUCTION GENERAL PERMIT" MANUAL, AND MASSACHUSETTS 2003 EROSION & SEDIMENT CONTROL GUIDELINES FOR URBAN AND SUBURBAN AREAS, ANY SUCH MODIFICATIONS FROM THE ABOVE MANUALS SHALL BE INSTALLED AS APPROVED BY THE ENGINEER OR THE TOWN OF HINGHAM.

2. AREAS OF EXPOSED SOIL UNDERGOING CONSTRUCTION THAT WILL NOT BE COVERED AND OR FINISHED GRADED SHALL BE STABILIZED AS SOON AS PRACTICABLE BUT IN NO CASE MORE THAN 14 DAYS AFTER THE CONSTRUCTION ACTIVITY (UNLESS TOWN HAS STRICTER REQUIREMENTS WHICH SHALL BE FOLLOWED) IN THAT PORTION OF THE SITE HAS TEMPORARILY OR PERMANENTLY CEASED. TEMPORARY EROSION CONTROL MEASURES SHALL INCLUDE EROSION CONTROL MESH, NETTING OR MULCH AS DIRECTED BY THE OWNER'S REPRESENTATIVE AND SHOWN ON THE DESIGN PLANS. IF MULCH IS USED, STRAW MULCH SHALL BE APPLIED AT THE RATE OF 4 BALES PER 1,000 SQUARE FEET. APPLICATION AREA SHALL BE SUFFICIENTLY COVERED WITH MULCH TO AVOID ANY VISIBLE SOIL EXPOSURE. MULCH SHALL BE KEPT MOIST TO AVOID LOSS DUE TO WIND. MULCH AND NETTING SHALL BE APPLIED IN THE BASE OF ALL GRASSED WATERWAYS, IN VEGETATIVE SLOPES WHICH EXCEED 15% AND DISTURBED AREAS WITHIN 100 FEET OF WETLANDS OR STREAMS.

3. IF DISTURBED AREAS DO NOT RECEIVE FINAL SEEDING BY OCTOBER 1ST OF THE CONSTRUCTION YEAR, THEN ALL DISTURBED AREAS SHALL BE SEEDED WITH A WINTER COVER CROP AT THE RATE OF 3 LBS PER 1,000 SQUARE FEET. WINTER SEEDING SHALL BE COVERED WITH EROSION CONTROL MESH (MULCH AND NETTING). HEAVY GRADE MATS SHALL BE USED IN THE BASE OF ALL GRASSED WATERWAYS ON VEGETATED SLOPES IN EXCESS OF 15%, AND ANY DISTURBED AREAS WITHIN 100 FEET OF WETLANDS OR STREAMS. MULCH AND NETTING SHALL ALSO BE PROVIDED FOR ADDITIONAL WINTER PROTECTION.

4. ALL TOPSOIL SHALL BE COLLECTED, STOCKPILED, SEEDED WITH RYE AT 3LBS PER 1,000 SQUARE FOOT AND MULCHED, AND REUSED AS REQUIRED. SILTATION FENCING SHALL BE PLACED DOWN GRADIENT FROM STOCKPILED LOAM. LOAM SHALL BE STOCKPILED AT LOCATIONS DESIGNATED BY THE OWNER AND ENGINEER.

5. ALL FILTER BARRIERS, SILT SACKS, AND EROSION CONTROL BERMS SHALL BE INSTALLED ACCORDING TO THE EROSION CONTROL PLAN. THESE SHALL BE MAINTAINED DURING DEVELOPMENT TO REMOVE SEDIMENT FROM RUNOFF WATER. ALL THE FILTER BARRIERS AND EROSION CONTROL BERMS SHALL BE INSPECTED AFTER ANY RAINFALL OR RUNOFF EVENT, MAINTAINED AND CLEANED UNTIL ALL AREAS HAVE AT LEAST 85–90% VIGOROUS PERENNIAL COVER OF GRASSES.

6. ADJACENT ROADS SHALL BE PERIODICALLY SWEPT OR WASHED TO AVOID TRACKING MUD, DUST OR DEBRIS FROM THE CONSTRUCTION AREA AS OFTEN AS NECESSARY (WHICH COULD BE ON A DAILY BASIS) TO REMOVE ANY SOIL OR SEDIMENTS AT NO ADDITIONAL COST TO THE OWNER. A WATERING TRUCK WILL BE USED TO PERIODICALLY SPRINKLE CONSTRUCTION AREAS IN ORDER TO KEEP THE LEVEL OF DUST TO A MINIMUM DURING THE DRY MONTHS AT NO ADDITIONAL COST TO THE OWNER.

7. THE CONTRACTOR SHALL USE EXTREME CAUTION TO AVOID ALLOWING SEDIMENTS TO ENTER THE STORM DRAIN SYSTEM DURING CONSTRUCTION. BOTH EXISTING AND PROPOSED CATCH BASIN INLETS SHALL BE PROTECTED DURING CONSTRUCTION BY THE USE SILT SACKS AND OR STRAW BALE BARRIERS AROUND EACH INLET AS NOTED ON THE PLANS. INLET PROTECTION MAY BE REMOVED ONLY AFTER FINISHED AREAS ARE PAVED AND THE VEGETATED SLOPES ARE ESTABLISHED WITH AT LEAST 85–90% OF VIGOROUS PERENNIAL GROWTH.

8. AS APPLICABLE, EROSION CONTROL MESH SHALL BE APPLIED IN ACCORDANCE WITH THE PLANS OVER ALL FINISHED SEEDED AREAS AS SPECIFIED ON THE DESIGN PLANS.

9. AT A MINIMUM, ALL STRAW BALES, SILT FENCE AND FILTER FABRIC SHALL REMAIN IN PLACE UNTIL SEEDINGS OR PLANTINGS HAVE BECOME 85–90% ESTABLISHED. THE TOWN OF HINGHAM OR THE ENGINEER MUST APPROVE THE REMOVAL OR RELOCATION OF ANY OF THE STRAW BALES AND FILTER FABRIC. ONCE THE STRAWBALES AND SILT FENCE IS REMOVED THE AREAS ARE TO BE LOAM AND SEEDED TO ACHIEVE FULL STABILIZATION.

10. AT THE OWNER'S DISCRETION ADDITIONAL EROSION CONTROL MEASURES MAY BE REQUIRED TO MAINTAIN STABILITY OF EARTHWORKS AND FINISHED GRADED AREAS. THE CONTRACTOR, AT HIS EXPENSE, WILL BE RESPONSIBLE FOR PROVIDING AND INSTALLING ANY ADDITIONAL MEASURES AS SPECIFIED BY THE OWNER. THIS INCLUDES BUT IS NOT LIMITED TO REQUESTS BY MA DEP. THE ENGINEER AND THE MUNICIPALITY, AS AUTHORIZED BY THE OWNER. FAILURE TO COMPLY WITH THE OWNER'S DIRECTIONS WILL RESULT IN DISCONTINUATION OF CONSTRUCTION ACTIVITIES.

11. INSPECTIONS AND MONITORING MAINTENANCE MEASURES SHALL BE APPLIED AS NEEDED DURING THE ENTIRE CONSTRUCTION CYCLE. WEEKLY INSPECTIONS SHALL BE HELD THROUGH THE DURATION OF CONSTRUCTION ACTIVITY. WEEKLY INSPECTION REPORTS SHALL BE MAINTAINED BY THE CONTRACTOR AND LOCATED IN THE CONTRACTORS FIELD OFFICE ONSITE. IN ADDITION TO THE NORMAL WEEKLY INSPECTIONS, THE CONTRACTOR SHALL PERFORM AN INSPECTION OF ALL EROSION CONTROL MEASURES AFTER EACH RAINFALL OR RUNOFF EVENT, AND PERFORM THE NECESSARY REPAIRS. THE INSPECTIONS SHALL INCLUDE BUT NOT BE LIMITED TO THE SITE'S DOWN STREAM DISCHARGE POINTS.

12. IF ANY EVIDENCE OF SEDIMENTATION IS OBSERVED AT THE STORMWATER MANAGEMENT AREA INLETS, THE CONTRACTOR SHALL, AT HIS OWN EXPENSE, PROVIDE A PLAN TO THE ENGINEER TO REMOVE ANY ACCUMULATED SEDIMENT IN THESE AREAS. THE CONTRACTOR SHALL ALSO IMMEDIATELY PROVIDE ADDITIONAL ON SITE EROSION AND SEDIMENTATION CONTROL MEASURES TO PREVENT FURTHER DEGRADATION OF THE AREA.

13. FOLLOWING THE TEMPORARY OR FINAL SEEDINGS, THE CONTRACTOR SHALL INSPECT THE WORK AREA SEMI–MONTHLY TO ENSURE THE AREAS HAVE A MINIMUM OF 85–90% VEGETATED VIGOROUS GROWTH. RE–SEEDING SHALL BE CARRIED OUT BY THE CONTRACTOR WITH FOLLOW UP INSPECTIONS IN THE EVENT OF ANY FAILURES UNTIL VEGETATION IS ADEQUATELY ESTABLISHED.

14. CONTRACTOR & ALL SITE SUBCONTRACTORS SHALL BE FAMILIAR WITH & FOLLOW ALL APPROVED PERMITS AND CONDITIONS. CONTRACTOR SHALL MAINTAIN A COPY OF ALL APPROVED PERMITS ONSITE, INCLUDING THE ORDER OF CONDITIONS FROM THE HINGHAM ZONING BOARD OF APPEALS. ALL CONDITIONS & RECOMMENDATIONS WITHIN THE APPROVED PERMITS SHALL BE COMPLETED.

16. EROSION AND SEDIMENTATION CONTROL MEASURES SHALL BE MAINTAINED DURING CONSTRUCTION, AND SHALL REMAIN IN PLACE UNTIL ALL SITE WORK IS COMPLETE AND GROUND COVER IS ESTABLISHED.

17. TOP OF STOCKPILES SHALL BE COVERED IN SUCH MANNER THAT STORMWATER DOES NOT INFILTRATE THE MATERIALS AND THEREBY RENDER THE SAME UNSUITABLE FOR FILL USE.

DIG SAFE

BEFORE YOU DIG
CALL 811 OR
1–888–DIG–SAFE
1–888–344–7233

EROSION & SEDIMENTATION CONTROL NOTES (CONTINUED):

18. ALL DISTURBED OR EXPOSED AREAS SUBJECT TO EROSION SHALL BE STABILIZED WITH MULCH OR SEEDED FOR TEMPORARY VEGETATIVE COVER. NO AREA, SUBJECT TO EROSION SHALL BE LEFT DISTURBED AND UNSTABILIZED FOR PERIODS LONGER THAN IS ABSOLUTELY NECESSARY TO CARRY OUT THAT PORTION OF THE CONSTRUCTION WORK OR SIX MONTHS AFTER SOIL HAS BEEN DISTURBED WHICHEVER IS LESS.

19. CULVERT/PIPE INLETS AND OUTFALLS SHALL BE PROTECTED BY STRAW BALE FILTERS AND STONE CHECK DAMS UNTIL DISTURBED AREAS ARE PERMANENTLY STABILIZED.

20. STRAW BALE DIKES SHALL BE CONSTRUCTED AT ALL EXISTING & PROPOSED CATCH BASINS. NO SEDIMENTATION SHALL ENTER THE ON–SITE OR OFF–SITE DRAINAGE SYSTEMS AT ANY TIME.

21. ALL EROSION CONTROL MEASURES SHALL BE ROUTINELY INSPECTED, CLEANED AND REPAIRED OR REPLACED AS NECESSARY THROUGHOUT ALL PHASES OF CONSTRUCTION. IN ADDITION, INSPECTION SHALL TAKE PLACE WEEKLY AND BEFORE AND AFTER EACH RAINFALL EVENT.

22. ALL PROPOSED SLOPES STEEPER THAN 3:1 SHALL BE STABILIZED WITH JUTE MESH AND PROTECTED FROM EROSION UNTIL WORK IS COMPLETE AND GROUND COVER IS ESTABLISHED.

23. THE CONTRACTOR SHALL KEEP ON SITE AT ALL TIMES ADDITIONAL STRAW BALES AND EXTRA SILTATION FENCING FOR INSTALLATION AT THE DIRECTION OF THE ENGINEER OR THE TOWN ENGINEER TO MITIGATE ANY EMERGENCY CONDITION.

24. AS CONSTRUCTION DISTURBANCE IS GREATER THAN 1 ACRE, A NATIONAL POLLUTANT DISCHARGE ELIMINATION SYSTEM (NPDES) CONSTRUCTION GENERAL PERMIT NOI, AND STORM WATER POLLUTION PREVENTION PLAN (SWPPP) WILL NEED TO BE SUBMITTED TO THE EPA. THE NPDES PERMIT FOR STORM WATER DISCHARGE, & CONSTRUCTION GENERAL PERMIT NOI WILL BE REQUIRED TO BE SUBMITTED AT LEAST 14 DAYS PRIOR TO COMMENCING CONSTRUCTION BY THE CONTRACTOR.

25. OWNER AND CONTRACTOR ARE RESPONSIBLE FOR COMPLIANCE WITH THE CONSTRUCTION GENERAL PERMIT NOI. WEEKLY SWPPP INSPECTION REPORTS TO BE PERFORMED BY CONTRACTOR. COPIES OF ALL SWPPP INSPECTION REPORTS SHALL BE PROVIDED TO THE TOWN OF HINGHAM, EPA, DEP, OR ANY OTHER AUTHORITY REQUESTING WITHIN 3 DAYS OF EACH INSPECTION.

26. APPLICABLE WORK AND MATERIALS SHALL COMPLY WITH ALL TOWN OF HINGHAM, MA DEP, EPA CONSTRUCTION GENERAL PERMIT STANDARDS. ALL CONSTRUCTION SHALL CONFORM TO THE APPLICABLE SITE PLAN REGULATIONS FROM THE TOWN OF HINGHAM AND USDA SOIL CONSERVATION SERVICE VEGETATIVE PRACTICES IN SITE DEVELOPMENT.

27. A WATERING TRUCK SHALL BE USED TO PERIODICALLY SPRINKLE CONSTRUCTION AREAS IN ORDER TO KEEP THE LEVEL OF DUST TO A MINIMUM DURING THE DRY MONTHS AND AS REQUIRED.

28. IF DEWATERING IS NECESSARY IT SHALL ONLY BE COMPLETED AS FOLLOWS: THE DISCHARGE SHALL BE STOPPED IMMEDIATELY IF THE RECEIVING AREA SHOWS ANY SIGN OF INSTABILITY OR EROSION. ALL CHANNELS, SWALES, AND DITCHES DUG FOR DISCHARGING WATER FROM THE EXCAVATED AREA SHALL BE STABLE PRIOR TO DIRECTING DISCHARGE TO THEM. IF A CONSTRUCTION EQUIPMENT BUCKET IS USED, IT SHALL EMPTY THE MATERIAL TO A STABLE AREA. NO DEWATERING SHALL OCCUR DURING PERIODS OF INTENSE, HEAVY RAIN. FLOW TO THE SEDIMENT REMOVAL STRUCTURE SHALL NOT EXCEED THE STRUCTURES CAPACITY TO SETTLE AND FILTER FLOW OR IS VOLUME CAPACITY. WHENEVER POSSIBLE, THE DISCHARGE FROM THE SEDIMENT REMOVAL STRUCTURE SHALL DRAIN TO A WELL–VEGETATED BUFFER BY SHEET FLOW WHILE MAXIMIZING THE DISTANCE TO THE NEAREST WATER RESOURCE AND MINIMIZING THE SLOPE OF THE BUFFER AREA. THERE SHALL BE NO DIRECT DISCHARGE TO EXISTING WETLANDS OR STREAMS. ALL DISCHARGE SHALL BE IN COMPLIANCE WITH STATE, LOCAL, AND FEDERAL REQUIREMENTS.

29. INITIATE STABILIZATION OF EXPOSED AREAS IMMEDIATELY IF CONSTRUCTION WORK TEMPORARILY OR PERMANENTLY CEASES.

30. ALL DISCHARGES FROM POLLUTION SOURCES ARE PROHIBITED ONSITE SUCH AS FUELS, WASTEWATER FROM WASH OUT OF CONCRETE, WASTEWATER FROM CLEAN OUT OF PAINTS, FORM RELEASE OILS, SOLVENTS, ADHESIVES, CURING COMPOUNDS, POLLUTANTS USED FOR MAINTENANCE OF VEHICLES AND EQUIPMENT, SOAPS & SOLVENTS, TOXIC OR HAZARDOUS SUBSTANCES, CHEMICALS AND OILS. IF A POLLUTANT IS DISCHARGED IT NEEDS TO BE IMMEDIATELY CLEANED UP BY REMOVING THE CHEMICAL AND AFFECTED SOIL OR AREA OF SPILL FROM THE SITE IN ACCORDANCE WITH BOTH THE MANUFACTURER RECOMMENDATIONS, FEDERAL, STATE, AND LOCAL REQUIREMENTS. DO NOT HOSE DOWN AND SPREAD SPILLED ITEM. ALL CHEMICALS USED ON THE SITE SHALL BE IN LEAK–PROOF CONTAINERS STORED AWAY FROM WETLANDS, SURFACE WATERS, STORMWATER INLETS, AND DRAINAGE MEASURES. SPILL KITS SHALL BE AVAILABLE ONSITE FOR EMERGENCY USE. THERE SHALL BE A SECONDARY CONTAINMENT MEASURE OF ALL CHEMICALS IN ADDITION TO SPILL–PROOF CONTAINERS.

31. PRIOR TO COMMENCEMENT OF CONSTRUCTION, APPLICABLE CONTRACTOR PERSONNEL MUST HAVE AN UNDERSTANDING OF THE EPA CONSTRUCTION GENERAL PERMIT REQUIREMENTS AND THEIR SPECIFIC RESPONSIBILITIES UNDER THE PERMIT. AT A MINIMUM, PERSONNEL MUST BE TRAINED AND UNDERSTAND THE FOLLOWING: LOCATION OF ALL STORMWATER CONTROLS AND HOW TO MAINTAIN THEM, PROCEDURES FOR COMPLYING WITH THE POLLUTION PREVENTION REQUIREMENTS, PROCEDURES FOR CONDUCTING INSPECTIONS, RECORDING FINDINGS, AND TAKING CORRECTIVE ACTION.

32. ALL SEDIMENT TRACKED ONTO ROADWAYS MUST BE REMOVED AT END OF EACH WORK DAY.

33. ALL USE OF CATIONIC TREATMENT CHEMICALS (EXAMPLES INCLUDE POLYMERS, CHITOSAN, CATIONIC PAM, FLOCCULANTS OR OTHER CHEMICAL UTILIZED FOR STABILIZATION) ARE PROHIBITED. IF ALL OTHER AVAILABLE STABILIZATION MEASURES ARE NOT POSSIBLE AND USE OF CATIONIC CHEMICALS IS ABSOLUTELY NECESSARY THE CONTRACTOR WILL NEED TO CONTACT THE EPA NEW ENGLAND OFFICE IN WRITING FOR APPROVAL AND SPECIFIC REQUIREMENTS (MAXIMUM DOSAGE RATE, RESIDUAL TESTING, SPECIFIC LIMITATIONS, ETC) PRIOR TO USE.

34. IF USING NON–VEGETATIVE STABILIZATION MEASURES, IT MUST BE COMPLETED NO LATER THAN 14 DAYS AFTER INITIATING STABILIZATION. ALL AREAS OF EXPOSED SOILS MUST BE COVERED.

35. INSPECTIONS OF EROSION CONTROL MEASURES SHALL BE AT LEAST ONCE EVERY 7 DAYS BY THE CONTRACTOR. AT A MINIMUM INSPECTIONS SHALL INCLUDE ALL DISTURBED AREAS, ALL STORMWATER CONTROLS AND POLLUTION PREVENTION MEASURES, ALL LOCATIONS WHERE STABILIZATION MEASURES HAVE BEEN IMPLEMENTED, EQUIPMENT AND MATERIAL STORAGE AREAS, ALL AREAS WHERE STORMWATER FLOWS AND ALL POINTS OF DISCHARGE. WHEN CORRECTIVE ACTIONS ARE REQUIRED, THE CONTRACTOR MUST IMMEDIATELY TAKE ALL STEPS TO PREVENT POLLUTANT DISCHARGES UNTIL A PERMANENT SOLUTION IS IMPLEMENTED. AS NECESSARY NEW OR MODIFIED CONTROLS MUST BE INSTALLED AND OPERATIONAL, THE REPAIR MUST BE COMPLETED WITHIN 7 DAYS FROM THE TIME OF DISCOVERY. WITHIN 24 HOURS OF A TRIGGERING CONDITION OCCURRING THAT REQUIRES A CORRECTIVE ACTION, A CORRECTIVE ACTION REPORT MUST BE COMPLETED.

MAINTENANCE:

ALL MEASURES STATED ON THE STORMWATER POLLUTION PREVENTION PLANS, SHALL BE MAINTAINED IN FULLY FUNCTIONAL CONDITION BY CONTRACTOR UNTIL NO LONGER REQUIRED FOR A COMPLETED PHASE OF WORK OR FINAL STABILIZATION OF THE SITE. ALL EROSION AND SEDIMENTATION CONTROL MEASURES SHALL BE CHECKED BY A QUALIFIED PERSON IN ACCORDANCE WITH THE CONTRACT DOCUMENTS OR THE APPLICABLE PERMIT, WHICHEVER IS MORE STRINGENT, AND REPAIRED IN ACCORDANCE WITH THE FOLLOWING:

1. INLET PROTECTION DEVICES AND BARRIERS SHALL BE REPAIRED OR REPLACED IF THEY SHOW SIGNS OF UNDERMINING, OR DETERIORATION.

2. ALL SEEDED AREAS SHALL BE CHECKED REGULARLY TO SEE THAT A HEALTHY STAND OF GRASS IS MAINTAINED. AREAS SHOULD BE FERTILIZED, WATERED, AND RESEEDED AS NEEDED.

3. ALL SEDIMENT CONTROLS SHALL BE REPAIRED TO THEIR ORIGINAL CONDITIONS IF DAMAGED. SEDIMENT SHALL BE REMOVED FROM THE TUBULAR SEDIMENT CONTROLS WHEN IT REACHES HALF THE HEIGHT OF THE CONTROL MEASURE OR AS REQUESTED BY THE OWNER OR ENGINEER.

4. THE CONSTRUCTION ENTRANCES SHALL BE MAINTAINED IN A CONDITION WHICH WILL PREVENT TRACKING OR FLOW OF MUD ONTO PUBLIC RIGHTS–OF–WAY. THIS MAY REQUIRE PERIODIC TOP DRESSING OF THE CONSTRUCTION ENTRANCES AS CONDITIONS DEMAND.

5. THE TEMPORARY PARKING AND STORAGE AREA SHALL BE KEPT IN GOOD CONDITION (SUITABLE FOR PARKING AND STORAGE). THIS MAY REQUIRE PERIODIC TOP DRESSING OF THE TEMPORARY PARKING AS CONDITIONS DEMAND.

6. OUTLET STRUCTURES IN THE SEDIMENTATION BASINS SHALL BE MAINTAINED IN OPERATIONAL CONDITIONS AT ALL TIMES. SEDIMENT SHALL BE REMOVED FROM SEDIMENT BASINS OR TRAPS WHEN THE DESIGN CAPACITY HAS BEEN REDUCED BY 50%.

ABBREVIATIONS:

ABAN	ABANDON
ADA	AMERICANS WITH DISABILITIES ACTS
ADJ	ADJUST
B	BORING
BC	BOTTOM OF CURB
BIT	BITUMINOUS
BLDG	BUILDING
BM	BENCH MARK
BOS	BOTTOM OF SLOPE
BOW	BOTTOM OF WALL
BV&B	BUTTERFLY VALVE & BOX
BVW	BORDERING VEGETATED WETLAND
CATV	CABLE TELEVISION
CB	CATCH BASIN
CF	CUBIC FEET
CFS	CUBIC FEET PER SECOND
CI	CAST IRON (PIPE)
CL	CENTERLINE
CLDI	CEMENT LINED DUCTILE IRON (PIPE)
CLF	CHAIN LINK FENCE
CMP	CORRUGATED METAL PIPE
CO	CLEAN OUT
CONC	CONCRETE
CONST	CONSTRUCTION
CONT	CONTRACTOR
CRD	COORDINATE
CUL	CULVERT
CY	CUBIC YARD
DB	DISTRIBUTION BOX
DBL	DOUBLE
DEM	DEMOLISH
DET	DETENTION
DIA	DIAMETER
DI	DUCTILE IRON (PIPE)
DIM	DIMENSION
DMH	DRAIN MANHOLE
DW	DOMESTIC WATER (OR DRY WELL)
DWG	DRAWING
DYCL	DOUBLE YELLOW CENTERLINE
EHH	ELECTRIC HANDHOLE
EL	ELEVATION
ELEC	ELECTRIC
EMH	ELECTRIC MANHOLE
EOP	EDGE OF PAVEMENT
EOR	EDGE OF ROAD
EOW	EDGE OF WETLANDS
ETC	ELECTRIC, TELEPHONE, CABLE
EXIST	EXISTING
EXT	EXTERIOR
FCC	FLUSH CONCRETE CURB
FES	FLARED END SECTION
FFE	FINISH FLOOR ELEVATION
FPS	FEET PER SECOND
FS	FIRE SERVICE
FT	FOOT/FEET
GC	GENERAL CONTRACTOR
GEN	GENERAL
GG	GAS GATE
GR	GUIDE RAIL
GRAN	GRANITE
GV	GATE VALVE
GV&B	GATE VALVE & BOX
GW	GROUND WATER
H	HORIZONTAL
HOR	HORIZONTAL
HT	HEIGHT
HW	HEADWALL
HWY	HIGHWAY
HYD	HYDRANT
ID	INSIDE DIAMETER
IN	INCHES
INCL	INCLUDE
INST	INSTALLED
INV, I.E.	INVERT, INVERT ELEVATION
L	LENGTH
LP	LIGHT POLE
MAT	MATERIAL
MAX	MAXIMUM
MH	MANHOLE
MIN	MINIMUM
MISC	MISCELLANEOUS
MTD	MOUNTED
MW	MONITORING WELL
N	NORTH
NIC	NOT IN CONTRACT
NO	NUMBER
NTS	NOT TO SCALE
OC	ON CENTER
OD	OUTSIDE DIAMETER
OHW	OVERHEAD WIRE
OVHD	OVERHEAD
OW	OBSERVATION WELL
PC	POINT OF CURVATURE
PCC	PRECAST CONCRETE CURB
PI	POINT OF INTERSECTION
PL	PROPERTY LINE
POC	POINT ON CURVATURE
POT	POINT ON TANGENT
PRC	POINT OF REVERSE CURVATURE
PROP, P	PROPOSED
PT	POINT (OR POINT OF TANGENT)
PVC	POLYVINYL CHLORIDE (PIPE)
R&R	REMOVE & RESET/REPLACE
R&S	REMOVE & STACK
RCP	REINFORCED CONCRETE PIPE
RD	ROAD (OR ROOF DRAIN)
RELOC	RELOCATE
REM	REMOVE
RET	RETAIN, RETAINING OR RETENTION
ROW	RIGHT OF WAY
RR	RAILROAD
RWY	ROADWAY
SD	SUBDRAIN
SF	SQUARE FEET
SGC	SLOPED GRANITE CURB
SMH	SEWER MANHOLE
SP	STANDPIPE
SPEC	SPECIFICATION
STA	STATION
STD	STANDARD
SWEL	SOLID WHITE EDGE LINE
SW	SIDEWALK
SWLL	SOLID WHITE LANE LINE
SYCL	SOLID YELLOW CENTERLINE
TB	TEST BORING
TC	TOP OF CURB
TD	TRENCH DRAIN
TEL, T	TELEPHONE
TMH	TELEPHONE MANHOLE
TOS	TOP OF SLOPE
TOW	TOP OF WALL
TP	TEST PIT
TYP	TYPICAL
UD	UNDERDRAIN
UP	UTILITY POLE
V	VERTICAL
VCP	VITRIFIED CLAY PIPE
VERT	VERTICAL
VGC	VERTICAL GRANITE CURB
WG	WATER GATE
WM	WATER MAIN
WMH	WATER MANHOLE
WSO	WATER SHUTOFF

CONSTRUCTION GENERAL PERMIT NOTES AND NARRATIVE:

NARRATIVE: THE STORMWATER POLLUTION PREVENTION PLANS CONSIST OF THE EROSION CONTROL PLANS TOGETHER WITH AN EXISTING CONDITIONS PLANS, GRADING PLANS, ABBREVIATIONS AND NOTES SHEETS, AND DETAIL SHEETS.

THE EROSION CONTROL PLAN WILL BE IMPLEMENTED TO:

A. TREAT EROSION AS SOON AS POSSIBLE AFTER DISTURBANCE.

B. PREVENT SEDIMENT FROM LEAVING THE CONSTRUCTION AREA AND ENTERING THE RECEIVING WATERS.

C. CONSTRUCTION ACTIVITIES SHALL BE SCHEDULED TO MINIMIZE EROSION.

D. ONLY DISTURB, CLEAR, OR GRADE AREAS NECESSARY FOR CONSTRUCTION.

N:\PROJECTS\2118–02\CIVIL\DRAWINGS\CURRENT\C–2118–02 – ABBREVIATIONS & NOTES.DWG

TOWN OF HINGHAM LIST OF WAIVERS:

SECTION III–A–1.5 – SCHEDULE OF USES
- WAIVER OF THE PROHIBITION OF MULTI–FAMILY DWELLINGS IN THE OFFICE PARK DISTRICT.

SECTION IV–A – SCHEDULE OF DIMENSIONAL REQUIREMENTS
- WAIVER TO ALLOW FOR A MAXIMUM BUILDING HEIGHT OF 35 FEET (50.33'±).
- WAIVER TO ALLOW FOR A MAXIMUM FLOOR AREA RATIO OF 0.15 (0.60).
- WAIVER TO ALLOW FOR A MINIMUM FRONT YARD SETBACK OF 100 FEET (85.5 FEET).

SECTION IV–B–5 – SPECIAL REQUIREMENTS TO SCHEDULE OF DIMENSIONAL REQUIREMENTS
- WAIVER FOR A MINIMUM OF 20 FEET OF GREEN SPACE AROUND THE PERIMETER OF THE PROPERTY.

SECTION IV–B–6
- WAIVER TO ALLOW SITE PLAN REVIEW TO BE PERFORMED BY THE PLANNING BOARD.

SECTION IV–C–4 – GENERAL INTENSITY PROVISIONS
- WAIVER TO ALLOW MORE THAN ONE DWELLING UNIT PER ANY SINGLE LOT (200).

SECTION IV–E–1B – RESIDENTIAL MULTI–UNIT DEVELOPMENT
- WAIVER TO ALLOW THE NUMBER OF DWELLING UNITS PER ACRE TO BE MORE THAN 8 (18.2 UNITS/ACRE)

SECTION IV–E–1D
- WAIVER FROM PROVIDING 2000 S.F. OF LANDSCAPED SPACE PER DWELLING UNIT.

SECTION IV–E–1E
- WAIVER FROM PROVIDING 300 S.F. OF RECREATIONAL SPACE PER DWELLING UNIT.

SECTION IV–E–1F
- WAIVER FROM PROVIDING 50 FEET OF LANDSCAPED BUFFER ADJACENT TO EACH PROPERTY LINE.

SECTION IV–E–1G
- WAIVER FROM PROVIDING 300 S.F. OF RECREATIONAL SPACE PER DWELLING UNIT.

SECTION IV–E–1I
- WAIVER ALLOWING LESS THAN TWO PARKING SPACES PER DWELLING UNIT (1.55 STALLS/UNIT).

SECTION IV–E–5E
- WAIVER TO DEFER TO CURRENT DHCD LOCAL PREFERENCE CATEGORIES.

SECTION V–A–2 – OFF–STREET PARKING REQUIREMENTS
- WAIVER FROM A MINIMUM OF 2.0 PARKING STALLS PER UNIT (1.55 STALLS/UNIT).

SECTION V–A–3 – OFF–STREET PARKING REQUIREMENTS
- WAIVER FROM MINIMUM AISLE WIDTH FOR A PARKING STALL WITH NO OVERHANG

SECTION V–C–1A – EARTH REMOVAL REGULATIONS
- WAIVER ALLOWING THE REMOVAL OF SOIL, LOAM, SAND, GRAVEL, ETC. TO BE REMOVED FROM A LOT.

ARTICLE 10 – PUBLIC WAYS AND COMMON LAND
- WAIVER TO HAVE THE ZONING BOARD OF APPEALS BE THE PERMIT ISSUING AUTHORITY INSTEAD OF THE BOARD OF SELECTMEN.

ARTICLE 10–34A
- WAIVER ALLOWING SOIL, LOAM, SAND, OR GRAVEL FROM LAND IN TOWN NOT IN PUBLIC USE TO ANY LOCATIONS OUTSIDE OF THE TOWN.

ARTICLE 22–5
- WAIVER FROM THE CONSERVATION COMMISSION HAVING THE AUTHORIZATION TO DENY THE PROJECT

ARTICLE 22–8
- WAIVER REQUESTED AS A BOND IS ALREADY REQUIRED OF THE APPLICANT AS PART OF THE 40B PROCESS.

COMMONWEALTH OF MASSACHUSETTS
CARLTON M. QUINN
CIVIL
No. 49923
REGISTERED PROFESSIONAL ENGINEER

PROFESSIONAL ENGINEER FOR
ALLEN & MAJOR ASSOCIATES, INC.

REV	DATE	DESCRIPTION
3.	01/04/2017	ISSUED FOR ZBA RESUBMITTAL
2.	11/2/2016	ISSUED FOR ZBA RESUBMITTAL
1.	10/25/2016	ISSUED FOR ZBA RESUBMITTAL

APPLICANT\OWNER:
BROADSTONE BARE COVE ALLIANCE, LLC. C/O
ALLIANCE RESIDENTIAL COMPANY
184 HIGH STREET, SUITE 401
BOSTON, MA 02110

PROJECT:
BROADSTONE BARE COVE
230 BEAL STREET
HINGHAM, MA

PROJECT NO.	2118-02	DATE:	08-12-2016
SCALE:	N/A	DWG. NAME:	C2118-02
DESIGNED BY:	SJL	CHECKED BY:	CMQ

PREPARED BY:

ALLEN & MAJOR ASSOCIATES, INC.
civil & structural engineering ♦ land surveying
environmental consulting ♦ landscape architecture
www.allenmajor.com
100 COMMERCE WAY
P.O. BOX 2118
WOBURN MA 01888-0118
TEL: (781) 935-6889
FAX: (781) 935-2896
WOBURN, MA ◆ LAKEVILLE, MA ◆ MANCHESTER, NH

THIS DRAWING HAS BEEN PREPARED IN ELECTRONIC FORMAT. CLIENT/CLIENT'S REPRESENTATIVE OR CONSULTANT MAY BE PROVIDED COPIES OF DRAWINGS AND SPECIFICATIONS ON MAGNETIC MEDIA FOR HIS/HER INFORMATION AND USE FOR SPECIFIC APPLICATION TO THIS PROJECT. DUE TO THE POTENTIAL THAT THE MAGNETIC INFORMATION MAY BE MODIFIED UNINTENTIONALLY OR OTHERWISE, ALLEN & MAJOR ASSOCIATES, INC. MAY REMOVE ALL INDICATION OF THE DOCUMENT'S AUTHORSHIP ON THE MAGNETIC MEDIA. PRINTED REPRESENTATIONS OF THE DRAWINGS AND SPECIFICATIONS ISSUED SHALL BE THE ONLY RECORD COPIES OF ALLEN & MAJOR ASSOCIATES, INC.'S WORK PRODUCT.

DRAWING TITLE: ABBREVIATIONS & NOTES

SHEET No. ABB–2

Copyright©2017 Allen & Major Associates, Inc.
All Rights Reserved

STORMWATER POLLUTION PREVENTION PLAN

2.1 GENERAL

FOR GRADING AND DRAINAGE SEE DRAWING SHEETS C-3.

2.1.1. THE FIRST STAGE INVOLVES ACTIVITIES NEEDED TO ADDRESS STORMWATER MANAGEMENT; EXCAVATING MATERIAL DESIGNATED FOR OFF-SITE REMOVAL OR ON-SITE RELOCATION; AND FENCING SELECTED AREAS. STAGE ONE WILL PREPARE SITE FOR CONVENTIONAL CONSTRUCTION.

2.1.2. THE SECOND STAGE WILL CONSIST OF ROUTINE CONSTRUCTION INVOLVING DEMOLITION, PAVING, LANDSCAPING AND UTILITIES.

2.1.3. THERE ARE GENERAL PHASES OF CONSTRUCTION AS IDENTIFIED BELOW. IN EACH PHASE OF CONSTRUCTION, IMPLEMENT STANDARD EROSION AND SEDIMENT CONTROL PRACTICES PRIOR TO INITIATING EARTH DISTURBING ACTIVITIES, AND MAINTAIN THESE PRACTICES THROUGHOUT THE COURSE OF CONSTRUCTION.

TYPICAL PRACTICES TO BE APPLIED TO THE SITE INCLUDE THE FOLLOWING:

PRIOR TO DEMOLITION AND EARTH DISTURBANCE IN ANY WORK AREA, INSTALL SILTATION BARRIERS (BALES OR SILT FENCE WITH BALES) BETWEEN THE WORK AREA AND THE AREA(S) TO WHICH IT DRAINS.

DISCHARGE WATER FROM DEWATERING OPERATIONS TO A TEMPORARY SILTATION TRAP OR SEDIMENTATION BASIN.

PROVIDE TEMPORARY BERMS AND SWALES TO DIVERT SURFACE WATER AWAY FROM THE AREAS THAT WILL BE EXPOSED BY CONSTRUCTION ACTIVITY TO MINIMIZE THE AMOUNT OF SURFACE WATER COMING INTO CONTACT WITH EXPOSED SOILS. PROVIDE STABLE OUTLETS FOR THESE DEVICES, AND LINE OR VEGETATE THESE DIVERSIONS TO PROVIDE FOR DEVICES, AND LINE OR VEGETATE THESE DIVERSIONS TO PROVIDE FOR THEIR STABILITY DURING CONSTRUCTION.

LIMIT THE EXTENT OF EXPOSED SOILS TO AREAS THAT CAN BE WORKED AND RESTABILIZED WITHIN THE CONSTRUCTION SEASON AND DURING THE SPECIFIC CONSTRUCTION PHASE. WHEN EARTHWORK CONSTRUCTION ACTIVITY IN AN AREA IS COMPLETE, STABILIZE THE AREA WITH A SUITABLE SURFACE AS DESCRIBED BELOW.

IN ADDITION TO THESE PRACTICES, FOLLOW THE SPECIAL PRACTICES DESCRIBED BELOW. COMPLY WITH THE DIRECTIONS OF THE OWNER'S REPRESENTATIVE TO ADDRESS EROSION AND SEDIMENTATION CONDITIONS THAT MAY ARISE ON A CASE BY CASE BASIS DURING CONSTRUCTION.

THE FOLLOWING IS A DESCRIPTION OF MINIMUM CONSTRUCTION REQUIREMENTS AND DOES NOT RELIEVE THE CONTRACTOR OF HIS RESPONSIBILITIES WITH REGARD TO DETERMINING THE ADEQUACY OF MEANS AND METHODS OF CONSTRUCTION.

2.2 ESTIMATED CONSTRUCTION SEQUENCING.

THE FOLLOWING IS AN ESTIMATED CONSTRUCTION SEQUENCING. SOME ACTIVITIES MAY OCCUR AT THE SAME TIME RATHER THAN AT SEPARATE TIMES OR OUT OF SEQUENCE DUE TO ACTUAL FIELD CONDITIONS OR OTHER FACTORS. ACTUAL SCHEDULING WILL BE COMPLETED BY THE SITE CONTRACTOR.

(CONTRACTOR TO FOLLOW ANY ADDITIONAL PERMIT REQUIREMENTS OR STEPS AT NO ADDITIONAL COST TO THE OWNERS FROM EITHER STATE OR LOCAL PERMITS, THIS INCLUDES BUT IS NOT LIMITED TO THE ORDER OF CONDITIONS FROM THE HINGHAM ZONING BOARD OF APPEALS)

- INSTALL ALL EROSION CONTROL MEASURES INCLUDING BUT NOT LIMITED TO TEMPORARY STRAW BALE FILTERS, SILT SACKS, CONSTRUCTION ENTRANCES, AND STRAWBALES AND SILT FENCE.
- SETUP STAGING AND MATERIAL STORAGE / STOCKPILE AREAS.
- IF REQUIRED, CONSTRUCT TEMPORARY SILT / DEWATERING BASINS.
- PROTECT AND MARK ALL EXISTING ITEMS NOTED TO REMAIN.
- PERFORM DEMOLITION WORK. SURVEY AND IDENTIFY LIMITS OF SITE CLEARING. CONDUCT SITE CLEARING.
- PULVERIZE EXISTING PAVEMENT AND DEMO EXISTING MATERIALS AS NOTED.
- REMOVE EXISTING LOAM AND SUBSOIL AND STOCKPILE FOR REUSE.
- PERFORM ROUGH GRADING AND CONSTRUCT BUILDING FOUNDATIONS.
- INSTALL UNDERGROUND UTILITIES.
- PERFORM FINE GRADING; PLACE BINDER PAVEMENT COURSE.
- PLACE PAVEMENT TOP COURSE; CONSTRUCT SIDEWALKS AND ALL OTHER SITE IMPROVEMENTS.
- INSTALL PAVEMENT MARKING, SITE SIGNAGE & COMPLETE LANDSCAPING.
- REMOVE TEMPORARY SILT CONTROLS AFTER ONCE GIVEN APPROVAL BY TOWN OF HINGHAM OR THE ENGINEER AND SITE IS STABILIZED.

OPERATION AND MAINTENANCE CONSTRUCTION ACTIVITIES:

1. CONTACT THE TOWN OF HINGHAM AT LEAST THREE (3) DAYS PRIOR TO START OF CONSTRUCTION.
2. INSTALL STRAWBALES AND SILT FENCE AS SHOWN ON THE EROSION CONTROL PLAN. INSTALL CONSTRUCTION FENCING IF DETERMINED TO BE NECESSARY AT THE COMMENCEMENT OF CONSTRUCTION.
3. INSTALL THE CONSTRUCTION ENTRANCES AT THE LOCATIONS SHOWN ON THE EROSION CONTROL PLAN.
4. SITE ACCESS SHALL BE ACHIEVED ONLY FROM THE DESIGNATED CONSTRUCTION ENTRANCES.
5. STOCKPILES SHALL BE STABILIZED WITH EROSION CONTROL MATTING OR TEMPORARY SEEDING WHENEVER PRACTICABLE, BUT IN NO CASE MORE THAN 14 DAYS AFTER THE CONSTRUCTION ACTIVITY IN THAT PORTION OF THE SITE HAS TEMPORARILY OR PERMANENTLY CEASED.
6. INSTALL SILT SACKS AND STRAWBALES AROUND EACH DRAIN INLET AS SOON AS PRACTICABLE.
7. ALL EROSION CONTROL MEASURES SHALL BE INSPECTED WEEKLY AND AFTER EVERY RAINFALL EVENT.
8. ALL EROSION CONTROL MEASURES SHALL BE MAINTAINED, REPAIRED OR REPLACED AS REQUIRED OR AT THE DIRECTION OF THE OWNER'S ENGINEER, THE TOWN ENGINEER, OR THE TOWN CONSERVATION AGENT.
9. SEDIMENT ACCUMULATION UP-GRADIENT OF THE STRAWBALES AND SILT FENCE GREATER THAN 6" IN DEPTH SHALL BE REMOVED AND DISPOSED OF IN ACCORDANCE WITH ALL APPLICABLE REGULATIONS.
10. IF IT APPEARS THAT SEDIMENT IS EXITING THE SITE, SILT SACKS SHALL BE INSTALLED IN ALL CATCH BASINS ADJACENT TO THE SITE. SEDIMENT ACCUMULATION ON ALL ADJACENT CATCH BASIN INLETS SHALL BE REMOVED AND THE SILT SACK REPLACED IF TORN OR DAMAGED.
11. THE CONTRACTOR SHALL COMPLY WITH THE GENERAL AND EROSION NOTES AS SHOWN ON THE SITE DEVELOPMENT PLANS AND SPECIFICATIONS.
12. THE STABILIZED CONSTRUCTION ENTRANCES SHALL BE INSPECTED WEEKLY. THE ENTRANCES SHALL BE MAINTAINED BY ADDING ADDITIONAL CLEAN, ANGULAR, DURABLE STONE TO REMOVE THE SOIL FROM THE CONSTRUCTION VEHICLE TIRES WHEN EXITING THE SITE. IF SOIL IS STILL LEAVING THE SITE VIA THE CONSTRUCTION VEHICLE TIRES, ADJACENT ROADWAYS SHALL BE KEPT CLEAN BY STREET SWEEPING.
13. DUST POLLUTION SHALL BE CONTROLLED USING ON-SITE WATER TRUCKS AND OR AN APPROVED SOIL STABILIZATION PRODUCT.
14. CARE SHOULD BE TAKEN TO PREVENT DISCHARGE OF SEDIMENT TO ABUTTERS.

DIG SAFE

BEFORE YOU DIG
CALL 811 OR
1-888-DIG-SAFE
1-888-344-7233

2.3 MAINTENANCE

2.3.1 DURING THE PERIOD OF CONSTRUCTION AND/OR UNTIL LONG TERM VEGETATION IS ESTABLISHED: SEEDED AREAS WILL BE FERTILIZED AND RESEEDED AS NECESSARY TO INSURE VEGETATION ESTABLISHMENT.

2.3.2 TEMPORARY SEDIMENTATION BASINS WILL BE CHECKED AFTER EACH SIGNIFICANT RAINFALL AND NO LESS THAN WEEKLY, AND CLEANED AS NEEDED TO RETAIN STORAGE CAPACITY.

2.3.3 TEMPORARY DRAINAGE SWALES WILL BE CHECKED WEEKLY AND REPAIRED WHEN NECESSARY.

2.3.4 THE STRAW BALE AND SILTATION FENCING BARRIERS AND OTHER EROSION AND SEDIMENT CONTROL MEASURES/DEVICES SHALL BE INSPECTED, CLEANED, REPLACED AND/OR REPAIRED AS NECESSARY, AND NO LESS THAN WEEKLY, AND AFTER EACH SIGNIFICANT RAINFALL. ACCUMULATED SEDIMENTS SHALL BE REMOVED WHEN THEY REACH HALF THE HEIGHT OF THE BARRIER.

2.4. GENERAL

2.4.1. ALL EROSION AND SEDIMENTATION CONTROL MEASURES SHALL BE CONSTRUCTED IN ACCORDANCE WITH (USDA) NATURAL RESOURCES CONSERVATION SERVICE (NRCS, FORMERLY SCS) GUIDELINES AND ALL LOCAL MUNICIPAL REGULATIONS.

2.4.2. THE CONTRACTOR SHALL BE RESPONSIBLE FOR ESTABLISHING AND MAINTAINING ALL CONTROL POINTS AND BENCH MARKS NECESSARY FOR THE WORK.

2.4.3. EROSION AND SEDIMENTATION CONTROL MEASURES SHALL BE IN PLACE PRIOR TO THE COMMENCEMENT OF ANY SITEWORK OR EARTHWORK OPERATIONS, SHALL BE MAINTAINED DURING CONSTRUCTION, AND SHALL REMAIN IN PLACE UNTIL ALL SITEWORK IS COMPLETE AND GROUNDCOVER IS ESTABLISHED.

2.4.4. ALL WORK SHALL BE IN ACCORDANCE WITH THE PERMITS AND APPROVALS ISSUED BY THE LOCAL PLANNING BOARD, THEIR AGENTS, AND THE CONSTRUCTION SPECIFICATIONS.

2.4.5. STOCKPILES SHALL BE SURROUNDED ON THEIR PERIMETERS WITH STAKED BALES AND/OR SILTATION FENCES TO PREVENT AND/OR CONTROL SILTATION AND EROSION.

2.4.6. TOPS OF STOCKPILES SHALL BE COVERED IN SUCH A MANNER THAT STORMWATER DOES NOT INFILTRATE THE MATERIALS AND THEREBY RENDER THE SAME UNSUITABLE FOR FILL USE.

IF APPLICABLE, EFFORTS SHALL BE MADE TO AVOID STOCKPILING CUT GLACIAL TILL SOILS SINCE STOCKPILING INCREASES EXPOSURE TO PRECIPITATION AND PROVIDES GREATER OPPORTUNITY FOR FROST PENETRATION. SOME OF THE STEPS IN SEQUENCING MAY OCCUR SIMULTANEOUSLY, PARTICULARLY CUT AND FILL OPERATIONS, IN AN EFFORT TO AVOID STOCKPILING.

2.4.7. ALL DISTURBED OR EXPOSED AREAS SUBJECT TO EROSION SHALL BE STABILIZED WITH MULCH OR SEEDED FOR TEMPORARY VEGETATIVE COVER. NO AREA, SUBJECT TO EROSION SHALL BE LEFT DISTURBED AND UNSTABILIZED FOR PERIODS LONGER THAN IS ABSOLUTELY NECESSARY TO CARRY OUT THAT PORTION OF THE CONSTRUCTION WORK.

2.4.9. BALE DIKES SHALL BE CONSTRUCTED AT ALL EXISTING & PROPOSED CATCH BASINS LOCATED IN AREAS SUBJECT TO STORMWATER RUN-OFF FROM PROPOSED CONSTRUCTION, OR AS DIRECTED BY THE OWNER'S REPRESENTATIVE. NO SEDIMENTS SHALL ENTER THE OFF-SITE DRAINAGE SYSTEMS AT ANY TIME. SEDIMENT DISCHARGE TO OFF-SITE PROPERTY IS PROHIBITED.

2.4.10. CULVERT/PIPE INLETS AND OUTFALLS SHALL BE PROTECTED FROM INCOMING SILT UNTIL ALL DISTURBED AREAS TRIBUTARY TO THEM ARE PERMANENTLY STABILIZED.

2.4.11. ANY DEWATERING REQUIRED DURING CONSTRUCTING ON THE SITE SHALL DISCHARGE INTO A DEWATERING FILTER OR THE TEMPORARY SILT BASIN PRIOR TO DISCHARGE TO THE EXISTING DETENTION BASIN OR TO OFF-SITE .

2.4.12. BALES AND SILTATION FENCING AND TEMPORARY SILT BASIN SHALL BE INSPECTED NO LESS THAN WEEKLY AND AFTER EACH SIGNIFICANT RAINFALL AND REPLACED AS REQUIRED.

2.4.13. ALL PROPOSED NON-RIPRAP SLOPES STEEPER THAN 3:1 SHALL BE STABILIZED WITH EROSION CONTROL FABRIC AND PROTECTED FROM EROSION.

2.4.14. THE CONTRACTOR SHALL KEEP ON SITE AT ALL TIMES ADDITIONAL BALES AND EXTRA SILTATION FENCING FOR INSTALLATION AT THE DIRECTION OF THE OWNER'S REPRESENTATIVE OR THE MUNICIPAL AGENTS TO MITIGATE ANY EMERGENCY CONDITION.

2.4.16. THE CONTRACTOR IS RESPONSIBLE FOR OBTAINING AND PAYING FOR ANY PERMITS AND/OR CONNECTION FEES REQUIRED TO CARRY OUT THE WORK INCLUDING BUT NOT LIMITED TO DEMOLITION.

2.4.17. DISPOSAL OF ALL DEMOLISHED MATERIALS IS THE RESPONSIBILITY OF THE CONTRACTOR AND MUST BE OFF-SITE IN ACCORDANCE WITH ALL FEDERAL, STATE, AND LOCAL MUNICIPAL REQUIREMENTS.

2.4.18. THE CONTRACTOR SHALL PROTECT AND/OR CAP OFF ALL EXISTING ON- SITE UTILITY SERVICES DESIGNATED ON THESE DRAWINGS. SERVICES SHALL BE CAPPED OFF WHERE SAME ENTER THE PERIMETER PROPERTY LINE.

2.4.19. THE LIMIT OF WORK LINE FOR THE AREA TO BE CLEARED AND GRUBBED SHALL BE THE SAME AS THE LIMIT OF WORK LINE NECESSARY FOR GRADING PURPOSES, (I.E., THE GRADING LIMITS AROUND THE PERIMETER OF THE PROJECT AREA).

2.4.20. THE AREA OR AREAS OF ENTRANCE AND EXIT TO AND FROM THE SITE SHALL BE MAINTAINED IN A CONDITION WHICH WILL PREVENT TRACKING OR FLOWING OF SEDIMENT ONTO PUBLIC RIGHTS-OF-WAY. ALL SEDIMENT SPILLED, DROPPED, WASHED OR TRACKED ONTO PUBLIC RIGHT-OF-WAY MUST BE REMOVED IMMEDIATELY.

2.4.21. FOLLOWING THE ADDITION OF A BINDER COURSE, THE CONTRACTOR SHALL SWEEP ALL ON-SITE PAVEMENT, IF NECESSARY, UNTIL ALL SITE CONSTRUCTION IS COMPLETED.

N:\PROJECTS\2118-02\CIVIL\DRAWINGS\CURRENT\C-2118-02 - ABBREVIATIONS & NOTES.DWG

TOWN OF HINGHAM LIST OF WAIVERS:

SECTION III-A-1.5 - SCHEDULE OF USES
- WAIVER OF THE PROHIBITION OF MULTI-FAMILY DWELLINGS IN THE OFFICE PARK DISTRICT.

SECTION IV-A - SCHEDULE OF DIMENSIONAL REQUIREMENTS
- WAIVER TO ALLOW FOR A MAXIMUM BUILDING HEIGHT OF 35 FEET (50.33'±).
- WAIVER TO ALLOW FOR A MAXIMUM FLOOR AREA RATIO OF 0.15 (0.60).
- WAIVER TO ALLOW FOR A MINIMUM FRONT YARD SETBACK OF 100 FEET (85.5 FEET).

SECTION IV-B-5 - SPECIAL REQUIREMENTS TO SCHEDULE OF DIMENSIONAL REQUIREMENTS
- WAIVER FOR A MINIMUM OF 20 FEET OF GREEN SPACE AROUND THE PERIMETER OF THE PROPERTY.

SECTION IV-B-6
- WAIVER TO ALLOW SITE PLAN REVIEW TO BE PERFORMED BY THE PLANNING BOARD.

SECTION IV-C-4 - GENERAL INTENSITY PROVISIONS
- WAIVER TO ALLOW MORE THAN ONE DWELLING UNIT PER ANY SINGLE LOT (200).

SECTION IV-F-1B - RESIDENTIAL MULTI-UNIT DEVELOPMENT
- WAIVER TO ALLOW THE NUMBER OF DWELLING UNITS PER ACRE TO BE MORE THAN 8 (18.2 UNITS/ACRE)

SECTION IV-F-1D
- WAIVER FROM PROVIDING 2000 S.F. OF LANDSCAPED SPACE PER DWELLING UNIT.

SECTION IV-F-1E
- WAIVER FROM PROVIDING 300 S.F. OF RECREATIONAL SPACE PER DWELLING UNIT.

SECTION IV-F-1F
- WAIVER FROM PROVIDING 50 FEET OF LANDSCAPED BUFFER ADJACENT TO EACH PROPERTY LINE.

SECTION IV-F-1G
- WAIVER FROM PROVIDING 300 S.F. OF RECREATIONAL SPACE PER DWELLING UNIT.

SECTION IV-F-1I
- WAIVER ALLOWING LESS THAN TWO PARKING SPACES PER DWELLING UNIT (1.55 STALLS/UNIT).

SECTION IV-F-5E
- WAIVER TO DEFER TO CURRENT DHCD LOCAL PREFERENCE CATEGORIES.

SECTION V-A-2 - OFF-STREET PARKING REQUIREMENTS
- WAIVER FROM A MINIMUM OF 2.0 PARKING STALLS PER UNIT (1.55 STALLS/UNIT).

SECTION V-A-3 - OFF-STREET PARKING REQUIREMENTS
- WAIVER FROM MINIMUM AISLE WIDTH FOR A PARKING STALL WITH NO OVERHANG

SECTION V-C-1A - EARTH REMOVAL REGULATIONS
- WAIVER ALLOWING THE REMOVAL OF SOIL, LOAM, SAND, GRAVEL, ETC. TO BE REMOVED FROM A LOT.

ARTICLE 10 - PUBLIC WAYS AND COMMON LAND
- WAIVER TO HAVE THE ZONING BOARD OF APPEALS BE THE PERMIT ISSUING AUTHORITY INSTEAD OF THE BOARD OF SELECTMEN.

ARTICLE 10-34A
- WAIVER ALLOWING SOIL, LOAM, SAND, OR GRAVEL FROM LAND IN TOWN NOT IN PUBLIC USE TO ANY LOCATIONS OUTSIDE OF THE TOWN.

ARTICLE 22-5
- WAIVER FROM THE CONSERVATION COMMISSION HAVING THE AUTHORIZATION TO DENY THE PROJECT

ARTICLE 22-8
- WAIVER REQUESTED AS A BOND IS ALREADY REQUIRED OF THE APPLICANT AS PART OF THE 40B PROCESS.

COMMONWEALTH OF MASSACHUSETTS
CARLTON M. QUINN
CIVIL
No.49923
REGISTERED PROFESSIONAL ENGINEER

PROFESSIONAL ENGINEER FOR
ALLEN & MAJOR ASSOCIATES, INC.

REV	DATE	DESCRIPTION
3.	01/04/2017	ISSUED FOR ZBA RESUBMITTAL
2.	11/2/2016	ISSUED FOR ZBA RESUBMITTAL
1.	10/25/2016	ISSUED FOR ZBA RESUBMITTAL

APPLICANT\OWNER:
BROADSTONE BARE COVE ALLIANCE, LLC. C/O
ALLIANCE RESIDENTIAL COMPANY
184 HIGH STREET, SUITE 401
BOSTON, MA 02110

PROJECT:
BROADSTONE BARE COVE
230 BEAL STREET
HINGHAM, MA

PROJECT NO.	2118-02	DATE:	08-12-2016
SCALE:	N/A	DWG. NAME:	C2118-02
DESIGNED BY:	SJL	CHECKED BY:	CMQ

PREPARED BY:
ALLEN & MAJOR ASSOCIATES, INC.
civil & structural engineering ♦ land surveying
environmental consulting♦ landscape architecture
www.allenmajor.com
100 COMMERCE WAY
P.O. BOX 2118
WOBURN MA 01888-0118
TEL: (781) 935-6889
FAX: (781) 935-2896
WOBURN, MA ♦ LAKEVILLE, MA ♦ MANCHESTER, NH

THIS DRAWING HAS BEEN PREPARED IN ELECTRONIC FORMAT. CLIENT/CLIENT'S REPRESENTATIVE OR CONSULTANT MAY BE PROVIDED COPIES OF DRAWINGS AND SPECIFICATIONS ON MAGNETIC MEDIA FOR HIS/HER INFORMATION AND USE FOR SPECIFIC APPLICATION TO THIS PROJECT. DUE TO THE POTENTIAL THAT THE MAGNETIC INFORMATION MAY BE MODIFIED UNINTENTIONALLY OR OTHERWISE, ALLEN & MAJOR ASSOCIATES, INC. MAY REMOVE ALL INDICATION OF THE DOCUMENT'S AUTHORSHIP ON THE MAGNETIC MEDIA. PRINTED REPRESENTATIONS OF THE DRAWINGS AND SPECIFICATIONS ISSUED SHALL BE THE ONLY RECORD COPIES OF ALLEN & MAJOR ASSOCIATES, INC.'S WORK PRODUCT.

DRAWING TITLE:
ABBREVIATIONS & NOTES

SHEET No.
ABB-3

Copyright©2017 Allen & Major Associates, Inc.
All Rights Reserved

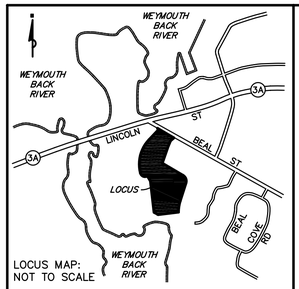

LOCUS MAP:
NOT TO SCALE

UNDERGROUND UTILITIES WERE COMPILED FROM AVAILABLE RECORD PLANS OF UTILITY COMPANIES AND PUBLIC AGENCIES AND ARE APPROXIMATE ONLY. BEFORE DESIGN AND CONSTRUCTION CALL "DIG SAFE" 1-888-344-7233. SOME DATA IS CONFLICTING AND CAN ONLY BE VERIFIED BY EXCAVATION.

TITLE NOTES:

1) NO OBSERVABLE EVIDENCE OF EARTH MOVING WORK, CONSTRUCTION OR BUILDING ADDITIONS WITHIN RECENT MONTHS.

2) NO APPARENT CHANGES IN STREET RIGHT OF WAY LINES, EITHER COMPLETED OR PROPOSED WERE OBSERVED.

3) NO OBSERVABLE EVIDENCE OF SITE USE AS A SOLID WASTE DUMP, SUMP, OR SANITARY LANDFILL.

4) NO OBSERVABLE EVIDENCE OF SITE USE AS A CEMETERY OR BURIAL GROUND.

5) THE BUILDING NUMBER WAS OBSERVED.

6) THE PREMISES HAS 99 SPACES MARKED FOR PARKING.
REGULAR SPACES = 88
HANDICAPPED SPACES = 11

7) OWNER: HINGHAM MUTUAL FIRE INSURANCE COMPANY
DEED BOOK 8081 PAGE 289
ASSESSOR'S PARCEL ID 46-0-17

SCHEDULE B – SECTION 2: EXCEPTIONS of First American Title Insurance Company, Commitment for Title Insurance, Commitment Number NCS-761162-BOS1, Effective Date: November 17, 2015

[5] Easement granted by James M. Salah to Hingham Property Trust dated September 19, 1977, recorded in Book 4392, Page 146. See plan recorded in Plan Book 19, Page 1001. EASEMENT DESCRIBED IS NOT ON LOCUS PROPERTY, 20' WIDE SEWER EASEMENT SHOWN HEREON CONNECTS TO SAID EASEMENT TO THE WEST OF THE LOCUS PROPERTY.

[6] Final Order issued by the Commonwealth of Massachusetts Department of Environmental Management dated January 13, 1987, recorded in Book 7574, Page 221. See plan recorded in Plan Book 28, Page 892. NOT A SURVEY RELATED ITEM.

[7] This item has been intentionally deleted.

[8] Site Assignment by Hingham Board of Health dated May 4, 1988, recorded in Book 8647, Page 280. NOT A SURVEY RELATED ITEM.

[9] Letter issued by the Commonwealth of Massachusetts Department of Environmental Quality Engineering to Hingham Mutual Fire Insurance Co. dated August 25, 1988, recorded in Book 8674, Page 282. NOT A SURVEY RELATED ITEM.

[10] This item has been intentionally deleted.

[11] This item has been intentionally deleted.

[12] This item has been intentionally deleted.

LEGEND:

BERM	BITUMINOUS CONCRETE BERM
BIT CONC	BITUMINOUS CONCRETE
BW	BARBED WIRE
CB	CATCH BASIN
CLF	CHAIN LINK FENCE
DMH	DRAIN MANHOLE
GC	GRANITE CURB
GW	GUY WIRE
I=	INVERT=
LP	LIGHT POLE
MC	METAL COVER
P	POST
R=	RIM=
RCP	REINFORCED CONCRETE PIPE
RET	RETAINING
S	SIGN
SMH	SEWER MANHOLE
TMH	TELEPHONE MANHOLE
TP	TEST PIT
TR	TRANSFORMER
UP	UTILITY POLE
WF	WETLAND FLAG
WG	WATER GATE

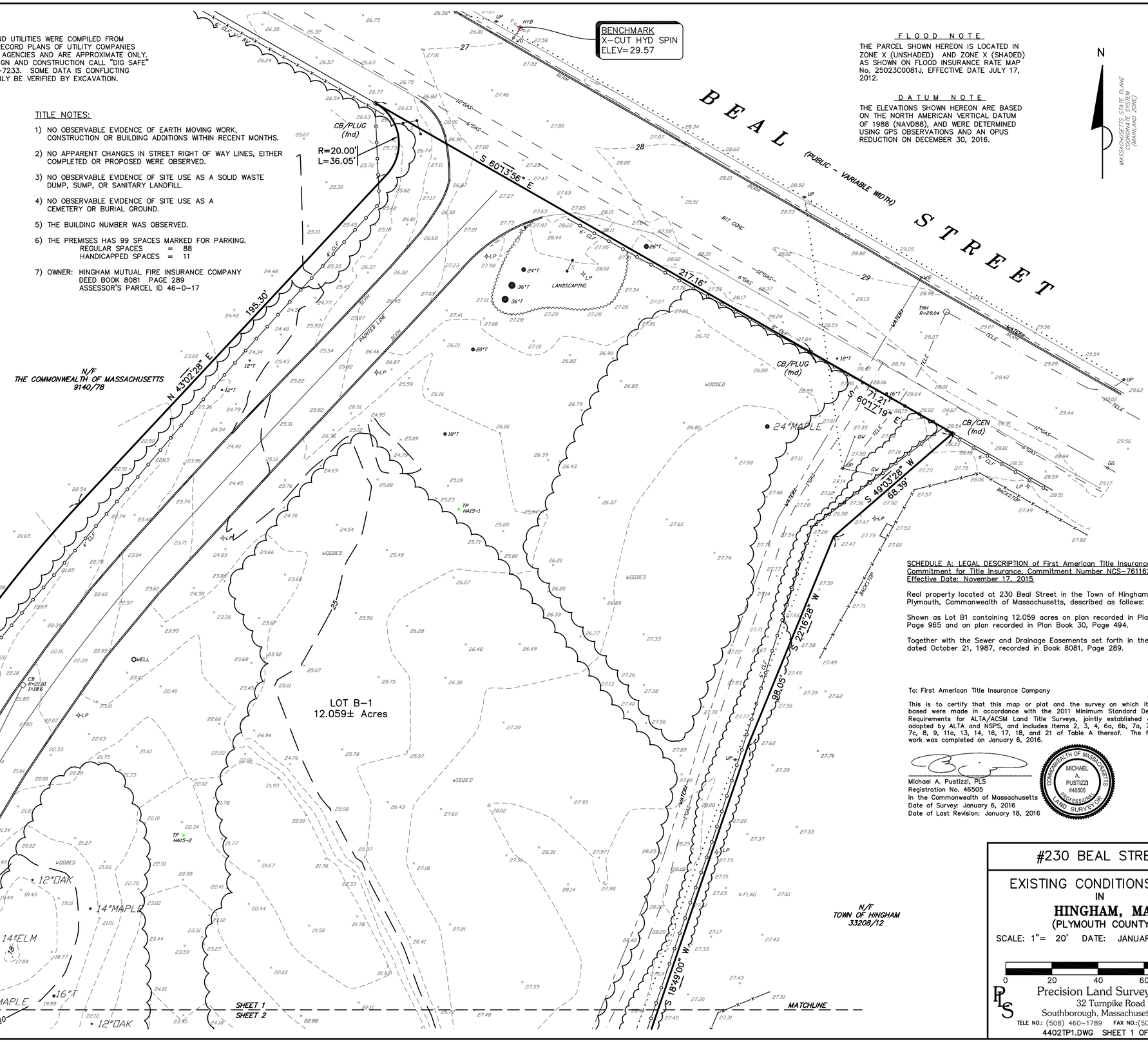

FLOOD NOTE

THE PARCEL SHOWN HEREON IS LOCATED IN ZONE X (UNSHADED) AND ZONE X (SHADED) AS SHOWN ON FLOOD INSURANCE RATE MAP No. 25023C0081J, EFFECTIVE DATE JULY 17, 2012.

DATUM NOTE

THE ELEVATIONS SHOWN HEREON ARE BASED ON THE NORTH AMERICAN VERTICAL DATUM OF 1988 (NAVD88), AND WERE DETERMINED USING GPS OBSERVATIONS AND AN OPUS REDUCTION ON DECEMBER 30, 2016.

N

MASSACHUSETTS STATE PLANE COORDINATE SYSTEM (MAINLAND ZONE)

SCHEDULE A: LEGAL DESCRIPTION of First American Title Insurance Company, Commitment for Title Insurance, Commitment Number NCS-761162-BOS1, Effective Date: November 17, 2015

Real property located at 230 Beal Street in the Town of Hingham, County of Plymouth, Commonwealth of Massachusetts, described as follows:

Shown as Lot B1 containing 12.059 acres on plan recorded in Plan Book 29, Page 965 and on plan recorded in Plan Book 30, Page 494.

Together with the Sewer and Drainage Easements set forth in the deed dated October 21, 1987, recorded in Book 8081, Page 289.

To: First American Title Insurance Company

This is to certify that this map or plat and the survey on which it is based were made in accordance with the 2011 Minimum Standard Detail Requirements for ALTA/ACSM Land Title Surveys, jointly established and adopted by ALTA and NSPS, and includes Items 2, 3, 4, 6a, 6b, 7a, 7b1, 7c, 8, 9, 11a, 13, 14, 16, 17, 18, and 21 of Table A thereof. The field work was completed on January 6, 2016.

Michael A. Pustizzi, PLS
Registration No. 46505
In the Commonwealth of Massachusetts
Date of Survey: January 6, 2016
Date of Last Revision: January 18, 2016

COMMONWEALTH OF MASSACHUSETTS
MICHAEL A. PUSTIZZI
#46505
PROFESSIONAL LAND SURVEYOR

#230 BEAL STREET

EXISTING CONDITIONS PLAN IN HINGHAM, MA (PLYMOUTH COUNTY)

SCALE: 1"= 20' DATE: JANUARY 6, 2016

0 20 40 60 80 ft

Precision Land Surveying, Inc.
32 Turnpike Road
Southborough, Massachusetts 01772
TELE NO.: (508) 460-1789 FAX NO.:(508) 970-0096

4402TP1.DWG SHEET 1 OF 4

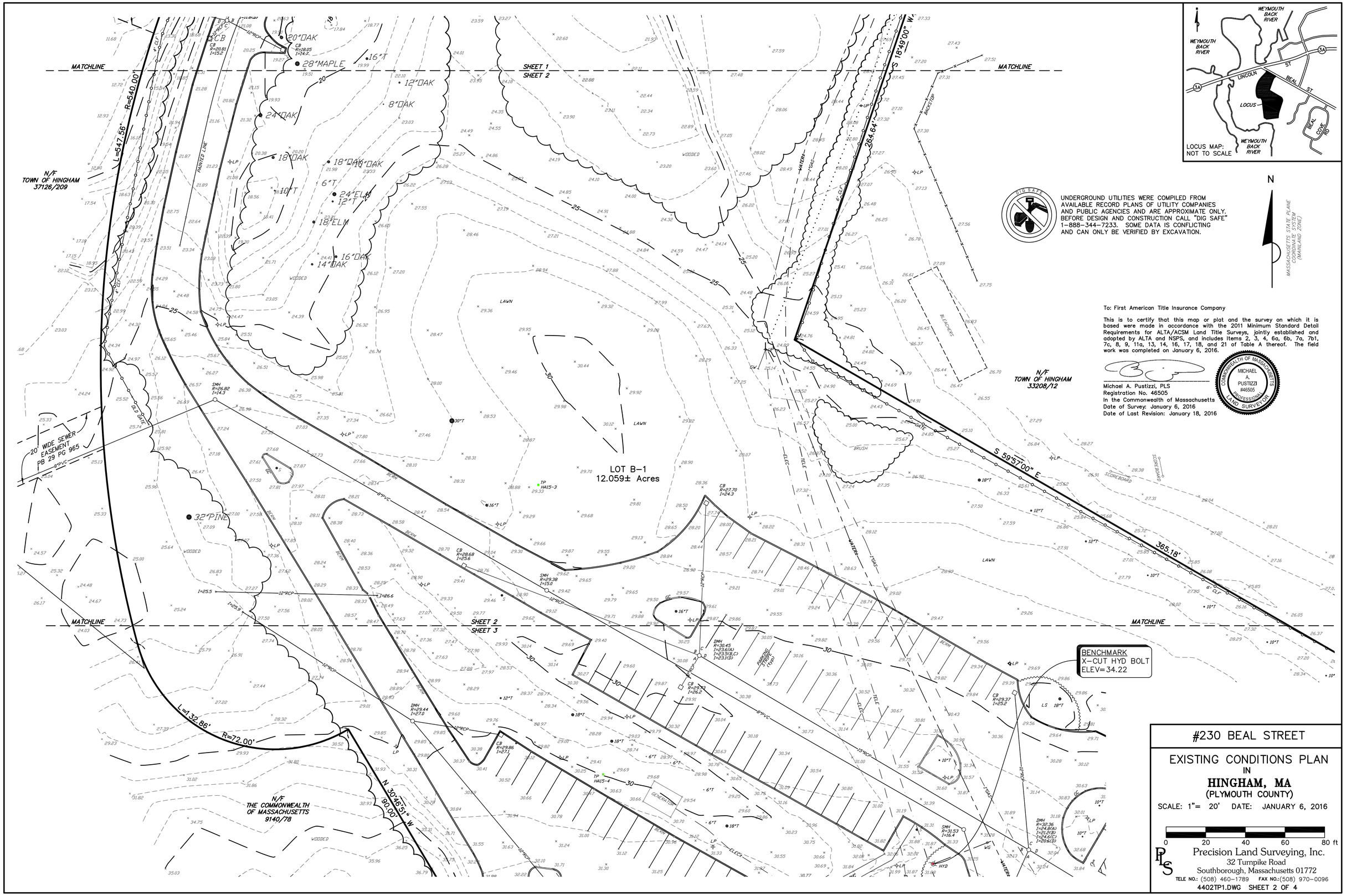
MATCHLINE
SHEET 1
SHEET 2
SHEET 3
N/F
TOWN OF HINGHAM
37126/209
N/F
TOWN OF HINGHAM
33208/12
N/F
THE COMMONWEALTH
OF MASSACHUSETTS
9140/78
LOT B-1
12.059± Acres
L=547.56'
R=540.00'
L=132.86'
R=72.00'
N 30°46'55" W
90.00'
S 18°49'00" W
264.64'
S 59°57'00" E
365.18'
20' WIDE SEWER
EASEMENT
PB 29 PG 965
BENCHMARK
X-CUT HYD BOLT
ELEV=34.22
WEYMOUTH
BACK
RIVER
LOCUS
LOCUS MAP:
NOT TO SCALE
N
MASSACHUSETTS STATE PLANE
COORDINATE SYSTEM
(MAINLAND ZONE)
UNDERGROUND UTILITIES WERE COMPILED FROM
AVAILABLE RECORD PLANS OF UTILITY COMPANIES
AND PUBLIC AGENCIES AND ARE APPROXIMATE ONLY.
BEFORE DESIGN AND CONSTRUCTION CALL "DIG SAFE"
1-888-344-7233. SOME DATA IS CONFLICTING
AND CAN ONLY BE VERIFIED BY EXCAVATION.
To: First American Title Insurance Company
This is to certify that this map or plat and the survey on which it is based were made in accordance with the 2011 Minimum Standard Detail Requirements for ALTA/ACSM Land Title Surveys, jointly established and adopted by ALTA and NSPS, and includes Items 2, 3, 4, 6a, 6b, 7a, 7b1, 7c, 8, 9, 11a, 13, 14, 16, 17, 18, and 21 of Table A thereof. The field work was completed on January 6, 2016.
Michael A. Pustizzi, PLS
Registration No. 46505
In the Commonwealth of Massachusetts
Date of Survey: January 6, 2016
Date of Last Revision: January 18, 2016
COMMONWEALTH OF MASSACHUSETTS
MICHAEL A. PUSTIZZI
#46505
PROFESSIONAL LAND SURVEYOR
#230 BEAL STREET
EXISTING CONDITIONS PLAN
IN
HINGHAM, MA
(PLYMOUTH COUNTY)
SCALE: 1"= 20' DATE: JANUARY 6, 2016
0 20 40 60 80 ft
Precision Land Surveying, Inc.
32 Turnpike Road
Southborough, Massachusetts 01772
TELE NO.: (508) 460-1789 FAX NO.:(508) 970-0096
4402TP1.DWG SHEET 2 OF 4

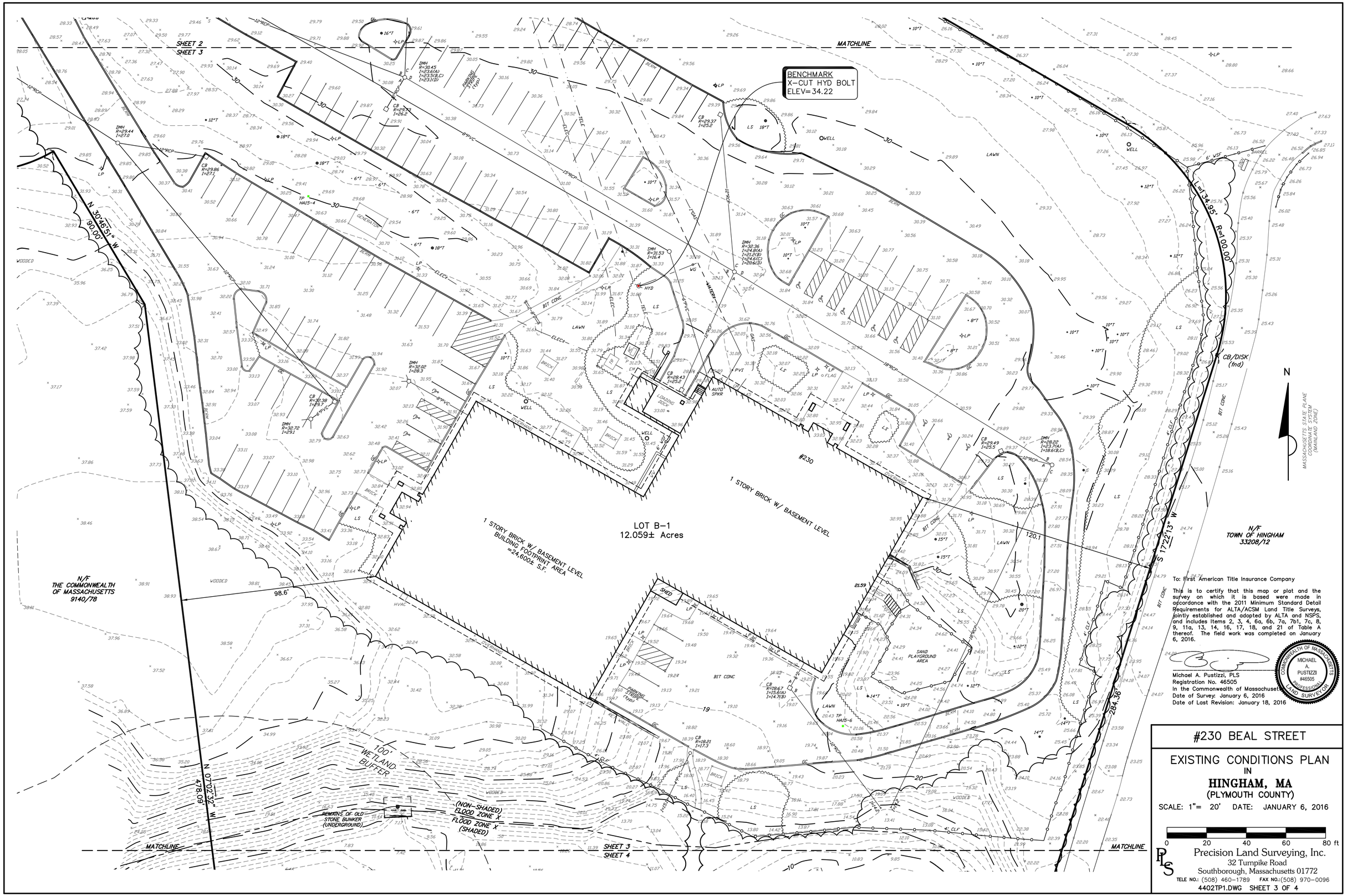

To: First American Title Insurance Company

This is to certify that this map or plat and the survey on which it is based were made in accordance with the 2011 Minimum Standard Detail Requirements for ALTA/ACSM Land Title Surveys, jointly established and adopted by ALTA and NSPS, and includes Items 2, 3, 4, 6a, 6b, 7a, 7b1, 7c, 8, 9, 11a, 13, 14, 16, 17, 18, and 21 of Table A thereof. The field work was completed on January 6, 2016.

Michael A. Pustizzi, PLS
Registration No. 46505
In the Commonwealth of Massachusetts
Date of Survey: January 6, 2016
Date of Last Revision: January 18, 2016

COMMONWEALTH OF MASSACHUSETTS
MICHAEL A. PUSTIZZI
#46505
PROFESSIONAL LAND SURVEYOR

#230 BEAL STREET

EXISTING CONDITIONS PLAN
IN
HINGHAM, MA
(PLYMOUTH COUNTY)

SCALE: 1"= 20' DATE: JANUARY 6, 2016

0 20 40 60 80 ft

Precision Land Surveying, Inc.
32 Turnpike Road
Southborough, Massachusetts 01772
TELE NO.: (508) 460-1789 FAX NO.:(508) 970-0096

4402TP1.DWG SHEET 3 OF 4

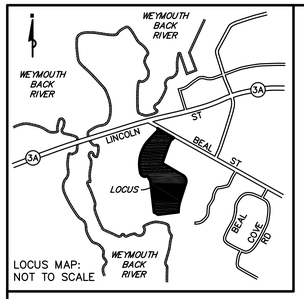

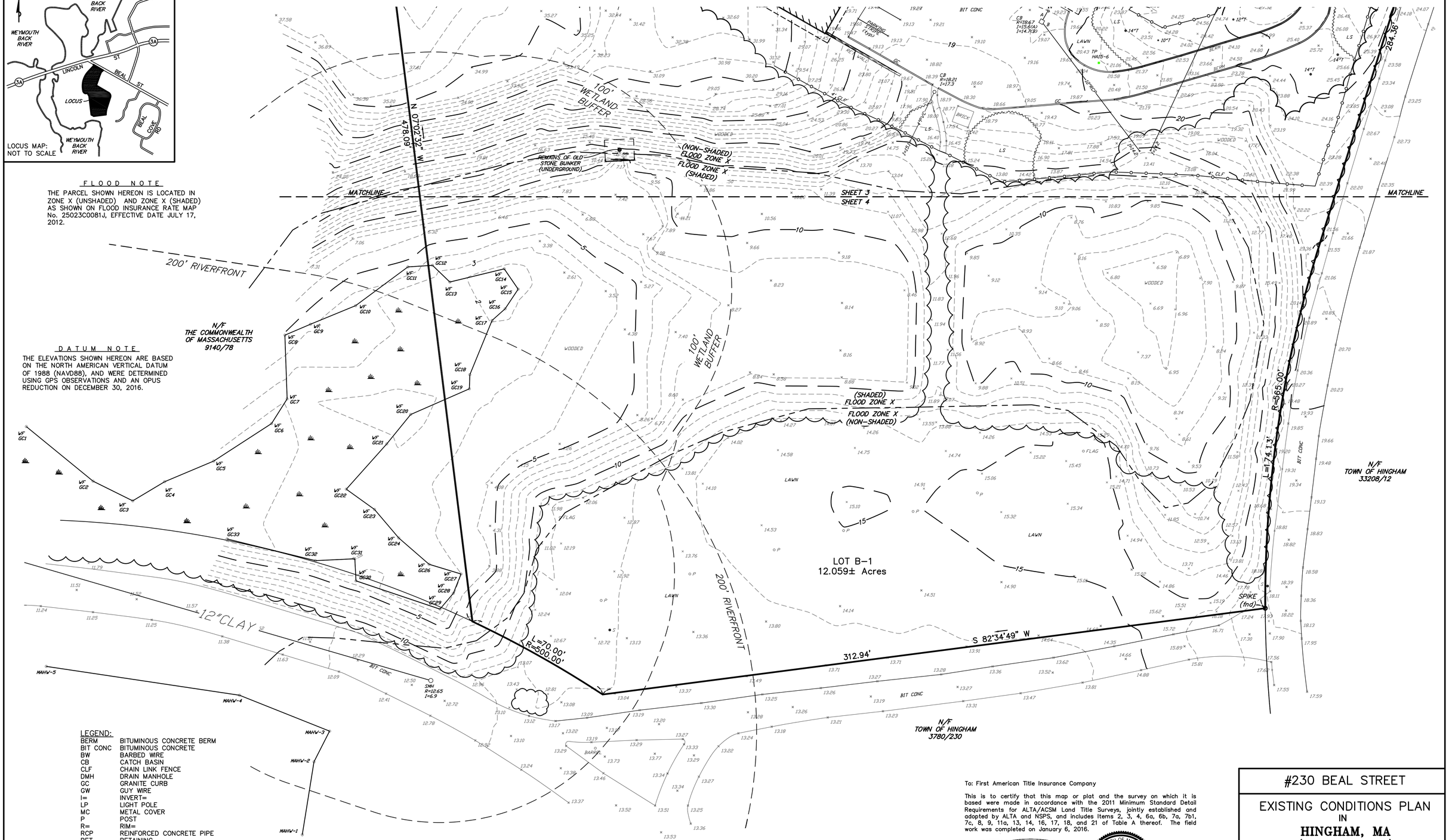

FLOOD NOTE

THE PARCEL SHOWN HEREON IS LOCATED IN ZONE X (UNSHADED) AND ZONE X (SHADED) AS SHOWN ON FLOOD INSURANCE RATE MAP No. 25023C0081J, EFFECTIVE DATE JULY 17, 2012.

DATUM NOTE

THE ELEVATIONS SHOWN HEREON ARE BASED ON THE NORTH AMERICAN VERTICAL DATUM OF 1988 (NAVD88), AND WERE DETERMINED USING GPS OBSERVATIONS AND AN OPUS REDUCTION ON DECEMBER 30, 2016.

LEGEND:

BERM	BITUMINOUS CONCRETE BERM
BIT CONC	BITUMINOUS CONCRETE
BW	BARBED WIRE
CB	CATCH BASIN
CLF	CHAIN LINK FENCE
DMH	DRAIN MANHOLE
GC	GRANITE CURB
GW	GUY WIRE
I=	INVERT=
LP	LIGHT POLE
MC	METAL COVER
P	POST
R=	RIM=
RCP	REINFORCED CONCRETE PIPE
RET	RETAINING
S	SIGN
SMH	SEWER MANHOLE
TMH	TELEPHONE MANHOLE
TP	TEST PIT
TR	TRANSFORMER
UP	UTILITY POLE
WF	WETLAND FLAG
WG	WATER GATE

UNDERGROUND UTILITIES WERE COMPILED FROM AVAILABLE RECORD PLANS OF UTILITY COMPANIES AND PUBLIC AGENCIES AND ARE APPROXIMATE ONLY. BEFORE DESIGN AND CONSTRUCTION CALL "DIG SAFE" 1-888-344-7233. SOME DATA IS CONFLICTING AND CAN ONLY BE VERIFIED BY EXCAVATION.

To: First American Title Insurance Company

This is to certify that this map or plat and the survey on which it is based were made in accordance with the 2011 Minimum Standard Detail Requirements for ALTA/ACSM Land Title Surveys, jointly established and adopted by ALTA and NSPS, and includes Items 2, 3, 4, 6a, 6b, 7a, 7b1, 7c, 8, 9, 11a, 13, 14, 16, 17, 18, and 21 of Table A thereof. The field work was completed on January 6, 2016.

Michael A. Pustizzi, PLS
Registration No. 46505
In the Commonwealth of Massachusetts
Date of Survey: January 6, 2016
Date of Last Revision: January 18, 2016

COMMONWEALTH OF MASSACHUSETTS
MICHAEL A. PUSTIZZI
#46505
PROFESSIONAL LAND SURVEYOR

#230 BEAL STREET

EXISTING CONDITIONS PLAN
IN
HINGHAM, MA
(PLYMOUTH COUNTY)

SCALE: 1"= 20' DATE: JANUARY 6, 2016

0 20 40 60 80 ft

Precision Land Surveying, Inc.
32 Turnpike Road
Southborough, Massachusetts 01772
TELE NO.: (508) 460-1789 FAX NO.:(508) 970-0096

4402TP1.DWG SHEET 4 OF 4

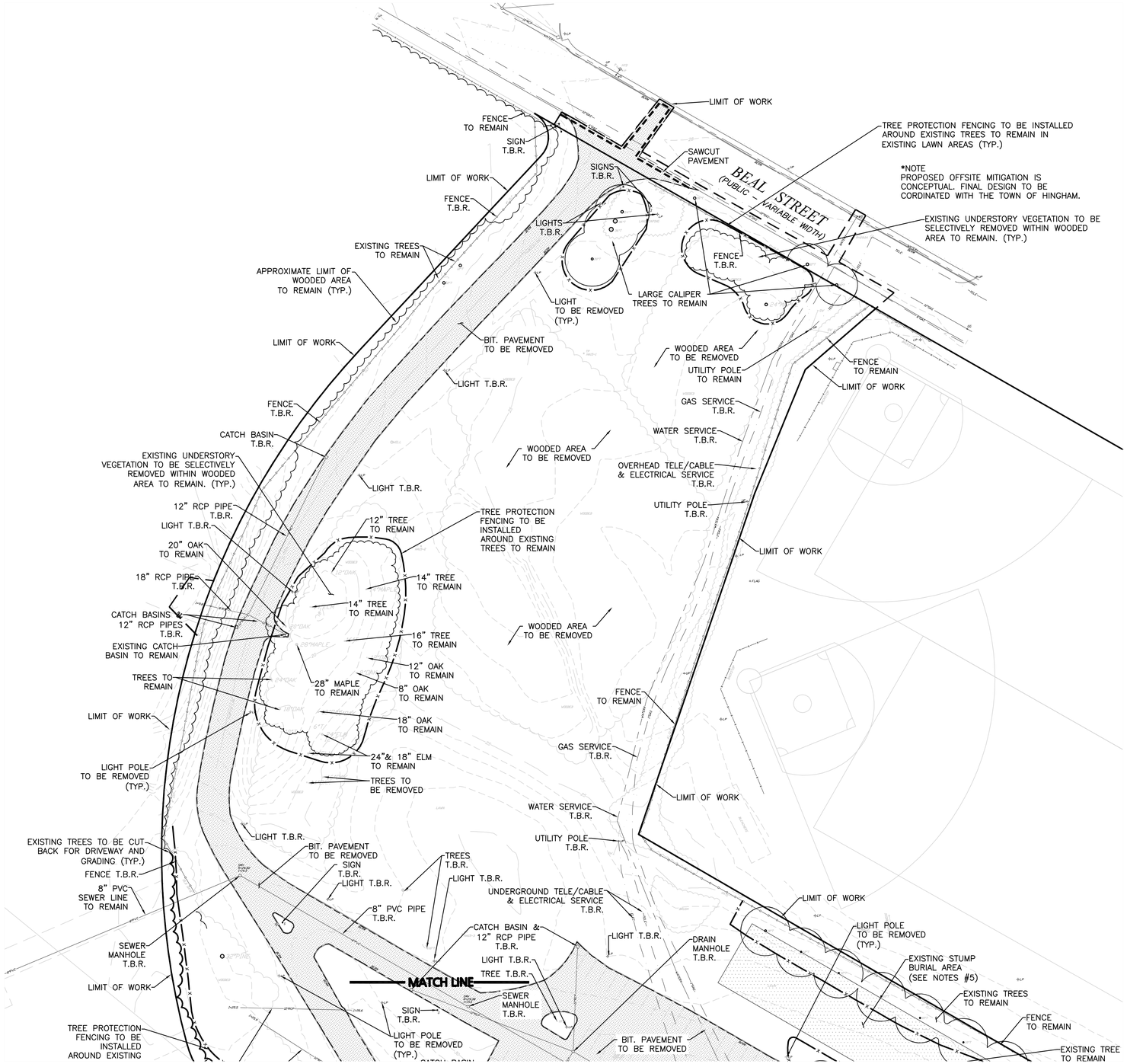

LEGEND:

- PROPERTY LINE
- BUILDING TO BE REMOVED
- SAWCUT PAVEMENT LINE
- LIMIT OF WORK
- TREE PROTECTION/FENCING
- PAVEMENT T.B.R.
- EXISTING WETLANDS
- EXISTING TREES TO REMAIN
- EDGE OF EXISTING TREES TO REMAIN
- 100-FOOT STATE JURISDICTIONAL WETLANDS BUFFER
- 50-FOOT LOCAL NO DISTURB WETLANDS BUFFER
- TO BE REMOVED — T.B.R.

NOTES:

1. THE LOCATIONS OF EXISTING UNDERGROUND UTILITIES ARE SHOWN IN AN APPROXIMATE WAY ONLY AND HAVE NOT BEEN INDEPENDENTLY VERIFIED BY THE OWNER OR IT'S REPRESENTATIVE. THE CONTRACTOR SHALL DETERMINE THE EXACT LOCATION OF ALL EXISTING UTILITIES BEFORE COMMENCING WORK, AND AGREES TO BE FULLY RESPONSIBLE FOR ANY AND ALL DAMAGES WHICH MIGHT BE OCCASIONED BY THE CONTRACTOR'S FAILURE TO EXACTLY LOCATE AND PRESERVE ANY AND ALL UNDERGROUND UTILITIES.
2. THE INFORMATION SHOWN ON THIS PLAN IS THE SOLE PROPERTY OF ALLEN & MAJOR ASSOCIATES, INC. IT'S INTENDED USE IS TO PROVIDE INFORMATION. ANY ALTERATION, MISUSE, OR RECALCULATION OF INFORMATION OR DATA WITHOUT THE EXPRESSED, WRITTEN CONSENT OF ALLEN & MAJOR ASSOCIATES, INC. IS STRICTLY PROHIBITED.
3. THE CONTRACTOR SHALL CONTACT "DIGSAFE" AND THE TOWN OF HINGHAM DEPARTMENT OF PUBLIC WORKS (DPW) AT LEAST 72 HOURS PRIOR TO ANY EXCAVATION WORK TO REQUEST THE LOCATION OF THE EXISTING UTILITIES.

   DIGSAFE: 1-888-344-7233
   HINGHAM DPW: 781-741-1430
4. SEE ABBREVIATIONS AND NOTES PLAN, SHEET ABB-1 – ABB-2 FOR EROSION CONTROL NOTES.
5. THE CONTRACTOR SHALL REVIEW THE RECORD PLAN ENTITLED "BUILDING DEMOLITION AND DEBRIS DISPOSAL AREA PLAN" OF 1988 AND VERIFY, IN THE FIELD, THE ELEVATION AND LOCATION OF THE DEBRIS AND STUMP BURIAL AREA. SPECIAL PRECAUTIONS SHALL BE TAKEN TO ENSURE THIS AREA IS NOT DISTURBED DURING CONSTRUCTION.
6. CONTRACTOR TO WALK THE SITE WITH OWNER'S REPRESENTATIVE PRIOR TO CONSTRUCTION TO VERIFY ALL TREES TO REMAIN.

DIG SAFE

BEFORE YOU DIG
CALL 811 OR
1-888-DIG-SAFE
1-888-344-7233

GRAPHIC SCALE

40 0 20 40 80 160

(IN FEET)
1 inch = 40 ft.

N:\PROJECTS\2118-02\CIVIL\DRAWINGS\CURRENT\C-2118-02 – DEMOLITION.DWG

TOWN OF HINGHAM LIST OF WAIVERS:

SECTION III-A-1.5 – SCHEDULE OF USES
- WAIVER OF THE PROHIBITION OF MULTI-FAMILY DWELLINGS IN THE OFFICE PARK DISTRICT.

SECTION IV-A – SCHEDULE OF DIMENSIONAL REQUIREMENTS
- WAIVER TO ALLOW FOR A MAXIMUM BUILDING HEIGHT OF 35 FEET (50.33'±).
- WAIVER TO ALLOW FOR A MAXIMUM FLOOR AREA RATIO OF 0.15 (0.60).
- WAIVER TO ALLOW FOR A MINIMUM FRONT YARD SETBACK OF 100 FEET (85.5 FEET).

SECTION IV-B-5 – SPECIAL REQUIREMENTS TO SCHEDULE OF DIMENSIONAL REQUIREMENTS
- WAIVER FOR A MINIMUM OF 20 FEET OF GREEN SPACE AROUND THE PERIMETER OF THE PROPERTY.

SECTION IV-B-6
- WAIVER TO ALLOW SITE PLAN REVIEW TO BE PERFORMED BY THE PLANNING BOARD.

SECTION IV-C-4 – GENERAL INTENSITY PROVISIONS
- WAIVER TO ALLOW MORE THAN ONE DWELLING UNIT PER ANY SINGLE LOT (200).

SECTION IV-E-1B – RESIDENTIAL MULTI-UNIT DEVELOPMENT
- WAIVER TO ALLOW THE NUMBER OF DWELLING UNITS PER ACRE TO BE MORE THAN 8 (18.2 UNITS/ACRE)

SECTION IV-E-1D
- WAIVER FROM PROVIDING 2000 S.F. OF LANDSCAPED SPACE PER DWELLING UNIT.

SECTION IV-E-1E
- WAIVER FROM PROVIDING 300 S.F. OF RECREATIONAL SPACE PER DWELLING UNIT.

SECTION IV-E-1F
- WAIVER FROM PROVIDING 50 FEET OF LANDSCAPED BUFFER ADJACENT TO EACH PROPERTY LINE.

SECTION IV-E-1G
- WAIVER FROM PROVIDING 300 S.F. OF RECREATIONAL SPACE PER DWELLING UNIT.

SECTION IV-E-1I
- WAIVER ALLOWING LESS THAN TWO PARKING SPACES PER DWELLING UNIT (1.55 STALLS/UNIT).

SECTION IV-E-5E
- WAIVER TO DEFER TO CURRENT DHCD LOCAL PREFERENCE CATEGORIES.

SECTION V-A-2 – OFF-STREET PARKING REQUIREMENTS
- WAIVER FROM A MINIMUM OF 2.0 PARKING STALLS PER UNIT (1.55 STALLS/UNIT).

SECTION V-A-3 – OFF-STREET PARKING REQUIREMENTS
- WAIVER FROM MINIMUM AISLE WIDTH FOR A PARKING STALL WITH NO OVERHANG

SECTION V-C-1A – EARTH REMOVAL REGULATIONS
- WAIVER ALLOWING THE REMOVAL OF SOIL, LOAM, SAND, GRAVEL, ETC. TO BE REMOVED FROM A LOT.

ARTICLE 10 – PUBLIC WAYS AND COMMON LAND
- WAIVER TO HAVE THE ZONING BOARD OF APPEALS BE THE PERMIT ISSUING AUTHORITY INSTEAD OF THE BOARD OF SELECTMEN.

ARTICLE 10-34A
- WAIVER ALLOWING SOIL, LOAM, SAND, OR GRAVEL FROM LAND IN TOWN NOT IN PUBLIC USE TO ANY LOCATIONS OUTSIDE OF THE TOWN.

ARTICLE 22-5
- WAIVER FROM THE CONSERVATION COMMISSION HAVING THE AUTHORIZATION TO DENY THE PROJECT

ARTICLE 22-8
- WAIVER REQUESTED AS A BOND IS ALREADY REQUIRED OF THE APPLICANT AS PART OF THE 40B PROCESS.

COMMONWEALTH OF MASSACHUSETTS
CARLTON M. QUINN
CIVIL
No.49923
REGISTERED PROFESSIONAL ENGINEER

PROFESSIONAL ENGINEER FOR
ALLEN & MAJOR ASSOCIATES, INC.

REV	DATE	DESCRIPTION
3.	01/04/2017	ISSUED FOR ZBA RESUBMITTAL
2.	11/2/2016	ISSUED FOR ZBA RESUBMITTAL
1.	10/25/2016	ISSUED FOR ZBA RESUBMITTAL

APPLICANT\OWNER:
BROADSTONE BARE COVE ALLIANCE, LLC. C/O
ALLIANCE RESIDENTIAL COMPANY
184 HIGH STREET, SUITE 401
BOSTON, MA 02110

PROJECT:
BROADSTONE BARE COVE
230 BEAL STREET
HINGHAM, MA

PROJECT NO.	2118-02	DATE:	08-12-2016
SCALE:	1" = 40'	DWG. NAME:	C2118-02
DESIGNED BY:	SJL	CHECKED BY:	CMQ

PREPARED BY:

ALLEN & MAJOR ASSOCIATES, INC.
civil & structural engineering ◆ land surveying
environmental consulting ◆ landscape architecture
www.allenmajor.com
100 COMMERCE WAY
P.O. BOX 2118
WOBURN MA 01888-0118
TEL: (781) 935-6889
FAX: (781) 935-2896
WOBURN, MA ◆ LAKEVILLE, MA ◆ MANCHESTER, NH

THIS DRAWING HAS BEEN PREPARED IN ELECTRONIC FORMAT. CLIENT/CLIENT'S REPRESENTATIVE OR CONSULTANT MAY BE PROVIDED COPIES OF DRAWINGS AND SPECIFICATIONS ON MAGNETIC MEDIA FOR HIS/HER INFORMATION AND USE FOR SPECIFIC APPLICATION TO THIS PROJECT. DUE TO THE POTENTIAL THAT THE MAGNETIC INFORMATION MAY BE MODIFIED UNINTENTIONALLY OR OTHERWISE, ALLEN & MAJOR ASSOCIATES, INC. MAY REMOVE ALL INDICATION OF THE DOCUMENT'S AUTHORSHIP ON THE MAGNETIC MEDIA. PRINTED REPRESENTATIONS OF THE DRAWINGS AND SPECIFICATIONS ISSUED SHALL BE THE ONLY RECORD COPIES OF ALLEN & MAJOR ASSOCIATES, INC.'S WORK PRODUCT.

DRAWING TITLE: DEMOLITION PLAN

SHEET No. C-1A

Copyright©2017 Allen & Major Associates, Inc.
All Rights Reserved

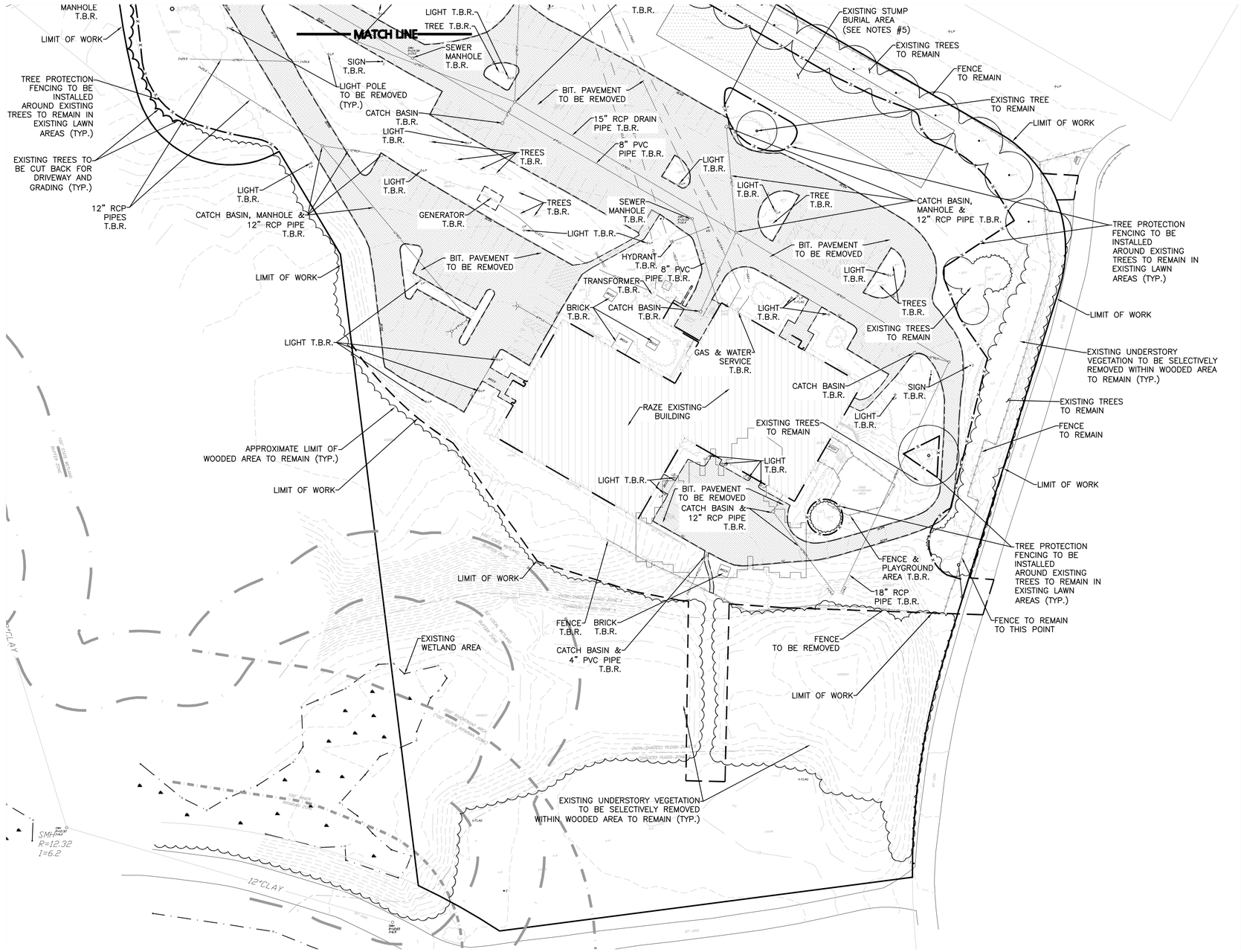

LEGEND:

PROPERTY LINE	
BUILDING TO BE REMOVED	
SAWCUT PAVEMENT LINE	
LIMIT OF WORK	
TREE PROTECTION/FENCING	
PAVEMENT T.B.R.	
EXISTING WETLANDS	
EXISTING TREES TO REMAIN	
EDGE OF EXISTING TREES TO REMAIN	
100-FOOT STATE JURISDICTIONAL WETLANDS BUFFER	
50-FOOT LOCAL NO DISTURB WETLANDS BUFFER	
TO BE REMOVED	T.B.R.

NOTES:

1. THE LOCATIONS OF EXISTING UNDERGROUND UTILITIES ARE SHOWN IN AN APPROXIMATE WAY ONLY AND HAVE NOT BEEN INDEPENDENTLY VERIFIED BY THE OWNER OR IT'S REPRESENTATIVE. THE CONTRACTOR SHALL DETERMINE THE EXACT LOCATION OF ALL EXISTING UTILITIES BEFORE COMMENCING WORK, AND AGREES TO BE FULLY RESPONSIBLE FOR ANY AND ALL DAMAGES WHICH MIGHT BE OCCASIONED BY THE CONTRACTOR'S FAILURE TO EXACTLY LOCATE AND PRESERVE ANY AND ALL UNDERGROUND UTILITIES.

2. THE INFORMATION SHOWN ON THIS PLAN IS THE SOLE PROPERTY OF ALLEN & MAJOR ASSOCIATES, INC. IT'S INTENDED USE IS TO PROVIDE INFORMATION. ANY ALTERATION, MISUSE, OR RECALCULATION OF INFORMATION OR DATA WITHOUT THE EXPRESSED, WRITTEN CONSENT OF ALLEN & MAJOR ASSOCIATES, INC. IS STRICTLY PROHIBITED.

3. THE CONTRACTOR SHALL CONTACT "DIGSAFE" AND THE TOWN OF HINGHAM DEPARTMENT OF PUBLIC WORKS (DPW) AT LEAST 72 HOURS PRIOR TO ANY EXCAVATION WORK TO REQUEST THE LOCATION OF THE EXISTING UTILITIES.

   DIGSAFE: 1-888-344-7233
   HINGHAM DPW: 781-741-1430

4. SEE ABBREVIATIONS AND NOTES PLAN, SHEET ABB-1 – ABB-2 FOR EROSION CONTROL NOTES.

5. THE CONTRACTOR SHALL REVIEW THE RECORD PLAN ENTITLED "BUILDING DEMOLITION AND DEBRIS DISPOSAL AREA PLAN" OF 1988 AND VERIFY, IN THE FIELD, THE ELEVATION AND LOCATION OF THE DEBRIS AND STUMP BURIAL AREA. SPECIAL PRECAUTIONS SHALL BE TAKEN TO ENSURE THIS AREA IS NOT DISTURBED DURING CONSTRUCTION.

6. CONTRACTOR TO WALK THE SITE WITH OWNER'S REPRESENTATIVE PRIOR TO CONSTRUCTION TO VERIFY ALL TREES TO REMAIN.

DIG SAFE

BEFORE YOU DIG
CALL 811 OR
1-888-DIG-SAFE
1-888-344-7233

GRAPHIC SCALE

40 0 20 40 80 160

(IN FEET)
1 inch = 40 ft.

N:\PROJECTS\2118-02\CIVIL\DRAWINGS\CURRENT\C-2118-02 – DEMOLITION.DWG

TOWN OF HINGHAM LIST OF WAIVERS:

SECTION III-A-1.5 – SCHEDULE OF USES
- WAIVER OF THE PROHIBITION OF MULTI-FAMILY DWELLINGS IN THE OFFICE PARK DISTRICT.

SECTION IV-A – SCHEDULE OF DIMENSIONAL REQUIREMENTS
- WAIVER TO ALLOW FOR A MAXIMUM BUILDING HEIGHT OF 35 FEET (50.33'±).
- WAIVER TO ALLOW FOR A MAXIMUM FLOOR AREA RATIO OF 0.15 (0.60).
- WAIVER TO ALLOW FOR A MINIMUM FRONT YARD SETBACK OF 100 FEET (85.5 FEET).

SECTION IV-B-5 – SPECIAL REQUIREMENTS TO SCHEDULE OF DIMENSIONAL REQUIREMENTS
- WAIVER FOR A MINIMUM OF 20 FEET OF GREEN SPACE AROUND THE PERIMETER OF THE PROPERTY.

SECTION IV-B-6
- WAIVER TO ALLOW SITE PLAN REVIEW TO BE PERFORMED BY THE PLANNING BOARD.

SECTION IV-C-4 – GENERAL INTENSITY PROVISIONS
- WAIVER TO ALLOW MORE THAN ONE DWELLING UNIT PER ANY SINGLE LOT (200).

SECTION IV-E-1B – RESIDENTIAL MULTI-UNIT DEVELOPMENT
- WAIVER TO ALLOW THE NUMBER OF DWELLING UNITS PER ACRE TO BE MORE THAN 8 (18.2 UNITS/ACRE)

SECTION IV-E-1D
- WAIVER FROM PROVIDING 2000 S.F. OF LANDSCAPED SPACE PER DWELLING UNIT.

SECTION IV-E-1E
- WAIVER FROM PROVIDING 300 S.F. OF RECREATIONAL SPACE PER DWELLING UNIT.

SECTION IV-E-1F
- WAIVER FROM PROVIDING 50 FEET OF LANDSCAPED BUFFER ADJACENT TO EACH PROPERTY LINE.

SECTION IV-E-1G
- WAIVER FROM PROVIDING 300 S.F. OF RECREATIONAL SPACE PER DWELLING UNIT.

SECTION IV-E-1I
- WAIVER ALLOWING LESS THAN TWO PARKING SPACES PER DWELLING UNIT (1.55 STALLS/UNIT).

SECTION IV-E-5E
- WAIVER TO DEFER TO CURRENT DHCD LOCAL PREFERENCE CATEGORIES.

SECTION V-A-2 – OFF-STREET PARKING REQUIREMENTS
- WAIVER FROM A MINIMUM OF 2.0 PARKING STALLS PER UNIT (1.55 STALLS/UNIT).

SECTION V-A-3 – OFF-STREET PARKING REQUIREMENTS
- WAIVER FROM MINIMUM AISLE WIDTH FOR A PARKING STALL WITH NO OVERHANG

SECTION V-C-1A – EARTH REMOVAL REGULATIONS
- WAIVER ALLOWING THE REMOVAL OF SOIL, LOAM, SAND, GRAVEL, ETC. TO BE REMOVED FROM A LOT.

ARTICLE 10 – PUBLIC WAYS AND COMMON LAND
- WAIVER TO HAVE THE ZONING BOARD OF APPEALS BE THE PERMIT ISSUING AUTHORITY INSTEAD OF THE BOARD OF SELECTMEN.

ARTICLE 10-34A
- WAIVER ALLOWING SOIL, LOAM, SAND, OR GRAVEL FROM LAND IN TOWN NOT IN PUBLIC USE TO ANY LOCATIONS OUTSIDE OF THE TOWN.

ARTICLE 22-5
- WAIVER FROM THE CONSERVATION COMMISSION HAVING THE AUTHORIZATION TO DENY THE PROJECT

ARTICLE 22-8
- WAIVER REQUESTED AS A BOND IS ALREADY REQUIRED OF THE APPLICANT AS PART OF THE 40B PROCESS.

COMMONWEALTH OF MASSACHUSETTS
CARLTON M. QUINN
CIVIL
No.49923
REGISTERED PROFESSIONAL ENGINEER

PROFESSIONAL ENGINEER FOR
ALLEN & MAJOR ASSOCIATES, INC.

REV	DATE	DESCRIPTION
3.	01/04/2017	ISSUED FOR ZBA RESUBMITTAL
2.	11/2/2016	ISSUED FOR ZBA RESUBMITTAL
1.	10/25/2016	ISSUED FOR ZBA RESUBMITTAL

APPLICANT\OWNER:
BROADSTONE BARE COVE ALLIANCE, LLC. C/O
ALLIANCE RESIDENTIAL COMPANY
184 HIGH STREET, SUITE 401
BOSTON, MA 02110

PROJECT:
BROADSTONE BARE COVE
230 BEAL STREET
HINGHAM, MA

PROJECT NO.	2118-02	DATE:	08-12-2016
SCALE:	1" = 40'	DWG. NAME:	C2118-02
DESIGNED BY:	SJL	CHECKED BY:	CMQ

PREPARED BY:
ALLEN & MAJOR ASSOCIATES, INC.
civil & structural engineering ◆ land surveying
environmental consulting ◆ landscape architecture
www.allenmajor.com
100 COMMERCE WAY
P.O. BOX 2118
WOBURN MA 01888-0118
TEL: (781) 935-6889
FAX: (781) 935-2896
WOBURN, MA ◆ LAKEVILLE, MA ◆ MANCHESTER, NH

THIS DRAWING HAS BEEN PREPARED IN ELECTRONIC FORMAT. CLIENT/CLIENT'S REPRESENTATIVE OR CONSULTANT MAY BE PROVIDED COPIES OF DRAWINGS AND SPECIFICATIONS ON MAGNETIC MEDIA FOR HIS/HER INFORMATION AND USE FOR SPECIFIC APPLICATION TO THIS PROJECT. DUE TO THE POTENTIAL THAT THE MAGNETIC INFORMATION MAY BE MODIFIED UNINTENTIONALLY OR OTHERWISE, ALLEN & MAJOR ASSOCIATES, INC. MAY REMOVE ALL INDICATION OF THE DOCUMENT'S AUTHORSHIP ON THE MAGNETIC MEDIA. PRINTED REPRESENTATIONS OF THE DRAWINGS AND SPECIFICATIONS ISSUED SHALL BE THE ONLY RECORD COPIES OF ALLEN & MAJOR ASSOCIATES, INC.'S WORK PRODUCT.

DRAWING TITLE: DEMOLITION PLAN

SHEET No. C-1B

Copyright©2017 Allen & Major Associates, Inc.
All Rights Reserved

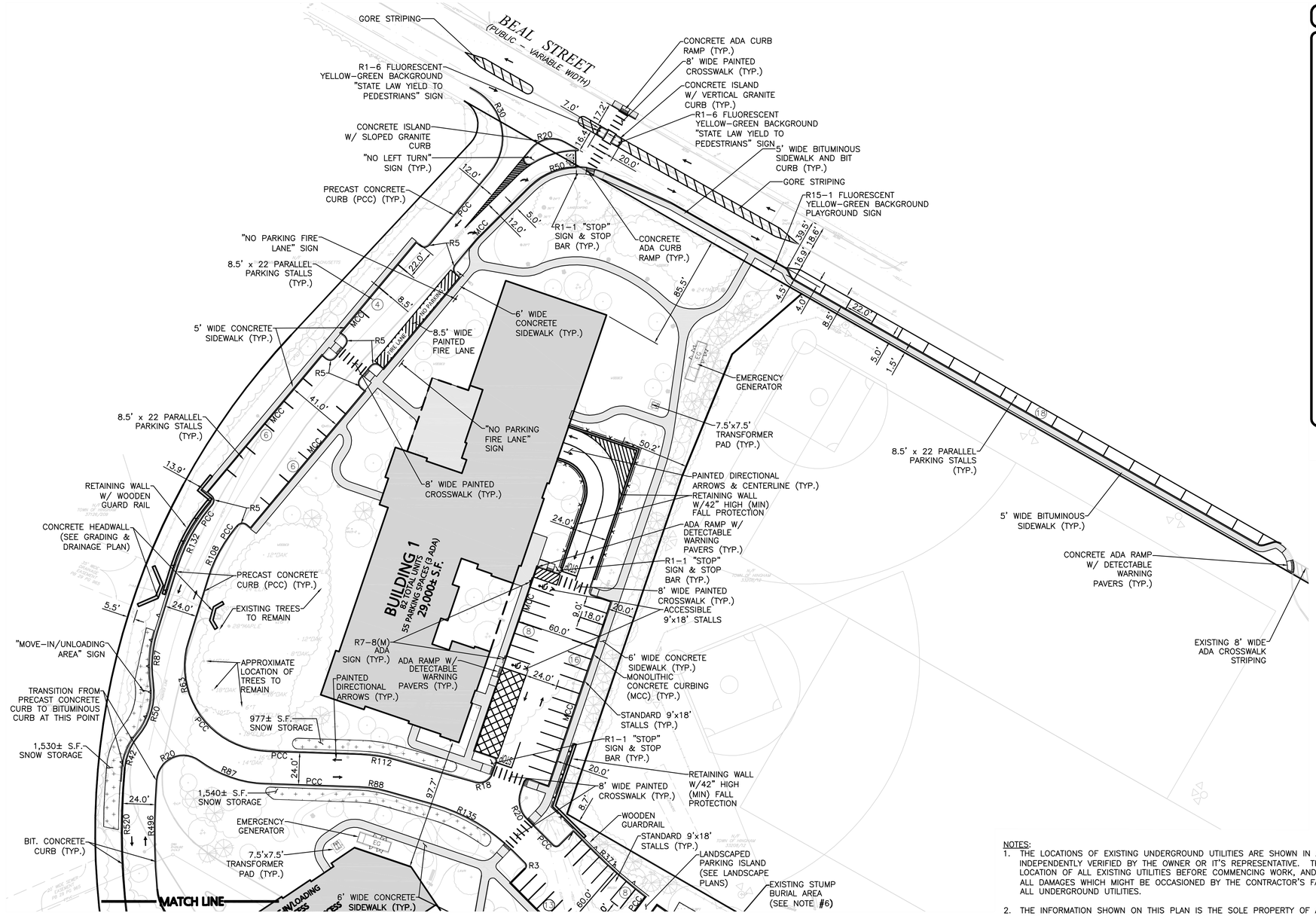

LEGEND:

- PROP. PROPERTY LINE
- SIGN
- BOLLARD
- BUILDING
- BUILDING ARCHITECTURE
- BUILDING INTERIOR WALLS
- CURB
- RETAINING WALL
- PARKING STRIPING
- ROADWAY STRIPING
- TRAFFIC ARROWS
- HEAVY DUTY CONCRETE
- SIDEWALK
- FIRE ACCESS (GRASS PAVERS)
- PERVIOUS PAVERS
- ADA ACCESSIBLE RAMP
- ADA DET. WARNING SURFACE
- TRANSFORMER
- PARKING COUNT
- SNOW STORAGE
- WOOD GUARDRAIL
- CHAIN LINK FENCE
- WOOD FENCE
- DECORATIVE FENCE

DIMENSIONAL REQUIREMENTS: OFFICE PARK DISTRICT
FLOOD PLAIN & WATERSHED PROTECTION DISTRICT

ITEM	REQUIRED/ALLOWED	EXISTING	PROPOSED
LOT AREA (MIN.)	217,800 S.F. 5.0 ACRES	525,291± S.F. 12.059± ACRES	525,291± S.F. 12.059± ACRES
LOT FRONTAGE (MIN.)	200'	217.2'	217.2'
FRONT YARD BUILDING SETBACK	100' (MIN.)	798.7'	85.5' *
SIDE YARD BUILDING SETBACK	50' (MIN.)	98.6'	51.8'
REAR YARD BUILDING SETBACK	50' (MIN.)	291.6'	329.1'
BUILDING LOT COVERAGE (MAX.)	20%	4.7%	15.0%
BUILDING HEIGHT (MAX.)	35'	TBD	50.33' *
FLOOR AREA RATIO	0.15	.05	0.60 *

* WILL REQUIRE RELIEF THROUGH A COMPREHENSIVE PERMIT.

OFF-STREET PARKING SUMMARY

USE: RESIDENTIAL USES, INCLUDING SINGLE FAMILY, TWO FAMILY, AND MULTI-FAMILY

2.0 SPACES PER UNIT

PARKING SUMMARY:

MULTI-FAMILY 220 UNITS x 2.0 SPACES/UNIT =440 SPACES
TOTAL OFF-STREET PARKING REQUIREMENT =440 SPACES

ADA REQUIRED: THERE ARE BETWEEN 301-400 PARKING SPACES, REQUIRING 8 TOTAL PARKING STALLS TO BE ACCESSIBLE AND 2 BEING VAN ACCESSIBLE.

ADA PROVIDED: 12 TOTAL ACCESSIBLE PARKING, WITH 8 BEING VAN ACCESSIBLE.

UNCOVERED PARKING		GARAGE PARKING		TOTAL PROVIDED	TOTAL REQUIRED
STANDARD (9' x 18')	ACCESSIBLE (9'x18')	STANDARD (9' x 18')	ACCESSIBLE (9'x18')		
128	4	197	11	340*	440

NOTES:

1. THE LOCATIONS OF EXISTING UNDERGROUND UTILITIES ARE SHOWN IN AN APPROXIMATE WAY ONLY AND HAVE NOT BEEN INDEPENDENTLY VERIFIED BY THE OWNER OR IT'S REPRESENTATIVE. THE CONTRACTOR SHALL DETERMINE THE EXACT LOCATION OF ALL EXISTING UTILITIES BEFORE COMMENCING WORK, AND AGREES TO BE FULLY RESPONSIBLE FOR ANY AND ALL DAMAGES WHICH MIGHT BE OCCASIONED BY THE CONTRACTOR'S FAILURE TO EXACTLY LOCATE AND PRESERVE ANY AND ALL UNDERGROUND UTILITIES.
2. THE INFORMATION SHOWN ON THIS PLAN IS THE SOLE PROPERTY OF ALLEN & MAJOR ASSOCIATES, INC. IT'S INTENDED USE IS TO PROVIDE INFORMATION. ANY ALTERATION, MISUSE, OR RECALCULATION OF INFORMATION OR DATA WITHOUT THE EXPRESSED, WRITTEN CONSENT OF ALLEN & MAJOR ASSOCIATES, INC. IS STRICTLY PROHIBITED.
3. THE CONTRACTOR SHALL CONTACT "DIGSAFE" AND THE TOWN OF HINGHAM DEPARTMENT OF PUBLIC WORKS AT LEAST 72 HOURS PRIOR TO ANY EXCAVATION WORK TO REQUEST THE LOCATION OF THE EXISTING UTILITIES.

   DIGSAFE: 1-800-344-7233
   HINGHAM DEPT. OF PUBLIC WORKS: 1-781-741-1430
4. SEE THE ABBREVIATIONS AND NOTES PLAN AND DETAILS FOR FURTHER INFORMATION.
5. ALL CURBING RADII SHALL BE 3' UNLESS OTHERWISE NOTED.
6. THE CONTRACTOR SHALL REVIEW THE RECORD PLAN ENTITLED "BUILDING DEMOLITION AND DEBRIS DISPOSAL AREA PLAN" OF 1988 AND VERIFY, IN THE FIELD, THE ELEVATION AND LOCATION OF THE DEBRIS AND STUMP BURIAL AREA. SPECIAL PRECAUTIONS SHALL BE TAKEN TO ENSURE THIS AREA IS NOT DISTURBED DURING CONSTRUCTION.
7. TOWN OF HINGHAM SPORTS FIELD INFORMATION IS BASED ON RECORD PLANS.
8. ALL SIGNED AND PAVEMENT MARKINGS WITHIN THE PROJECT SITE SHALL CONFORM TO THE APPLICABLE SPECIFICATIONS OF THE MANUAL OF UNIFORM TRAFFIC CONTROL DEVICES (MUTCD).

GRAPHIC SCALE

40 0 20 40 80 160

(IN FEET)
1 inch = 40 ft.

N:\PROJECTS\2118-02\CIVIL\DRAWINGS\CURRENT\C-2118-02 - LAYOUT & MATERIALS.DWG

DIG SAFE

BEFORE YOU DIG CALL 811 OR 1-888-DIG-SAFE 1-888-344-7233

TOWN OF HINGHAM LIST OF WAIVERS:

SECTION III-A-1.5 – SCHEDULE OF USES
- WAIVER OF THE PROHIBITION OF MULTI-FAMILY DWELLINGS IN THE OFFICE PARK DISTRICT.

SECTION IV-A – SCHEDULE OF DIMENSIONAL REQUIREMENTS
- WAIVER TO ALLOW FOR A MAXIMUM BUILDING HEIGHT OF 35 FEET (50.33'±).
- WAIVER TO ALLOW FOR A MAXIMUM FLOOR AREA RATIO OF 0.15 (0.60).
- WAIVER TO ALLOW FOR A MINIMUM FRONT YARD SETBACK OF 100 FEET (85.5 FEET).

SECTION IV-B-5 – SPECIAL REQUIREMENTS TO SCHEDULE OF DIMENSIONAL REQUIREMENTS
- WAIVER FOR A MINIMUM OF 20 FEET OF GREEN SPACE AROUND THE PERIMETER OF THE PROPERTY.

SECTION IV-B-6
- WAIVER TO ALLOW SITE PLAN REVIEW TO BE PERFORMED BY THE PLANNING BOARD.

SECTION IV-C-4 – GENERAL INTENSITY PROVISIONS
- WAIVER TO ALLOW MORE THAN ONE DWELLING UNIT PER ANY SINGLE LOT (200).

SECTION IV-E-1B – RESIDENTIAL MULTI-UNIT DEVELOPMENT
- WAIVER TO ALLOW THE NUMBER OF DWELLING UNITS PER ACRE TO BE MORE THAN 8 (18.2 UNITS/ACRE)

SECTION IV-E-1D
- WAIVER FROM PROVIDING 2000 S.F. OF LANDSCAPED SPACE PER DWELLING UNIT.

SECTION IV-E-1E
- WAIVER FROM PROVIDING 300 S.F. OF RECREATIONAL SPACE PER DWELLING UNIT.

SECTION IV-E-1F
- WAIVER FROM PROVIDING 50 FEET OF LANDSCAPED BUFFER ADJACENT TO EACH PROPERTY LINE.

SECTION IV-E-1G
- WAIVER FROM PROVIDING 300 S.F. OF RECREATIONAL SPACE PER DWELLING UNIT.

SECTION IV-E-1I
- WAIVER ALLOWING LESS THAN TWO PARKING SPACES PER DWELLING UNIT (1.55 STALLS/UNIT).

SECTION IV-E-5E
- WAIVER TO DEFER TO CURRENT DHCD LOCAL PREFERENCE CATEGORIES.

SECTION V-A-2 – OFF-STREET PARKING REQUIREMENTS
- WAIVER FROM A MINIMUM OF 2.0 PARKING STALLS PER UNIT (1.55 STALLS/UNIT).

SECTION V-A-3 – OFF-STREET PARKING REQUIREMENTS
- WAIVER FROM MINIMUM AISLE WIDTH FOR A PARKING STALL WITH NO OVERHANG

SECTION V-C-1A – EARTH REMOVAL REGULATIONS
- WAIVER ALLOWING THE REMOVAL OF SOIL, LOAM, SAND, GRAVEL, ETC. TO BE REMOVED FROM A LOT.

ARTICLE 10 – PUBLIC WAYS AND COMMON LAND
- WAIVER TO HAVE THE ZONING BOARD OF APPEALS BE THE PERMIT ISSUING AUTHORITY INSTEAD OF THE BOARD OF SELECTMEN.

ARTICLE 10-34A
- WAIVER ALLOWING SOIL, LOAM, SAND, OR GRAVEL FROM LAND IN TOWN NOT IN PUBLIC USE TO ANY LOCATIONS OUTSIDE OF THE TOWN.

ARTICLE 22-5
- WAIVER FROM THE CONSERVATION COMMISSION HAVING THE AUTHORIZATION TO DENY THE PROJECT

ARTICLE 22-8
- WAIVER REQUESTED AS A BOND IS ALREADY REQUIRED OF THE APPLICANT AS PART OF THE 40B PROCESS.

COMMONWEALTH OF MASSACHUSETTS
CARLTON M. QUINN
CIVIL
No. 49923
REGISTERED PROFESSIONAL ENGINEER

PROFESSIONAL ENGINEER FOR
ALLEN & MAJOR ASSOCIATES, INC.

REV	DATE	DESCRIPTION
3.	01/04/2017	ISSUED FOR ZBA RESUBMITTAL
2.	11/2/2016	ISSUED FOR ZBA RESUBMITTAL
1.	10/25/2016	ISSUED FOR ZBA RESUBMITTAL

APPLICANT\OWNER:
BROADSTONE BARE COVE ALLIANCE, LLC. C/O
ALLIANCE RESIDENTIAL COMPANY
184 HIGH STREET, SUITE 401
BOSTON, MA 02110

PROJECT:
BROADSTONE BARE COVE
230 BEAL STREET
HINGHAM, MA

PROJECT NO.	2118-02	DATE:	08-12-2016
SCALE:	1" = 40'	DWG. NAME:	C2118-02
DESIGNED BY:	SJL	CHECKED BY:	CMQ

PREPARED BY:
ALLEN & MAJOR ASSOCIATES, INC.
civil & structural engineering ◆ land surveying
environmental consulting ◆ landscape architecture
www.allenmajor.com
100 COMMERCE WAY
P.O. BOX 2118
WOBURN MA 01888-0118
TEL: (781) 935-6889
FAX: (781) 935-2896
WOBURN, MA ◆ LAKEVILLE, MA ◆ MANCHESTER, NH

THIS DRAWING HAS BEEN PREPARED IN ELECTRONIC FORMAT. CLIENT/CLIENT'S REPRESENTATIVE OR CONSULTANT MAY BE PROVIDED COPIES OF DRAWINGS AND SPECIFICATIONS ON MAGNETIC MEDIA FOR HIS/HER INFORMATION AND USE FOR SPECIFIC APPLICATION TO THIS PROJECT. DUE TO THE POTENTIAL THAT THE MAGNETIC INFORMATION MAY BE MODIFIED UNINTENTIONALLY OR OTHERWISE, ALLEN & MAJOR ASSOCIATES, INC. MAY REMOVE ALL INDICATION OF THE DOCUMENT'S AUTHORSHIP ON THE MAGNETIC MEDIA. PRINTED REPRESENTATIONS OF THE DRAWINGS AND SPECIFICATIONS ISSUED SHALL BE THE ONLY RECORD COPIES OF ALLEN & MAJOR ASSOCIATES, INC.'S WORK PRODUCT.

DRAWING TITLE:
LAYOUT & MATERIALS PLAN

SHEET No.
C-2A

Copyright©2017 Allen & Major Associates, Inc.
All Rights Reserved

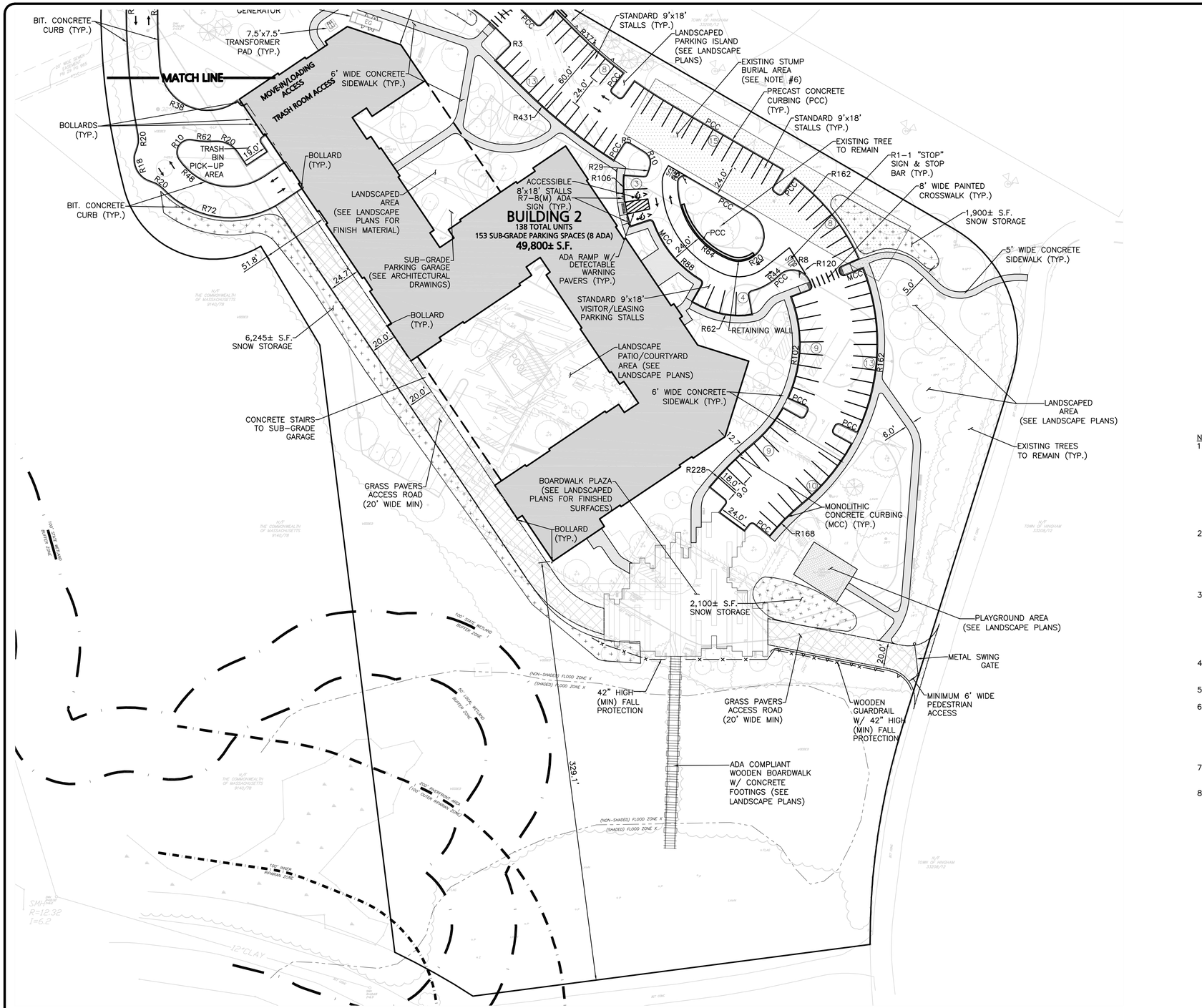

LEGEND:

- PROP. PROPERTY LINE
- SIGN
- BOLLARD
- BUILDING
- BUILDING ARCHITECTURE
- BUILDING INTERIOR WALLS
- CURB
- RETAINING WALL
- PARKING STRIPING
- ROADWAY STRIPING
- TRAFFIC ARROWS
- HEAVY DUTY CONCRETE
- SIDEWALK
- FIRE ACCESS (GRASS PAVERS)
- PERVIOUS PAVERS
- ADA ACCESSIBLE RAMP
- ADA DET. WARNING SURFACE
- TRANSFORMER
- PARKING COUNT
- SNOW STORAGE
- WOOD GUARDRAIL
- CHAIN LINK FENCE
- WOOD FENCE
- DECORATIVE FENCE

NOTES:

1. THE LOCATIONS OF EXISTING UNDERGROUND UTILITIES ARE SHOWN IN AN APPROXIMATE WAY ONLY AND HAVE NOT BEEN INDEPENDENTLY VERIFIED BY THE OWNER OR IT'S REPRESENTATIVE. THE CONTRACTOR SHALL DETERMINE THE EXACT LOCATION OF ALL EXISTING UTILITIES BEFORE COMMENCING WORK, AND AGREES TO BE FULLY RESPONSIBLE FOR ANY AND ALL DAMAGES WHICH MIGHT BE OCCASIONED BY THE CONTRACTOR'S FAILURE TO EXACTLY LOCATE AND PRESERVE ANY AND ALL UNDERGROUND UTILITIES.
2. THE INFORMATION SHOWN ON THIS PLAN IS THE SOLE PROPERTY OF ALLEN & MAJOR ASSOCIATES, INC. IT'S INTENDED USE IS TO PROVIDE INFORMATION. ANY ALTERATION, MISUSE, OR RECALCULATION OF INFORMATION OR DATA WITHOUT THE EXPRESSED, WRITTEN CONSENT OF ALLEN & MAJOR ASSOCIATES, INC. IS STRICTLY PROHIBITED.
3. THE CONTRACTOR SHALL CONTACT "DIGSAFE" AND THE TOWN OF HINGHAM DEPARTMENT OF PUBLIC WORKS AT LEAST 72 HOURS PRIOR TO ANY EXCAVATION WORK TO REQUEST THE LOCATION OF THE EXISTING UTILITIES.

   DIGSAFE: 1-800-344-7233
   HINGHAM DEPT. OF PUBLIC WORKS: 1-781-741-1430
4. SEE THE ABBREVIATIONS AND NOTES PLAN AND DETAILS FOR FURTHER INFORMATION.
5. ALL CURBING RADII SHALL BE 3' UNLESS OTHERWISE NOTED.
6. THE CONTRACTOR SHALL REVIEW THE RECORD PLAN ENTITLED "BUILDING DEMOLITION AND DEBRIS DISPOSAL AREA PLAN" OF 1988 AND VERIFY, IN THE FIELD, THE ELEVATION AND LOCATION OF THE DEBRIS AND STUMP BURIAL AREA. SPECIAL PRECAUTIONS SHALL BE TAKEN TO ENSURE THIS AREA IS NOT DISTURBED DURING CONSTRUCTION.
7. TOWN OF HINGHAM SPORTS FIELD INFORMATION IS BASED ON RECORD PLANS.
8. ALL SIGNED AND PAVEMENT MARKINGS WITHIN THE PROJECT SITE SHALL CONFORM TO THE APPLICABLE SPECIFICATIONS OF THE MANUAL OF UNIFORM TRAFFIC CONTROL DEVICES (MUTCD).

DIG SAFE

BEFORE YOU DIG
CALL 811 OR
1-888-DIG-SAFE
1-888-344-7233

GRAPHIC SCALE

40 0 20 40 80 160

(IN FEET)
1 inch = 40 ft.

N:\PROJECTS\2118-02\CIVIL\DRAWINGS\CURRENT\C-2118-02 - LAYOUT & MATERIALS.DWG

TOWN OF HINGHAM LIST OF WAIVERS:

SECTION III-A-1.5 - SCHEDULE OF USES
- WAIVER OF THE PROHIBITION OF MULTI-FAMILY DWELLINGS IN THE OFFICE PARK DISTRICT.

SECTION IV-A - SCHEDULE OF DIMENSIONAL REQUIREMENTS
- WAIVER TO ALLOW FOR A MAXIMUM BUILDING HEIGHT OF 35 FEET (50.33'±).
- WAIVER TO ALLOW FOR A MAXIMUM FLOOR AREA RATIO OF 0.15 (0.60).
- WAIVER TO ALLOW FOR A MINIMUM FRONT YARD SETBACK OF 100 FEET (85.5 FEET).

SECTION IV-B-5 - SPECIAL REQUIREMENTS TO SCHEDULE OF DIMENSIONAL REQUIREMENTS
- WAIVER FOR A MINIMUM OF 20 FEET OF GREEN SPACE AROUND THE PERIMETER OF THE PROPERTY.

SECTION IV-B-6
- WAIVER TO ALLOW SITE PLAN REVIEW TO BE PERFORMED BY THE PLANNING BOARD.

SECTION IV-C-4 - GENERAL INTENSITY PROVISIONS
- WAIVER TO ALLOW MORE THAN ONE DWELLING UNIT PER ANY SINGLE LOT (200).

SECTION IV-E-1B - RESIDENTIAL MULTI-UNIT DEVELOPMENT
- WAIVER TO ALLOW THE NUMBER OF DWELLING UNITS PER ACRE TO BE MORE THAN 8 (18.2 UNITS/ACRE)

SECTION IV-E-1D
- WAIVER FROM PROVIDING 2000 S.F. OF LANDSCAPED SPACE PER DWELLING UNIT.

SECTION IV-E-1E
- WAIVER FROM PROVIDING 300 S.F. OF RECREATIONAL SPACE PER DWELLING UNIT.

SECTION IV-E-1F
- WAIVER FROM PROVIDING 50 FEET OF LANDSCAPED BUFFER ADJACENT TO EACH PROPERTY LINE.

SECTION IV-E-1G
- WAIVER FROM PROVIDING 300 S.F. OF RECREATIONAL SPACE PER DWELLING UNIT.

SECTION IV-E-1I
- WAIVER ALLOWING LESS THAN TWO PARKING SPACES PER DWELLING UNIT (1.55 STALLS/UNIT).

SECTION IV-E-5E
- WAIVER TO DEFER TO CURRENT DHCD LOCAL PREFERENCE CATEGORIES.

SECTION V-A-2 - OFF-STREET PARKING REQUIREMENTS
- WAIVER FROM A MINIMUM OF 2.0 PARKING STALLS PER UNIT (1.55 STALLS/UNIT).

SECTION V-A-3 - OFF-STREET PARKING REQUIREMENTS
- WAIVER FROM MINIMUM AISLE WIDTH FOR A PARKING STALL WITH NO OVERHANG

SECTION V-C-1A - EARTH REMOVAL REGULATIONS
- WAIVER ALLOWING THE REMOVAL OF SOIL, LOAM, SAND, GRAVEL, ETC. TO BE REMOVED FROM A LOT.

ARTICLE 10 - PUBLIC WAYS AND COMMON LAND
- WAIVER TO HAVE THE ZONING BOARD OF APPEALS BE THE PERMIT ISSUING AUTHORITY INSTEAD OF THE BOARD OF SELECTMEN.

ARTICLE 10-34A
- WAIVER ALLOWING SOIL, LOAM, SAND, OR GRAVEL FROM LAND IN TOWN NOT IN PUBLIC USE TO ANY LOCATIONS OUTSIDE OF THE TOWN.

ARTICLE 22-5
- WAIVER FROM THE CONSERVATION COMMISSION HAVING THE AUTHORIZATION TO DENY THE PROJECT

ARTICLE 22-8
- WAIVER REQUESTED AS A BOND IS ALREADY REQUIRED OF THE APPLICANT AS PART OF THE 40B PROCESS.

COMMONWEALTH OF MASSACHUSETTS
CARLTON M. QUINN
CIVIL
No.49923
REGISTERED PROFESSIONAL ENGINEER

PROFESSIONAL ENGINEER FOR
ALLEN & MAJOR ASSOCIATES, INC.

REV	DATE	DESCRIPTION
3.	01/04/2017	ISSUED FOR ZBA RESUBMITTAL
2.	11/2/2016	ISSUED FOR ZBA RESUBMITTAL
1.	10/25/2016	ISSUED FOR ZBA RESUBMITTAL

APPLICANT\OWNER:
BROADSTONE BARE COVE ALLIANCE, LLC. C/O
ALLIANCE RESIDENTIAL COMPANY
184 HIGH STREET, SUITE 401
BOSTON, MA 02110

PROJECT:
BROADSTONE BARE COVE
230 BEAL STREET
HINGHAM, MA

PROJECT NO.	2118-02	DATE:	08-12-2016
SCALE:	1" = 40'	DWG. NAME:	C2118-02
DESIGNED BY:	SJL	CHECKED BY:	CMQ

PREPARED BY:

ALLEN & MAJOR ASSOCIATES, INC.
civil & structural engineering ◆ land surveying
environmental consulting ◆ landscape architecture
www.allenmajor.com
100 COMMERCE WAY
P.O. BOX 2118
WOBURN MA 01888-0118
TEL: (781) 935-6889
FAX: (781) 935-2896
WOBURN, MA ◆ LAKEVILLE, MA ◆ MANCHESTER, NH

THIS DRAWING HAS BEEN PREPARED IN ELECTRONIC FORMAT. CLIENT/CLIENT'S REPRESENTATIVE OR CONSULTANT MAY BE PROVIDED COPIES OF DRAWINGS AND SPECIFICATIONS ON MAGNETIC MEDIA FOR HIS/HER INFORMATION AND USE FOR SPECIFIC APPLICATION TO THIS PROJECT. DUE TO THE POTENTIAL THAT THE MAGNETIC INFORMATION MAY BE MODIFIED UNINTENTIONALLY OR OTHERWISE, ALLEN & MAJOR ASSOCIATES, INC. MAY REMOVE ALL INDICATION OF THE DOCUMENT'S AUTHORSHIP ON THE MAGNETIC MEDIA. PRINTED REPRESENTATIONS OF THE DRAWINGS AND SPECIFICATIONS ISSUED SHALL BE THE ONLY RECORD COPIES OF ALLEN & MAJOR ASSOCIATES, INC.'S WORK PRODUCT.

DRAWING TITLE:
LAYOUT & MATERIALS PLAN

SHEET No.
C-2B

Copyright©2017 Allen & Major Associates, Inc.
All Rights Reserved

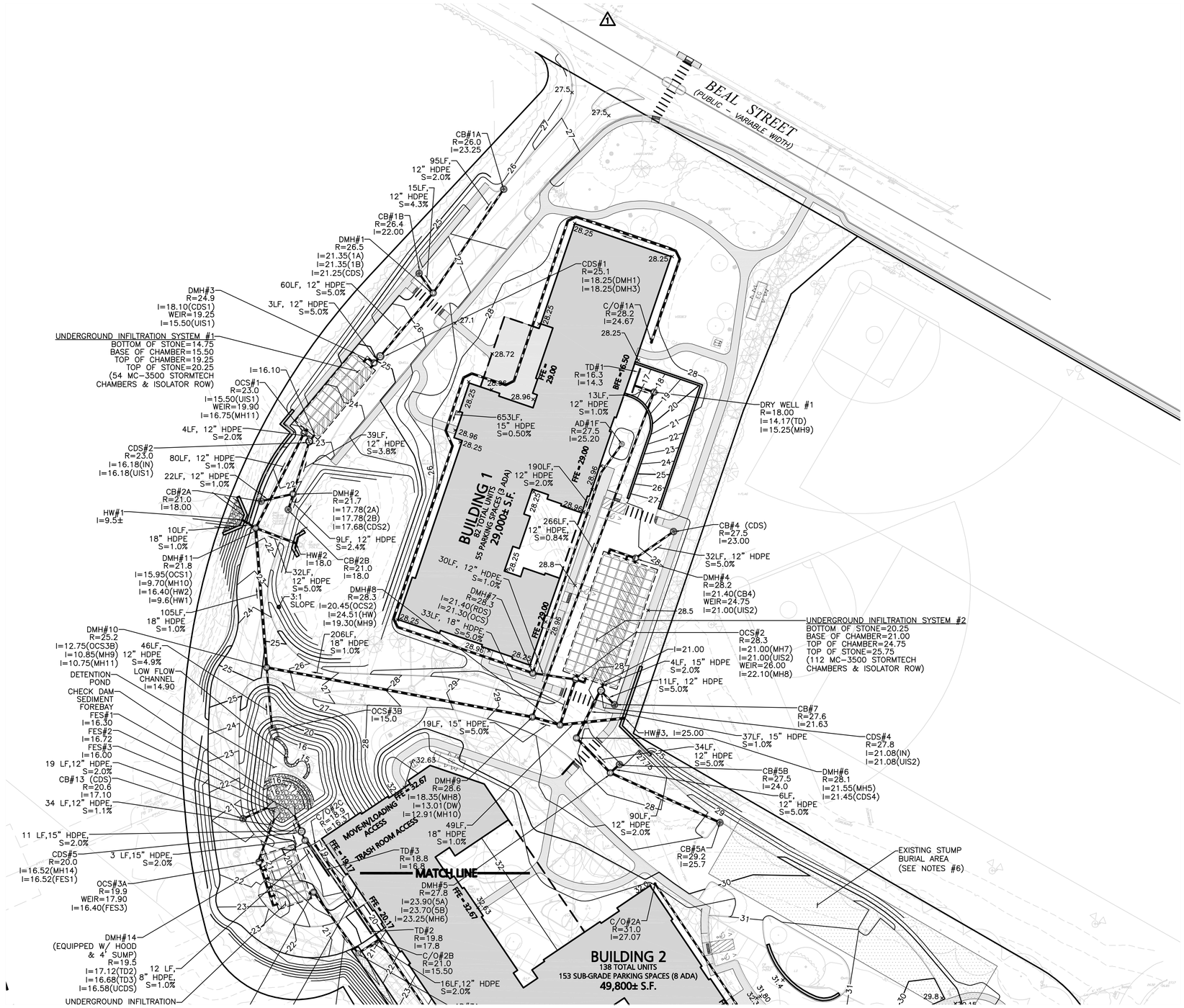

LEGEND:

- DRAIN MANHOLE (DMH)
- OUTLET CONTROL STRUCTURE (OCS)
- CONTECH CDS UNIT (CDS)
- STORAGE TANK
- PUMP CHAMBER
- CATCH BASIN (CB)
- AREA DRAIN (AD)
- CLEAN OUT (CO)
- FLARED END SECTION (FES)
- DRAIN LINE
- RIPRAP OUTFALL
- HEADWALL
- 5' CONTOUR — 30 —
- 1' CONTOUR — 31 —
- SPOT GRADE ×128
- LIMIT OF INFILTRATION STONE
- INFILTRATION CHAMBERS
- ISOLATOR ROW
- DRAINAGE SWALE

NOTES:

1. THE LOCATIONS OF EXISTING UNDERGROUND UTILITIES ARE SHOWN IN AN APPROXIMATE WAY ONLY AND HAVE NOT BEEN INDEPENDENTLY VERIFIED BY THE OWNER OR IT'S REPRESENTATIVE. THE CONTRACTOR SHALL DETERMINE THE EXACT LOCATION OF ALL EXISTING UTILITIES BEFORE COMMENCING WORK, AND AGREES TO BE FULLY RESPONSIBLE FOR ANY AND ALL DAMAGES WHICH MIGHT BE OCCASIONED BY THE CONTRACTOR'S FAILURE TO EXACTLY LOCATE AND PRESERVE ANY AND ALL UNDERGROUND UTILITIES.

2. THE INFORMATION SHOWN ON THIS PLAN IS THE SOLE PROPERTY OF ALLEN & MAJOR ASSOCIATES, INC. IT'S INTENDED USE IS TO PROVIDE INFORMATION. ANY ALTERATION, MISUSE, OR RECALCULATION OF INFORMATION OR DATA WITHOUT THE EXPRESSED, WRITTEN CONSENT OF ALLEN & MAJOR ASSOCIATES, INC. IS STRICTLY PROHIBITED.

3. PIPE DIMENSIONS ARE MEASURED FROM THE INSIDE FACE OF THE STRUCTURE.

4. THE SIZE AND LOCATION OF EXISTING ROOF LEADERS SHALL BE CONFIRMED BY THE CONTRACTOR IN THE FIELD.

5. THE ELEVATIONS ON THIS PLAN ARE BASED ON THE NORTH AMERICAN VERTICAL DATUM OF 1988 (NAVD88). SEE EXISTING CONDITIONS PLANS.

6. THE CONTRACTOR SHALL CONTACT "DIGSAFE" AND THE AT LEAST 72 HOURS PRIOR TO ANY EXCAVATION WORK TO REQUEST THE LOCATION OF THE EXISTING UTILITIES. DIGSAFE: 1-888-344-7233.

7. THE CONTRACTOR SHALL REVIEW THE RECORD PLAN ENTITLED "BUILDING DEMOLITION AND DEBRIS DISPOSAL AREA PLAN" OF 1988 AND VERIFY, IN THE FIELD, THE ELEVATION AND LOCATION OF THE DEBRIS AND STUMP BURIAL AREA. SPECIAL PRECAUTIONS SHALL BE TAKEN TO ENSURE THIS AREA IS NOT DISTURBED DURING CONSTRUCTION.

DIG SAFE

BEFORE YOU DIG
CALL 811 OR
1-888-DIG-SAFE
1-888-344-7233

BENCHMARK SUMMARY		
TBM #	DESCRIPTION	ELEV.
1	X CUT IN HYDRANT SPINDLE	29.57

GRAPHIC SCALE

40 0 20 40 80 160

(IN FEET)
1 inch = 40 ft.

N:\PROJECTS\2118-02\CIVIL\DRAWINGS\CURRENT\C-2118-02 – GRADING & DRAINAGE.DWG

TOWN OF HINGHAM LIST OF WAIVERS:

SECTION III-A-1.5 – SCHEDULE OF USES
- WAIVER OF THE PROHIBITION OF MULTI-FAMILY DWELLINGS IN THE OFFICE PARK DISTRICT.

SECTION IV-A – SCHEDULE OF DIMENSIONAL REQUIREMENTS
- WAIVER TO ALLOW FOR A MAXIMUM BUILDING HEIGHT OF 35 FEET (50.33'±).
- WAIVER TO ALLOW FOR A MAXIMUM FLOOR AREA RATIO OF 0.15 (0.60).
- WAIVER TO ALLOW FOR A MINIMUM FRONT YARD SETBACK OF 100 FEET (85.5 FEET).

SECTION IV-B-5 – SPECIAL REQUIREMENTS TO SCHEDULE OF DIMENSIONAL REQUIREMENTS
- WAIVER FOR A MINIMUM OF 20 FEET OF GREEN SPACE AROUND THE PERIMETER OF THE PROPERTY.

SECTION IV-B-6
- WAIVER TO ALLOW SITE PLAN REVIEW TO BE PERFORMED BY THE PLANNING BOARD.

SECTION IV-C-4 – GENERAL INTENSITY PROVISIONS
- WAIVER TO ALLOW MORE THAN ONE DWELLING UNIT PER ANY SINGLE LOT (200).

SECTION IV-E-1B – RESIDENTIAL MULTI-UNIT DEVELOPMENT
- WAIVER TO ALLOW THE NUMBER OF DWELLING UNITS PER ACRE TO BE MORE THAN 8 (18.2 UNITS/ACRE)

SECTION IV-E-1D
- WAIVER FROM PROVIDING 2000 S.F. OF LANDSCAPED SPACE PER DWELLING UNIT.

SECTION IV-E-1E
- WAIVER FROM PROVIDING 300 S.F. OF RECREATIONAL SPACE PER DWELLING UNIT.

SECTION IV-E-1F
- WAIVER FROM PROVIDING 50 FEET OF LANDSCAPED BUFFER ADJACENT TO EACH PROPERTY LINE.

SECTION IV-E-1G
- WAIVER FROM PROVIDING 300 S.F. OF RECREATIONAL SPACE PER DWELLING UNIT.

SECTION IV-E-1I
- WAIVER ALLOWING LESS THAN TWO PARKING SPACES PER DWELLING UNIT (1.55 STALLS/UNIT).

SECTION IV-E-5E
- WAIVER TO DEFER TO CURRENT DHCD LOCAL PREFERENCE CATEGORIES.

SECTION V-A-2 – OFF-STREET PARKING REQUIREMENTS
- WAIVER FROM A MINIMUM OF 2.0 PARKING STALLS PER UNIT (1.55 STALLS/UNIT).

SECTION V-A-3 – OFF-STREET PARKING REQUIREMENTS
- WAIVER FROM MINIMUM AISLE WIDTH FOR A PARKING STALL WITH NO OVERHANG

SECTION V-C-1A – EARTH REMOVAL REGULATIONS
- WAIVER ALLOWING THE REMOVAL OF SOIL, LOAM, SAND, GRAVEL, ETC. TO BE REMOVED FROM A LOT.

ARTICLE 10 – PUBLIC WAYS AND COMMON LAND
- WAIVER TO HAVE THE ZONING BOARD OF APPEALS BE THE PERMIT ISSUING AUTHORITY INSTEAD OF THE BOARD OF SELECTMEN.

ARTICLE 10-34A
- WAIVER ALLOWING SOIL, LOAM, SAND, OR GRAVEL FROM LAND IN TOWN NOT IN PUBLIC USE TO ANY LOCATIONS OUTSIDE OF THE TOWN.

ARTICLE 22-5
- WAIVER FROM THE CONSERVATION COMMISSION HAVING THE AUTHORIZATION TO DENY THE PROJECT

ARTICLE 22-8
- WAIVER REQUESTED AS A BOND IS ALREADY REQUIRED OF THE APPLICANT AS PART OF THE 40B PROCESS.

ISSUED FOR DRAINAGE REPORT
JANUARY 10, 2016

PROFESSIONAL ENGINEER FOR
ALLEN & MAJOR ASSOCIATES, INC.

REV	DATE	DESCRIPTION
3.	01/04/2017	ISSUED FOR ZBA RESUBMITTAL
2.	11/2/2016	ISSUED FOR ZBA RESUBMITTAL
1.	10/25/2016	ISSUED FOR ZBA RESUBMITTAL

APPLICANT\OWNER:
BROADSTONE BARE COVE ALLIANCE, LLC. C/O
ALLIANCE RESIDENTIAL COMPANY
184 HIGH STREET, SUITE 401
BOSTON, MA 02110

PROJECT:
BROADSTONE BARE COVE
230 BEAL STREET
HINGHAM, MA

PROJECT NO.	2118-02	DATE:	08-12-2016
SCALE:	1" = 40'	DWG. NAME:	C2118-02
DESIGNED BY:	SJL	CHECKED BY:	CMQ

PREPARED BY:
ALLEN & MAJOR ASSOCIATES, INC.
civil & structural engineering ◆ land surveying
environmental consulting ◆ landscape architecture
www.allenmajor.com
100 COMMERCE WAY
P.O. BOX 2118
WOBURN MA 01888-0118
TEL: (781) 935-6889
FAX: (781) 935-2896
WOBURN, MA ◆ LAKEVILLE, MA ◆ MANCHESTER, NH

THIS DRAWING HAS BEEN PREPARED IN ELECTRONIC FORMAT. CLIENT/CLIENT'S REPRESENTATIVE OR CONSULTANT MAY BE PROVIDED COPIES OF DRAWINGS AND SPECIFICATIONS ON MAGNETIC MEDIA FOR HIS/HER INFORMATION AND USE FOR SPECIFIC APPLICATION TO THIS PROJECT. DUE TO THE POTENTIAL THAT THE MAGNETIC INFORMATION MAY BE MODIFIED UNINTENTIONALLY OR OTHERWISE, ALLEN & MAJOR ASSOCIATES, INC. MAY REMOVE ALL INDICATION OF THE DOCUMENT'S AUTHORSHIP ON THE MAGNETIC MEDIA. PRINTED REPRESENTATIONS OF THE DRAWINGS AND SPECIFICATIONS ISSUED SHALL BE THE ONLY RECORD COPIES OF ALLEN & MAJOR ASSOCIATES, INC.'S WORK PRODUCT.

DRAWING TITLE:
GRADING & DRAINAGE PLAN

SHEET No.
C-3A

Copyright©2017 Allen & Major Associates, Inc.
All Rights Reserved

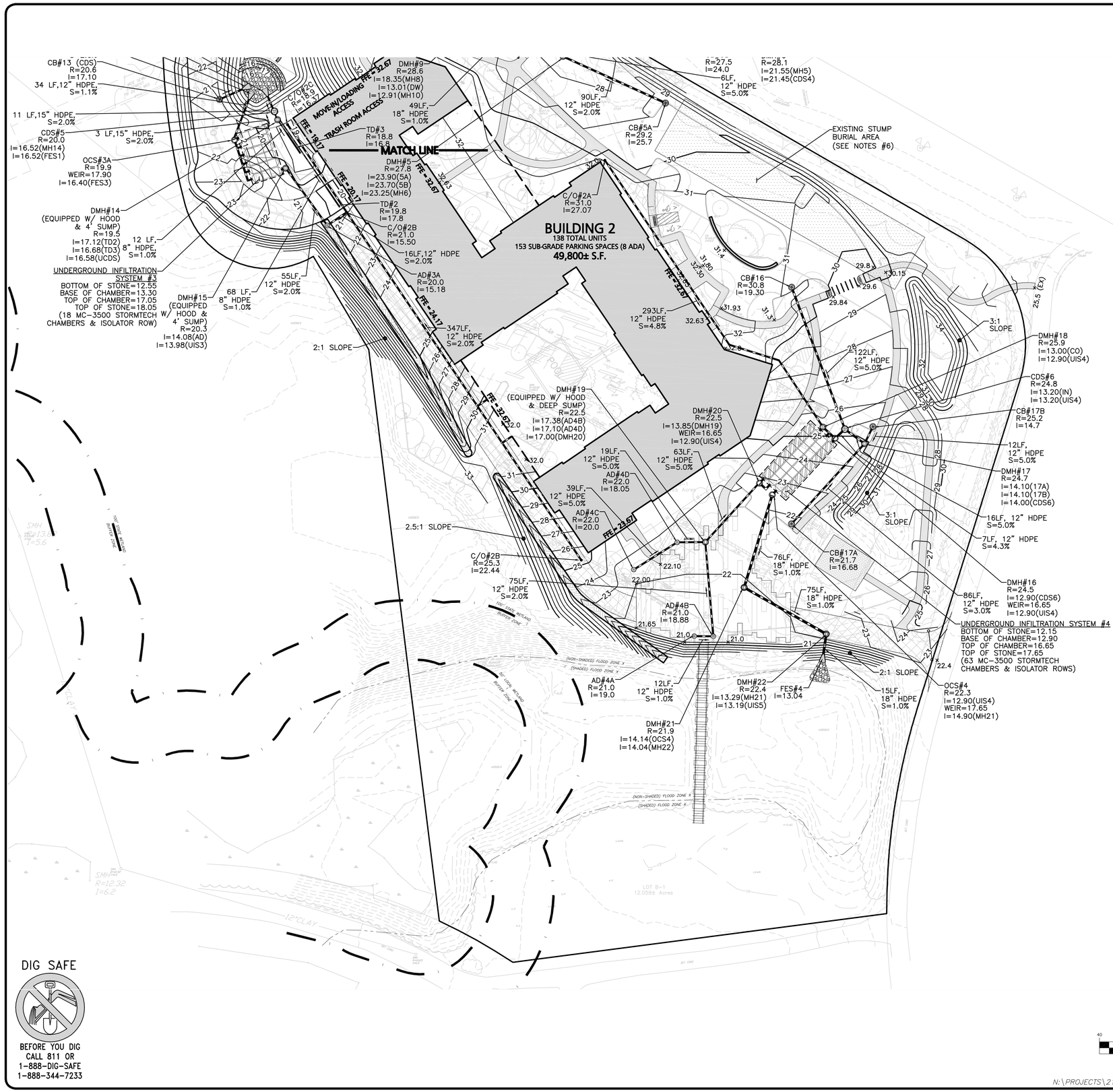

LEGEND:

- DRAIN MANHOLE (DMH)
- OUTLET CONTROL STRUCTURE (OCS)
- CONTECH CDS UNIT (CDS)
- STORAGE TANK
- PUMP CHAMBER
- CATCH BASIN (CB)
- AREA DRAIN (AD)
- CLEAN OUT (CO)
- FLARED END SECTION (FES)
- DRAIN LINE
- RIPRAP OUTFALL
- HEADWALL
- 5' CONTOUR — 30
- 1' CONTOUR — 31
- SPOT GRADE ×128
- LIMIT OF INFILTRATION STONE
- INFILTRATION CHAMBERS
- ISOLATOR ROW
- DRAINAGE SWALE

NOTES:

1. THE LOCATIONS OF EXISTING UNDERGROUND UTILITIES ARE SHOWN IN AN APPROXIMATE WAY ONLY AND HAVE NOT BEEN INDEPENDENTLY VERIFIED BY THE OWNER OR IT'S REPRESENTATIVE. THE CONTRACTOR SHALL DETERMINE THE EXACT LOCATION OF ALL EXISTING UTILITIES BEFORE COMMENCING WORK, AND AGREES TO BE FULLY RESPONSIBLE FOR ANY AND ALL DAMAGES WHICH MIGHT BE OCCASIONED BY THE CONTRACTOR'S FAILURE TO EXACTLY LOCATE AND PRESERVE ANY AND ALL UNDERGROUND UTILITIES.
2. THE INFORMATION SHOWN ON THIS PLAN IS THE SOLE PROPERTY OF ALLEN & MAJOR ASSOCIATES, INC. IT'S INTENDED USE IS TO PROVIDE INFORMATION. ANY ALTERATION, MISUSE, OR RECALCULATION OF INFORMATION OR DATA WITHOUT THE EXPRESSED, WRITTEN CONSENT OF ALLEN & MAJOR ASSOCIATES, INC. IS STRICTLY PROHIBITED.
3. PIPE DIMENSIONS ARE MEASURED FROM THE INSIDE FACE OF THE STRUCTURE.
4. THE SIZE AND LOCATION OF EXISTING ROOF LEADERS SHALL BE CONFIRMED BY THE CONTRACTOR IN THE FIELD.
5. THE ELEVATIONS ON THIS PLAN ARE BASED ON THE NORTH AMERICAN VERTICAL DATUM OF 1988 (NAVD88). SEE EXISTING CONDITIONS PLANS.
6. THE CONTRACTOR SHALL CONTACT "DIGSAFE" AND THE AT LEAST 72 HOURS PRIOR TO ANY EXCAVATION WORK TO REQUEST THE LOCATION OF THE EXISTING UTILITIES. DIGSAFE: 1-888-344-7233.
7. THE CONTRACTOR SHALL REVIEW THE RECORD PLAN ENTITLED "BUILDING DEMOLITION AND DEBRIS DISPOSAL AREA PLAN" OF 1988 AND VERIFY, IN THE FIELD, THE ELEVATION AND LOCATION OF THE DEBRIS AND STUMP BURIAL AREA. SPECIAL PRECAUTIONS SHALL BE TAKEN TO ENSURE THIS AREA IS NOT DISTURBED DURING CONSTRUCTION.

GRAPHIC SCALE

40 0 20 40 80 160

(IN FEET)
1 inch = 40 ft.

N:\PROJECTS\2118-02\CIVIL\DRAWINGS\CURRENT\C-2118-02 - GRADING & DRAINAGE.DWG

DIG SAFE

BEFORE YOU DIG
CALL 811 OR
1-888-DIG-SAFE
1-888-344-7233

TOWN OF HINGHAM LIST OF WAIVERS:

SECTION III-A-1.5 - SCHEDULE OF USES
- WAIVER OF THE PROHIBITION OF MULTI-FAMILY DWELLINGS IN THE OFFICE PARK DISTRICT.

SECTION IV-A - SCHEDULE OF DIMENSIONAL REQUIREMENTS
- WAIVER TO ALLOW FOR A MAXIMUM BUILDING HEIGHT OF 35 FEET (50.33'±).
- WAIVER TO ALLOW FOR A MAXIMUM FLOOR AREA RATIO OF 0.15 (0.60).
- WAIVER TO ALLOW FOR A MINIMUM FRONT YARD SETBACK OF 100 FEET (85.5 FEET).

SECTION IV-B-5 - SPECIAL REQUIREMENTS TO SCHEDULE OF DIMENSIONAL REQUIREMENTS
- WAIVER FOR A MINIMUM OF 20 FEET OF GREEN SPACE AROUND THE PERIMETER OF THE PROPERTY.

SECTION IV-B-6
- WAIVER TO ALLOW SITE PLAN REVIEW TO BE PERFORMED BY THE PLANNING BOARD.

SECTION IV-C-4 - GENERAL INTENSITY PROVISIONS
- WAIVER TO ALLOW MORE THAN ONE DWELLING UNIT PER ANY SINGLE LOT (200).

SECTION IV-E-1B - RESIDENTIAL MULTI-UNIT DEVELOPMENT
- WAIVER TO ALLOW THE NUMBER OF DWELLING UNITS PER ACRE TO BE MORE THAN 8 (18.2 UNITS/ACRE)

SECTION IV-E-1D
- WAIVER FROM PROVIDING 2000 S.F. OF LANDSCAPED SPACE PER DWELLING UNIT.

SECTION IV-E-1E
- WAIVER FROM PROVIDING 300 S.F. OF RECREATIONAL SPACE PER DWELLING UNIT.

SECTION IV-E-1F
- WAIVER FROM PROVIDING 50 FEET OF LANDSCAPED BUFFER ADJACENT TO EACH PROPERTY LINE.

SECTION IV-E-1G
- WAIVER FROM PROVIDING 300 S.F. OF RECREATIONAL SPACE PER DWELLING UNIT.

SECTION IV-E-1I
- WAIVER ALLOWING LESS THAN TWO PARKING SPACES PER DWELLING UNIT (1.55 STALLS/UNIT).

SECTION IV-E-5E
- WAIVER TO DEFER TO CURRENT DHCD LOCAL PREFERENCE CATEGORIES.

SECTION V-A-2 - OFF-STREET PARKING REQUIREMENTS
- WAIVER FROM A MINIMUM OF 2.0 PARKING STALLS PER UNIT (1.55 STALLS/UNIT).

SECTION V-A-3 - OFF-STREET PARKING REQUIREMENTS
- WAIVER FROM MINIMUM AISLE WIDTH FOR A PARKING STALL WITH NO OVERHANG

SECTION V-C-1A - EARTH REMOVAL REGULATIONS
- WAIVER ALLOWING THE REMOVAL OF SOIL, LOAM, SAND, GRAVEL, ETC. TO BE REMOVED FROM A LOT.

ARTICLE 10 - PUBLIC WAYS AND COMMON LAND
- WAIVER TO HAVE THE ZONING BOARD OF APPEALS BE THE PERMIT ISSUING AUTHORITY INSTEAD OF THE BOARD OF SELECTMEN.

ARTICLE 10-34A
- WAIVER ALLOWING SOIL, LOAM, SAND, OR GRAVEL FROM LAND IN TOWN NOT IN PUBLIC USE TO ANY LOCATIONS OUTSIDE OF THE TOWN.

ARTICLE 22-5
- WAIVER FROM THE CONSERVATION COMMISSION HAVING THE AUTHORIZATION TO DENY THE PROJECT

ARTICLE 22-8
- WAIVER REQUESTED AS A BOND IS ALREADY REQUIRED OF THE APPLICANT AS PART OF THE 40B PROCESS.

ISSUED FOR DRAINAGE REPORT
JANUARY 10, 2016

PROFESSIONAL ENGINEER FOR
ALLEN & MAJOR ASSOCIATES, INC.

REV	DATE	DESCRIPTION
3.	01/04/2017	ISSUED FOR ZBA RESUBMITTAL
2.	11/2/2016	ISSUED FOR ZBA RESUBMITTAL
1.	10/25/2016	ISSUED FOR ZBA RESUBMITTAL

APPLICANT\OWNER:
BROADSTONE BARE COVE ALLIANCE, LLC. C/O
ALLIANCE RESIDENTIAL COMPANY
184 HIGH STREET, SUITE 401
BOSTON, MA 02110

PROJECT:
BROADSTONE BARE COVE
230 BEAL STREET
HINGHAM, MA

PROJECT NO.	2118-02	DATE:	08-12-2016
SCALE:	1" = 40'	DWG. NAME:	C2118-02
DESIGNED BY:	SJL	CHECKED BY:	CMQ

PREPARED BY:

ALLEN & MAJOR ASSOCIATES, INC.
civil & structural engineering ◆ land surveying
environmental consulting ◆ landscape architecture
www.allenmajor.com
100 COMMERCE WAY
P.O. BOX 2118
WOBURN MA 01888-0118
TEL: (781) 935-6889
FAX: (781) 935-2896
WOBURN, MA ◆ LAKEVILLE, MA ◆ MANCHESTER, NH

THIS DRAWING HAS BEEN PREPARED IN ELECTRONIC FORMAT. CLIENT/CLIENT'S REPRESENTATIVE OR CONSULTANT MAY BE PROVIDED COPIES OF DRAWINGS AND SPECIFICATIONS ON MAGNETIC MEDIA FOR HIS/HER INFORMATION AND USE FOR SPECIFIC APPLICATION TO THIS PROJECT. DUE TO THE POTENTIAL THAT THE MAGNETIC INFORMATION MAY BE MODIFIED UNINTENTIONALLY OR OTHERWISE, ALLEN & MAJOR ASSOCIATES, INC. MAY REMOVE ALL INDICATION OF THE DOCUMENT'S AUTHORSHIP ON THE MAGNETIC MEDIA. PRINTED REPRESENTATIONS OF THE DRAWINGS AND SPECIFICATIONS ISSUED SHALL BE THE ONLY RECORD COPIES OF ALLEN & MAJOR ASSOCIATES, INC.'S WORK PRODUCT.

DRAWING TITLE:
GRADING & DRAINAGE PLAN

SHEET No.
C-3B

Copyright©2017 Allen & Major Associates, Inc.
All Rights Reserved

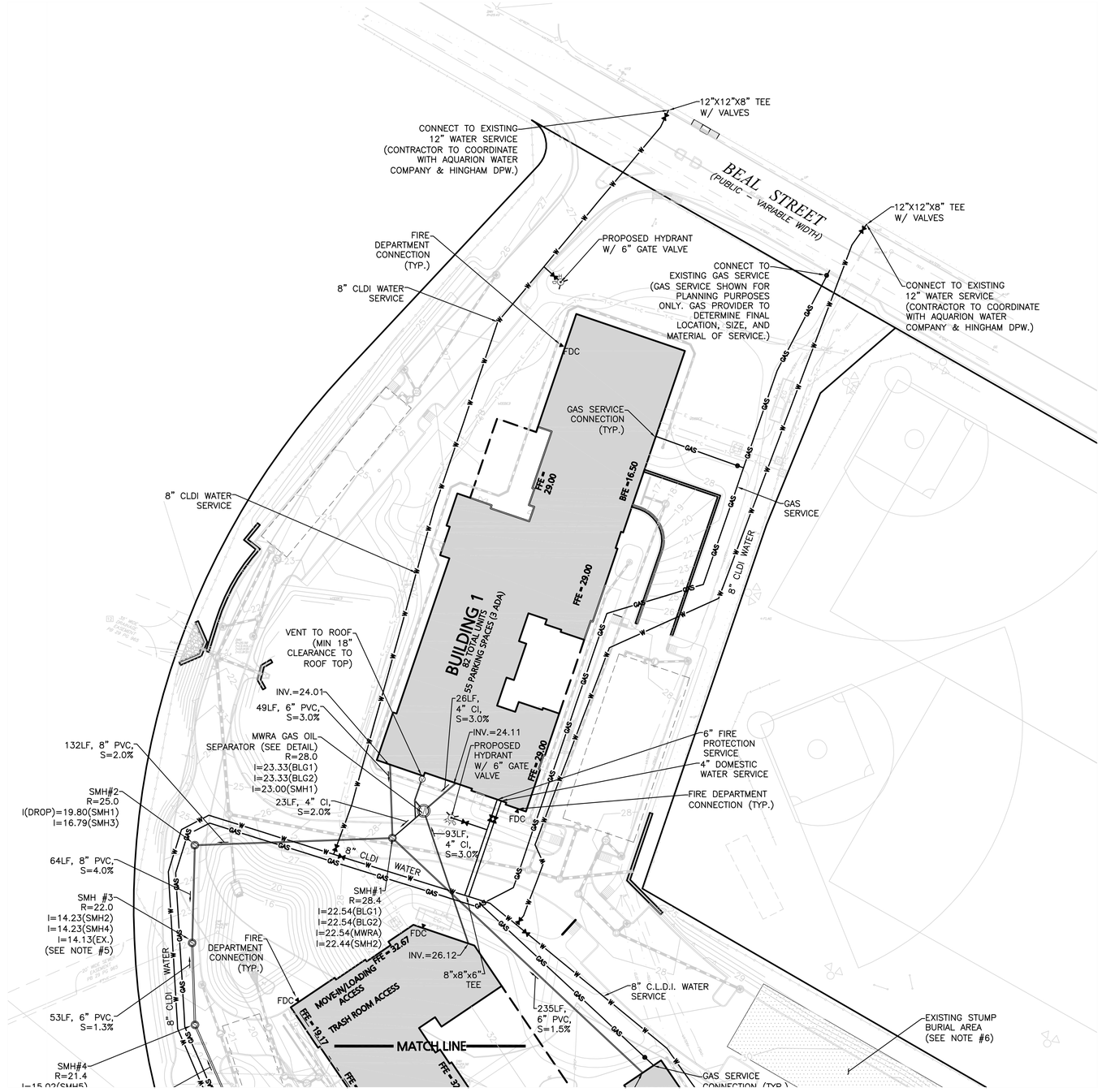

LEGEND:

- SEWER MANHOLE (SMH)
- SEWER CLEANOUT (CO)
- OIL/WATER SEPARATOR (OWS)
- SEWER VENT
- SEWER LINE
- WATER SERVICE
- POST INDICATOR VALVE (PIV)
- FIRE DEPT. CONNECTION — FDC
- WATER VALVE (WV)
- HYDRANT
- WATER LINE REDUCER
- GAS LINE
- GAS VALVE

NOTES:

1. THE LOCATIONS OF EXISTING UNDERGROUND UTILITIES ARE SHOWN IN AN APPROXIMATE WAY ONLY AND HAVE NOT BEEN INDEPENDENTLY VERIFIED BY THE OWNER OR IT'S REPRESENTATIVE. THE CONTRACTOR SHALL DETERMINE THE EXACT LOCATION OF ALL EXISTING UTILITIES BEFORE COMMENCING WORK, AND AGREES TO BE FULLY RESPONSIBLE FOR ANY AND ALL DAMAGES WHICH MIGHT BE OCCASIONED BY THE CONTRACTOR'S FAILURE TO EXACTLY LOCATE AND PRESERVE ANY AND ALL UNDERGROUND UTILITIES.
2. THE INFORMATION SHOWN ON THIS PLAN IS THE SOLE PROPERTY OF ALLEN & MAJOR ASSOCIATES, INC. IT'S INTENDED USE IS TO PROVIDE INFORMATION. ANY ALTERATION, MISUSE, OR RECALCULATION OF INFORMATION OR DATA WITHOUT THE EXPRESSED, WRITTEN CONSENT OF ALLEN & MAJOR ASSOCIATES, INC. IS STRICTLY PROHIBITED.
3. GAS SERVICE SIZE AND LOCATION SHALL BE DETERMINED BY SERVICE PROVIDER.
4. FIRE & DOMESTIC WATER SERVICE SIZE TO BE CONFIRMED BY MEP ENGINEER.
5. CONTRACTOR TO VERIFY WITH ENGINEER, IN WRITING, THAT EXISTING MANHOLE CAN BE MODIFIED AS ILLUSTRATED PRIOR TO START OF CONSTRUCTION.
6. THE CONTRACTOR SHALL REVIEW THE RECORD PLAN ENTITLED "BUILDING DEMOLITION AND DEBRIS DISPOSAL AREA PLAN" OF 1988 AND VERIFY, IN THE FIELD, THE ELEVATION AND LOCATION OF THE DEBRIS AND STUMP BURIAL AREA. SPECIAL PRECAUTIONS SHALL BE TAKEN TO ENSURE THIS AREA IS NOT DISTURBED DURING CONSTRUCTION.

DIG SAFE

BEFORE YOU DIG
CALL 811 OR
1-888-DIG-SAFE
1-888-344-7233

GRAPHIC SCALE

40 0 20 40 80 160

(IN FEET)
1 inch = 40 ft.

N:\PROJECTS\2118-02\CIVIL\DRAWINGS\CURRENT\C-2118-02 - UTILITIES.DWG

TOWN OF HINGHAM LIST OF WAIVERS:

SECTION III-A-1.5 - SCHEDULE OF USES
- WAIVER OF THE PROHIBITION OF MULTI-FAMILY DWELLINGS IN THE OFFICE PARK DISTRICT.

SECTION IV-A - SCHEDULE OF DIMENSIONAL REQUIREMENTS
- WAIVER TO ALLOW FOR A MAXIMUM BUILDING HEIGHT OF 35 FEET (50.33'±).
- WAIVER TO ALLOW FOR A MAXIMUM FLOOR AREA RATIO OF 0.15 (0.60).
- WAIVER TO ALLOW FOR A MINIMUM FRONT YARD SETBACK OF 100 FEET (85.5 FEET).

SECTION IV-B-5 - SPECIAL REQUIREMENTS TO SCHEDULE OF DIMENSIONAL REQUIREMENTS
- WAIVER FOR A MINIMUM OF 20 FEET OF GREEN SPACE AROUND THE PERIMETER OF THE PROPERTY.

SECTION IV-B-6
- WAIVER TO ALLOW SITE PLAN REVIEW TO BE PERFORMED BY THE PLANNING BOARD.

SECTION IV-C-4 - GENERAL INTENSITY PROVISIONS
- WAIVER TO ALLOW MORE THAN ONE DWELLING UNIT PER ANY SINGLE LOT (200).

SECTION IV-E-1B - RESIDENTIAL MULTI-UNIT DEVELOPMENT
- WAIVER TO ALLOW THE NUMBER OF DWELLING UNITS PER ACRE TO BE MORE THAN 8 (18.2 UNITS/ACRE)

SECTION IV-E-1D
- WAIVER FROM PROVIDING 2000 S.F. OF LANDSCAPED SPACE PER DWELLING UNIT.

SECTION IV-E-1E
- WAIVER FROM PROVIDING 300 S.F. OF RECREATIONAL SPACE PER DWELLING UNIT.

SECTION IV-E-1F
- WAIVER FROM PROVIDING 50 FEET OF LANDSCAPED BUFFER ADJACENT TO EACH PROPERTY LINE.

SECTION IV-E-1G
- WAIVER FROM PROVIDING 300 S.F. OF RECREATIONAL SPACE PER DWELLING UNIT.

SECTION IV-E-1I
- WAIVER ALLOWING LESS THAN TWO PARKING SPACES PER DWELLING UNIT (1.55 STALLS/UNIT).

SECTION IV-E-5E
- WAIVER TO DEFER TO CURRENT DHCD LOCAL PREFERENCE CATEGORIES.

SECTION V-A-2 - OFF-STREET PARKING REQUIREMENTS
- WAIVER FROM A MINIMUM OF 2.0 PARKING STALLS PER UNIT (1.55 STALLS/UNIT).

SECTION V-A-3 - OFF-STREET PARKING REQUIREMENTS
- WAIVER FROM MINIMUM AISLE WIDTH FOR A PARKING STALL WITH NO OVERHANG

SECTION V-C-1A - EARTH REMOVAL REGULATIONS
- WAIVER ALLOWING THE REMOVAL OF SOIL, LOAM, SAND, GRAVEL, ETC. TO BE REMOVED FROM A LOT.

ARTICLE 10 - PUBLIC WAYS AND COMMON LAND
- WAIVER TO HAVE THE ZONING BOARD OF APPEALS BE THE PERMIT ISSUING AUTHORITY INSTEAD OF THE BOARD OF SELECTMEN.

ARTICLE 10-34A
- WAIVER ALLOWING SOIL, LOAM, SAND, OR GRAVEL FROM LAND IN TOWN NOT IN PUBLIC USE TO ANY LOCATIONS OUTSIDE OF THE TOWN.

ARTICLE 22-5
- WAIVER FROM THE CONSERVATION COMMISSION HAVING THE AUTHORIZATION TO DENY THE PROJECT

ARTICLE 22-8
- WAIVER REQUESTED AS A BOND IS ALREADY REQUIRED OF THE APPLICANT AS PART OF THE 40B PROCESS.

COMMONWEALTH OF MASSACHUSETTS
CARLTON M. QUINN
CIVIL
No. 49923
REGISTERED PROFESSIONAL ENGINEER

PROFESSIONAL ENGINEER FOR
ALLEN & MAJOR ASSOCIATES, INC.

REV	DATE	DESCRIPTION
3.	01/04/2017	ISSUED FOR ZBA RESUBMITTAL
2.	11/2/2016	ISSUED FOR ZBA RESUBMITTAL
1.	10/25/2016	ISSUED FOR ZBA RESUBMITTAL

APPLICANT\OWNER:
BROADSTONE BARE COVE ALLIANCE, LLC. C/O
ALLIANCE RESIDENTIAL COMPANY
184 HIGH STREET, SUITE 401
BOSTON, MA 02110

PROJECT:
BROADSTONE BARE COVE
230 BEAL STREET
HINGHAM, MA

PROJECT NO.	2118-02	DATE:	08-12-2016
SCALE:	1" = 40'	DWG. NAME:	C2118-02
DESIGNED BY:	SJL	CHECKED BY:	CMQ

PREPARED BY:

ALLEN & MAJOR ASSOCIATES, INC.
civil & structural engineering ◆ land surveying
environmental consulting ◆ landscape architecture
www.allenmajor.com
100 COMMERCE WAY
P.O. BOX 2118
WOBURN MA 01888-0118
TEL: (781) 935-6889
FAX: (781) 935-2896
WOBURN, MA ◆ LAKEVILLE, MA ◆ MANCHESTER, NH

THIS DRAWING HAS BEEN PREPARED IN ELECTRONIC FORMAT. CLIENT/CLIENT'S REPRESENTATIVE OR CONSULTANT MAY BE PROVIDED COPIES OF DRAWINGS AND SPECIFICATIONS ON MAGNETIC MEDIA FOR HIS/HER INFORMATION AND USE FOR SPECIFIC APPLICATION TO THIS PROJECT. DUE TO THE POTENTIAL THAT THE MAGNETIC INFORMATION MAY BE MODIFIED UNINTENTIONALLY OR OTHERWISE, ALLEN & MAJOR ASSOCIATES, INC. MAY REMOVE ALL INDICATION OF THE DOCUMENT'S AUTHORSHIP ON THE MAGNETIC MEDIA. PRINTED REPRESENTATIONS OF THE DRAWINGS AND SPECIFICATIONS ISSUED SHALL BE THE ONLY RECORD COPIES OF ALLEN & MAJOR ASSOCIATES, INC.'S WORK PRODUCT.

DRAWING TITLE:
UTILITY PLAN

SHEET No.
C-4A

Copyright©2017 Allen & Major Associates, Inc.
All Rights Reserved

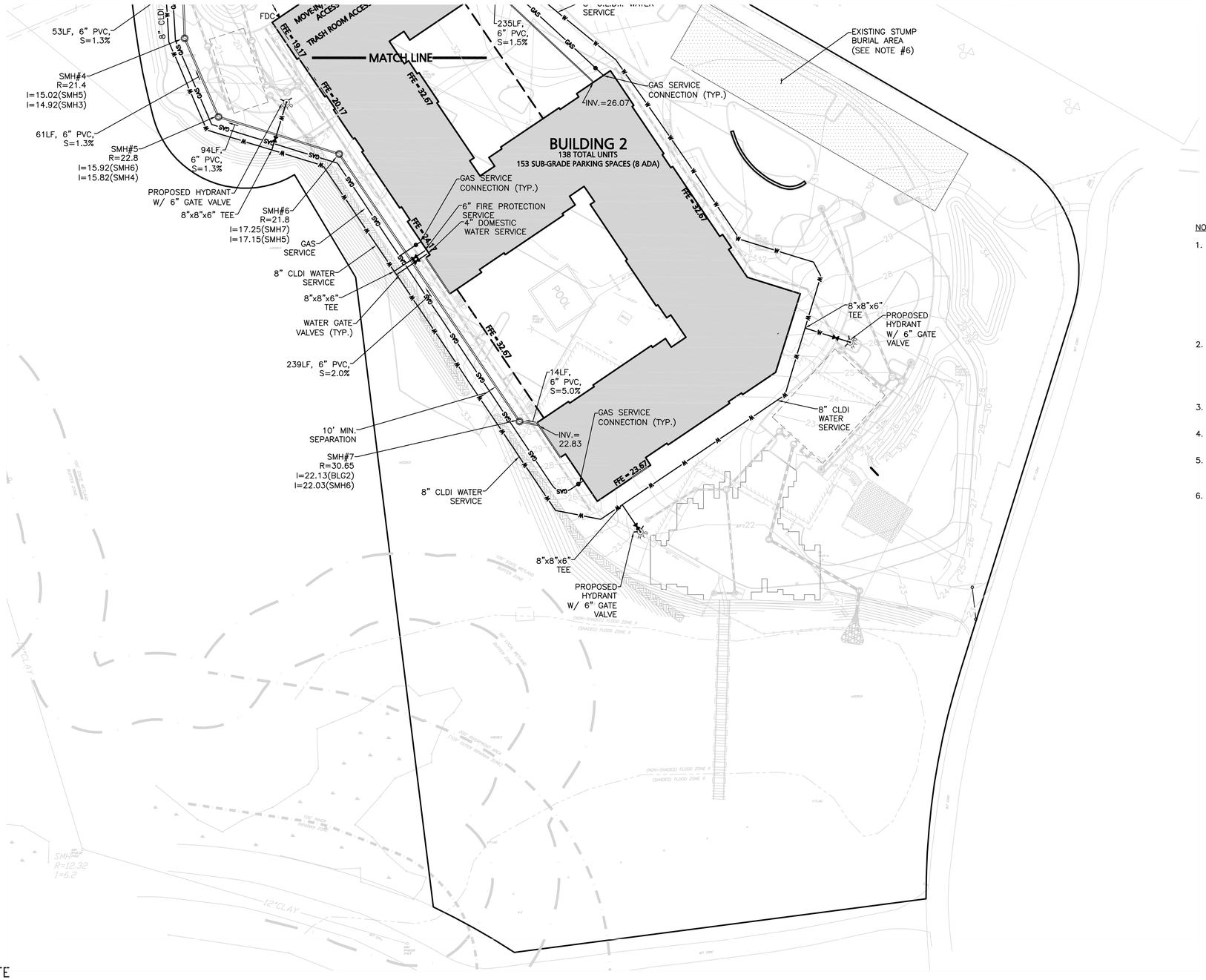

LEGEND:

SEWER MANHOLE (SMH)	S
SEWER CLEANOUT (CO)	●
OIL/WATER SEPARATOR (OWS)	OWS
SEWER VENT	V
SEWER LINE	
WATER SERVICE	W
POST INDICATOR VALVE (PIV)	●
FIRE DEPT. CONNECTION	▼ FDC
WATER VALVE (WV)	⋈
HYDRANT	
WATER LINE REDUCER	▶
GAS LINE	GAS
GAS VALVE	●

NOTES:

1. THE LOCATIONS OF EXISTING UNDERGROUND UTILITIES ARE SHOWN IN AN APPROXIMATE WAY ONLY AND HAVE NOT BEEN INDEPENDENTLY VERIFIED BY THE OWNER OR IT'S REPRESENTATIVE. THE CONTRACTOR SHALL DETERMINE THE EXACT LOCATION OF ALL EXISTING UTILITIES BEFORE COMMENCING WORK, AND AGREES TO BE FULLY RESPONSIBLE FOR ANY AND ALL DAMAGES WHICH MIGHT BE OCCASIONED BY THE CONTRACTOR'S FAILURE TO EXACTLY LOCATE AND PRESERVE ANY AND ALL UNDERGROUND UTILITIES.

2. THE INFORMATION SHOWN ON THIS PLAN IS THE SOLE PROPERTY OF ALLEN & MAJOR ASSOCIATES, INC. IT'S INTENDED USE IS TO PROVIDE INFORMATION. ANY ALTERATION, MISUSE, OR RECALCULATION OF INFORMATION OR DATA WITHOUT THE EXPRESSED, WRITTEN CONSENT OF ALLEN & MAJOR ASSOCIATES, INC. IS STRICTLY PROHIBITED.

3. GAS SERVICE SIZE AND LOCATION SHALL BE DETERMINED BY SERVICE PROVIDER.

4. FIRE & DOMESTIC WATER SERVICE SIZE TO BE CONFIRMED BY MEP ENGINEER.

5. CONTRACTOR TO VERIFY WITH ENGINEER, IN WRITING, THAT EXISTING MANHOLE CAN BE MODIFIED AS ILLUSTRATED PRIOR TO START OF CONSTRUCTION.

6. THE CONTRACTOR SHALL REVIEW THE RECORD PLAN ENTITLED "BUILDING DEMOLITION AND DEBRIS DISPOSAL AREA PLAN" OF 1988 AND VERIFY, IN THE FIELD, THE ELEVATION AND LOCATION OF THE DEBRIS AND STUMP BURIAL AREA. SPECIAL PRECAUTIONS SHALL BE TAKEN TO ENSURE THIS AREA IS NOT DISTURBED DURING CONSTRUCTION.

DIG SAFE

BEFORE YOU DIG
CALL 811 OR
1-888-DIG-SAFE
1-888-344-7233

GRAPHIC SCALE

40 0 20 40 80 160

(IN FEET)
1 inch = 40 ft.

N:\PROJECTS\2118-02\CIVIL\DRAWINGS\CURRENT\C-2118-02 - UTILITIES.DWG

TOWN OF HINGHAM LIST OF WAIVERS:

SECTION III-A-1.5 - SCHEDULE OF USES
- WAIVER OF THE PROHIBITION OF MULTI-FAMILY DWELLINGS IN THE OFFICE PARK DISTRICT.

SECTION IV-A - SCHEDULE OF DIMENSIONAL REQUIREMENTS
- WAIVER TO ALLOW FOR A MAXIMUM BUILDING HEIGHT OF 35 FEET (50.33'±).
- WAIVER TO ALLOW FOR A MAXIMUM FLOOR AREA RATIO OF 0.15 (0.60).
- WAIVER TO ALLOW FOR A MINIMUM FRONT YARD SETBACK OF 100 FEET (85.5 FEET).

SECTION IV-B-5 - SPECIAL REQUIREMENTS TO SCHEDULE OF DIMENSIONAL REQUIREMENTS
- WAIVER FOR A MINIMUM OF 20 FEET OF GREEN SPACE AROUND THE PERIMETER OF THE PROPERTY.

SECTION IV-B-6
- WAIVER TO ALLOW SITE PLAN REVIEW TO BE PERFORMED BY THE PLANNING BOARD.

SECTION IV-C-4 - GENERAL INTENSITY PROVISIONS
- WAIVER TO ALLOW MORE THAN ONE DWELLING UNIT PER ANY SINGLE LOT (200).

SECTION IV-E-1B - RESIDENTIAL MULTI-UNIT DEVELOPMENT
- WAIVER TO ALLOW THE NUMBER OF DWELLING UNITS PER ACRE TO BE MORE THAN 8 (18.2 UNITS/ACRE)

SECTION IV-E-1D
- WAIVER FROM PROVIDING 2000 S.F. OF LANDSCAPED SPACE PER DWELLING UNIT.

SECTION IV-E-1E
- WAIVER FROM PROVIDING 300 S.F. OF RECREATIONAL SPACE PER DWELLING UNIT.

SECTION IV-E-1F
- WAIVER FROM PROVIDING 50 FEET OF LANDSCAPED BUFFER ADJACENT TO EACH PROPERTY LINE.

SECTION IV-E-1G
- WAIVER FROM PROVIDING 300 S.F. OF RECREATIONAL SPACE PER DWELLING UNIT.

SECTION IV-E-1I
- WAIVER ALLOWING LESS THAN TWO PARKING SPACES PER DWELLING UNIT (1.55 STALLS/UNIT).

SECTION IV-E-5E
- WAIVER TO DEFER TO CURRENT DHCD LOCAL PREFERENCE CATEGORIES.

SECTION V-A-2 - OFF-STREET PARKING REQUIREMENTS
- WAIVER FROM A MINIMUM OF 2.0 PARKING STALLS PER UNIT (1.55 STALLS/UNIT).

SECTION V-A-3 - OFF-STREET PARKING REQUIREMENTS
- WAIVER FROM MINIMUM AISLE WIDTH FOR A PARKING STALL WITH NO OVERHANG

SECTION V-C-1A - EARTH REMOVAL REGULATIONS
- WAIVER ALLOWING THE REMOVAL OF SOIL, LOAM, SAND, GRAVEL, ETC. TO BE REMOVED FROM A LOT.

ARTICLE 10 - PUBLIC WAYS AND COMMON LAND
- WAIVER TO HAVE THE ZONING BOARD OF APPEALS BE THE PERMIT ISSUING AUTHORITY INSTEAD OF THE BOARD OF SELECTMEN.

ARTICLE 10-34A
- WAIVER ALLOWING SOIL, LOAM, SAND, OR GRAVEL FROM LAND IN TOWN NOT IN PUBLIC USE TO ANY LOCATIONS OUTSIDE OF THE TOWN.

ARTICLE 22-5
- WAIVER FROM THE CONSERVATION COMMISSION HAVING THE AUTHORIZATION TO DENY THE PROJECT

ARTICLE 22-8
- WAIVER REQUESTED AS A BOND IS ALREADY REQUIRED OF THE APPLICANT AS PART OF THE 40B PROCESS.

COMMONWEALTH OF MASSACHUSETTS
CARLTON M. QUINN
CIVIL
No.49923
REGISTERED PROFESSIONAL ENGINEER

PROFESSIONAL ENGINEER FOR
ALLEN & MAJOR ASSOCIATES, INC.

REV	DATE	DESCRIPTION
3.	01/04/2017	ISSUED FOR ZBA RESUBMITTAL
2.	11/2/2016	ISSUED FOR ZBA RESUBMITTAL
1.	10/25/2016	ISSUED FOR ZBA RESUBMITTAL

APPLICANT\OWNER:
BROADSTONE BARE COVE ALLIANCE, LLC. C/O
ALLIANCE RESIDENTIAL COMPANY
184 HIGH STREET, SUITE 401
BOSTON, MA 02110

PROJECT:
BROADSTONE BARE COVE
230 BEAL STREET
HINGHAM, MA

PROJECT NO.	2118-02	DATE:	08-12-2016
SCALE:	1" = 40'	DWG. NAME:	C2118-02
DESIGNED BY:	SJL	CHECKED BY:	CMQ

PREPARED BY:
ALLEN & MAJOR ASSOCIATES, INC.
civil & structural engineering ◆ land surveying
environmental consulting ◆ landscape architecture
www.allenmajor.com
100 COMMERCE WAY
P.O. BOX 2118
WOBURN MA 01888-0118
TEL: (781) 935-6889
FAX: (781) 935-2896
WOBURN, MA ◆ LAKEVILLE, MA ◆ MANCHESTER, NH

THIS DRAWING HAS BEEN PREPARED IN ELECTRONIC FORMAT. CLIENT/CLIENT'S REPRESENTATIVE OR CONSULTANT MAY BE PROVIDED COPIES OF DRAWINGS AND SPECIFICATIONS ON MAGNETIC MEDIA FOR HIS/HER INFORMATION AND USE FOR SPECIFIC APPLICATION TO THIS PROJECT. DUE TO THE POTENTIAL THAT THE MAGNETIC INFORMATION MAY BE MODIFIED UNINTENTIONALLY OR OTHERWISE, ALLEN & MAJOR ASSOCIATES, INC. MAY REMOVE ALL INDICATION OF THE DOCUMENT'S AUTHORSHIP ON THE MAGNETIC MEDIA. PRINTED REPRESENTATIONS OF THE DRAWINGS AND SPECIFICATIONS ISSUED SHALL BE THE ONLY RECORD COPIES OF ALLEN & MAJOR ASSOCIATES, INC.'S WORK PRODUCT.

DRAWING TITLE:
UTILITY PLAN

SHEET No.
C-4B

Copyright©2017 Allen & Major Associates, Inc.
All Rights Reserved

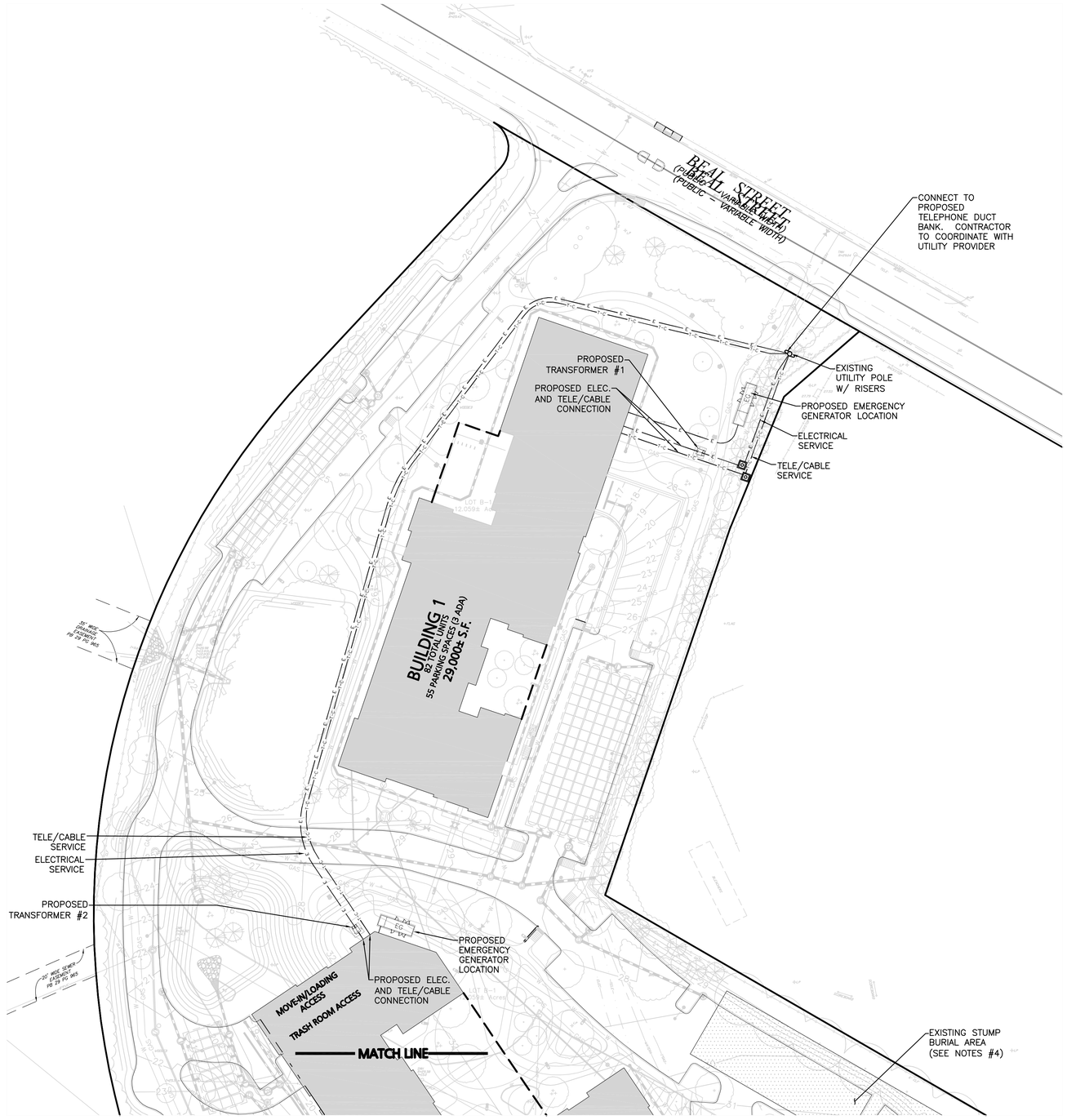

LEGEND:

UTILITY POLE	
HAND HOLE	
ELECTRICAL CONDUIT	— E — E —
TELE/CABLE CONDUIT	— T-C — T-C —
OVER HEAD WIRE	— OHW —

NOTES:

1. THE CONTRACTOR IS SPECIFICALLY CAUTIONED THAT THE LOCATION AND/OR ELEVATION OF EXISTING UTILITIES AND STRUCTURES AS SHOWN ON THESE PLANS IS BASED ON RECORDS OF VARIOUS UTILITY COMPANIES AND WHERE POSSIBLE, MEASUREMENTS TAKEN IN THE FIELD. THIS INFORMATION IS NOT TO BE RELIED ON AS BEING EXACT OR COMPLETE. THE LOCATION OF ALL UNDERGROUND UTILITIES AND STRUCTURES SHALL BE VERIFIED IN THE FIELD BY THE CONTRACTOR PRIOR TO THE START OF CONSTRUCTION. THE CONTRACTOR MUST CONTACT THE APPROPRIATE UTILITY COMPANY, AND GOVERNING PERMITTING AUTHORITY, AND "DIGSAFE" AT LEAST 72 HOURS PRIOR TO ANY EXCAVATION WORK TO REQUEST EXACT FIELD LOCATION OF UTILITIES AND THE ENGINEER SHALL BE NOTIFIED IN WRITING OF ANY UTILITIES INTERFERING WITH THE PROPOSED CONSTRUCTION AND APPROPRIATE REMEDIAL ACTION TAKEN BEFORE PROCEEDING WITH THE WORK. IT SHALL BE THE RESPONSIBILITY OF THE CONTRACTOR TO RELOCATE ALL EXISTING UTILITIES WHICH CONFLICT WITH THE PROPOSED IMPROVEMENTS SHOWN ON THE PLANS.

2. THE INFORMATION SHOWN ON THIS PLAN IS THE SOLE PROPERTY OF ALLEN & MAJOR ASSOCIATES, INC. IT'S INTENDED USE IS TO PROVIDE INFORMATION. ANY ALTERATION, MISUSE, OR RECALCULATION OF INFORMATION OR DATA WITHOUT THE EXPRESSED, WRITTEN CONSENT OF ALLEN & MAJOR ASSOCIATES, INC. IS STRICTLY PROHIBITED.

3. ELECTRIC AND TELECOMMUNICATIONS LINES ARE SHOWN FOR COORDINATION PURPOSES ONLY. FINAL LOCATION OF TRANSFORMERS OR UNDERGROUND ELECTRIC AND TELE/DATA LINES SHALL BE DETERMINED BY THE UTILITY PROVIDER.

4. THE CONTRACTOR SHALL REVIEW THE RECORD PLAN ENTITLED "BUILDING DEMOLITION AND DEBRIS DISPOSAL AREA PLAN" OF 1988 AND VERIFY, IN THE FIELD, THE ELEVATION AND LOCATION OF THE DEBRIS AND STUMP BURIAL AREA. SPECIAL PRECAUTIONS SHALL BE TAKEN TO ENSURE THIS AREA IS NOT DISTURBED DURING CONSTRUCTION.

DIG SAFE

BEFORE YOU DIG
CALL 811 OR
1-888-DIG-SAFE
1-888-344-7233

GRAPHIC SCALE

40 0 20 40 80 160

(IN FEET)
1 inch = 40 ft.

N:\PROJECTS\2118-02\CIVIL\DRAWINGS\CURRENT\C-2118-02 - ELECTRICAL.DWG

TOWN OF HINGHAM LIST OF WAIVERS:

SECTION III-A-1.5 - SCHEDULE OF USES
- WAIVER OF THE PROHIBITION OF MULTI-FAMILY DWELLINGS IN THE OFFICE PARK DISTRICT.

SECTION IV-A - SCHEDULE OF DIMENSIONAL REQUIREMENTS
- WAIVER TO ALLOW FOR A MAXIMUM BUILDING HEIGHT OF 35 FEET (50.33'±).
- WAIVER TO ALLOW FOR A MAXIMUM FLOOR AREA RATIO OF 0.15 (0.60).
- WAIVER TO ALLOW FOR A MINIMUM FRONT YARD SETBACK OF 100 FEET (85.5 FEET).

SECTION IV-B-5 - SPECIAL REQUIREMENTS TO SCHEDULE OF DIMENSIONAL REQUIREMENTS
- WAIVER FOR A MINIMUM OF 20 FEET OF GREEN SPACE AROUND THE PERIMETER OF THE PROPERTY.

SECTION IV-B-6
- WAIVER TO ALLOW SITE PLAN REVIEW TO BE PERFORMED BY THE PLANNING BOARD.

SECTION IV-C-4 - GENERAL INTENSITY PROVISIONS
- WAIVER TO ALLOW MORE THAN ONE DWELLING UNIT PER ANY SINGLE LOT (200).

SECTION IV-E-1B - RESIDENTIAL MULTI-UNIT DEVELOPMENT
- WAIVER TO ALLOW THE NUMBER OF DWELLING UNITS PER ACRE TO BE MORE THAN 8 (18.2 UNITS/ACRE)

SECTION IV-E-1D
- WAIVER FROM PROVIDING 2000 S.F. OF LANDSCAPED SPACE PER DWELLING UNIT.

SECTION IV-E-1E
- WAIVER FROM PROVIDING 300 S.F. OF RECREATIONAL SPACE PER DWELLING UNIT.

SECTION IV-E-1F
- WAIVER FROM PROVIDING 50 FEET OF LANDSCAPED BUFFER ADJACENT TO EACH PROPERTY LINE.

SECTION IV-E-1G
- WAIVER FROM PROVIDING 300 S.F. OF RECREATIONAL SPACE PER DWELLING UNIT.

SECTION IV-E-1I
- WAIVER ALLOWING LESS THAN TWO PARKING SPACES PER DWELLING UNIT (1.55 STALLS/UNIT).

SECTION IV-E-5E
- WAIVER TO DEFER TO CURRENT DHCD LOCAL PREFERENCE CATEGORIES.

SECTION V-A-2 - OFF-STREET PARKING REQUIREMENTS
- WAIVER FROM A MINIMUM OF 2.0 PARKING STALLS PER UNIT (1.55 STALLS/UNIT).

SECTION V-A-3 - OFF-STREET PARKING REQUIREMENTS
- WAIVER FROM MINIMUM AISLE WIDTH FOR A PARKING STALL WITH NO OVERHANG

SECTION V-C-1A - EARTH REMOVAL REGULATIONS
- WAIVER ALLOWING THE REMOVAL OF SOIL, LOAM, SAND, GRAVEL, ETC. TO BE REMOVED FROM A LOT.

ARTICLE 10 - PUBLIC WAYS AND COMMON LAND
- WAIVER TO HAVE THE ZONING BOARD OF APPEALS BE THE PERMIT ISSUING AUTHORITY INSTEAD OF THE BOARD OF SELECTMEN.

ARTICLE 10-34A
- WAIVER ALLOWING SOIL, LOAM, SAND, OR GRAVEL FROM LAND IN TOWN NOT IN PUBLIC USE TO ANY LOCATIONS OUTSIDE OF THE TOWN.

ARTICLE 22-5
- WAIVER FROM THE CONSERVATION COMMISSION HAVING THE AUTHORIZATION TO DENY THE PROJECT

ARTICLE 22-8
- WAIVER REQUESTED AS A BOND IS ALREADY REQUIRED OF THE APPLICANT AS PART OF THE 40B PROCESS.

COMMONWEALTH OF MASSACHUSETTS
CARLTON M. QUINN
CIVIL
No. 49923
REGISTERED PROFESSIONAL ENGINEER

PROFESSIONAL ENGINEER FOR
ALLEN & MAJOR ASSOCIATES, INC.

REV	DATE	DESCRIPTION
3.	01/04/2017	ISSUED FOR ZBA RESUBMITTAL
2.	11/2/2016	ISSUED FOR ZBA RESUBMITTAL
1.	10/25/2016	ISSUED FOR ZBA RESUBMITTAL

APPLICANT\OWNER:
BROADSTONE BARE COVE ALLIANCE, LLC. C/O
ALLIANCE RESIDENTIAL COMPANY
184 HIGH STREET, SUITE 401
BOSTON, MA 02110

PROJECT:
BROADSTONE BARE COVE
230 BEAL STREET
HINGHAM, MA

PROJECT NO.	2118-02	DATE:	08-12-2016
SCALE:	1" = 40'	DWG. NAME:	C2118-02
DESIGNED BY:	SJL	CHECKED BY:	CMQ

PREPARED BY:

ALLEN & MAJOR ASSOCIATES, INC.
civil & structural engineering ◆ land surveying
environmental consulting ◆ landscape architecture
www.allenmajor.com
100 COMMERCE WAY
P.O. BOX 2118
WOBURN MA 01888-0118
TEL: (781) 935-6889
FAX: (781) 935-2896
WOBURN, MA ◆ LAKEVILLE, MA ◆ MANCHESTER, NH

THIS DRAWING HAS BEEN PREPARED IN ELECTRONIC FORMAT. CLIENT/CLIENT'S REPRESENTATIVE OR CONSULTANT MAY BE PROVIDED COPIES OF DRAWINGS AND SPECIFICATIONS ON MAGNETIC MEDIA FOR HIS/HER INFORMATION AND USE FOR SPECIFIC APPLICATION TO THIS PROJECT. DUE TO THE POTENTIAL THAT THE MAGNETIC INFORMATION MAY BE MODIFIED UNINTENTIONALLY OR OTHERWISE, ALLEN & MAJOR ASSOCIATES, INC. MAY REMOVE ALL INDICATION OF THE DOCUMENT'S AUTHORSHIP ON THE MAGNETIC MEDIA. PRINTED REPRESENTATIONS OF THE DRAWINGS AND SPECIFICATIONS ISSUED SHALL BE THE ONLY RECORD COPIES OF ALLEN & MAJOR ASSOCIATES, INC.'S WORK PRODUCT.

DRAWING TITLE:
ELECTRICAL PLAN

SHEET No.
C-5A

Copyright©2017 Allen & Major Associates, Inc.
All Rights Reserved

LEGEND:

UTILITY POLE	
HAND HOLE	
ELECTRICAL CONDUIT	— E — E —
TELE/CABLE CONDUIT	— T-C — T-C —
OVER HEAD WIRE	— OHW —

NOTES:

1. THE CONTRACTOR IS SPECIFICALLY CAUTIONED THAT THE LOCATION AND/OR ELEVATION OF EXISTING UTILITIES AND STRUCTURES AS SHOWN ON THESE PLANS IS BASED ON RECORDS OF VARIOUS UTILITY COMPANIES AND WHERE POSSIBLE, MEASUREMENTS TAKEN IN THE FIELD. THIS INFORMATION IS NOT TO BE RELIED ON AS BEING EXACT OR COMPLETE. THE LOCATION OF ALL UNDERGROUND UTILITIES AND STRUCTURES SHALL BE VERIFIED IN THE FIELD BY THE CONTRACTOR PRIOR TO THE START OF CONSTRUCTION. THE CONTRACTOR MUST CONTACT THE APPROPRIATE UTILITY COMPANY, AND GOVERNING PERMITTING AUTHORITY, AND "DIGSAFE" AT LEAST 72 HOURS PRIOR TO ANY EXCAVATION WORK TO REQUEST EXACT FIELD LOCATION OF UTILITIES AND THE ENGINEER SHALL BE NOTIFIED IN WRITING OF ANY UTILITIES INTERFERING WITH THE PROPOSED CONSTRUCTION AND APPROPRIATE REMEDIAL ACTION TAKEN BEFORE PROCEEDING WITH THE WORK. IT SHALL BE THE RESPONSIBILITY OF THE CONTRACTOR TO RELOCATE ALL EXISTING UTILITIES WHICH CONFLICT WITH THE PROPOSED IMPROVEMENTS SHOWN ON THE PLANS.

2. THE INFORMATION SHOWN ON THIS PLAN IS THE SOLE PROPERTY OF ALLEN & MAJOR ASSOCIATES, INC. IT'S INTENDED USE IS TO PROVIDE INFORMATION. ANY ALTERATION, MISUSE, OR RECALCULATION OF INFORMATION OR DATA WITHOUT THE EXPRESSED, WRITTEN CONSENT OF ALLEN & MAJOR ASSOCIATES, INC. IS STRICTLY PROHIBITED.

3. ELECTRIC AND TELECOMMUNICATIONS LINES ARE SHOWN FOR COORDINATION PURPOSES ONLY. FINAL LOCATION OF TRANSFORMERS OR UNDERGROUND ELECTRIC AND TELE/DATA LINES SHALL BE DETERMINED BY THE UTILITY PROVIDER.

4. THE CONTRACTOR SHALL REVIEW THE RECORD PLAN ENTITLED "BUILDING DEMOLITION AND DEBRIS DISPOSAL AREA PLAN" OF 1988 AND VERIFY, IN THE FIELD, THE ELEVATION AND LOCATION OF THE DEBRIS AND STUMP BURIAL AREA. SPECIAL PRECAUTIONS SHALL BE TAKEN TO ENSURE THIS AREA IS NOT DISTURBED DURING CONSTRUCTION.

DIG SAFE

BEFORE YOU DIG
CALL 811 OR
1-888-DIG-SAFE
1-888-344-7233

GRAPHIC SCALE

40 0 20 40 80 160

(IN FEET)
1 inch = 40 ft.

N:\PROJECTS\2118-02\CIVIL\DRAWINGS\CURRENT\C-2118-02 - ELECTRICAL.DWG

TOWN OF HINGHAM LIST OF WAIVERS:

SECTION III-A-1.5 - SCHEDULE OF USES
- WAIVER OF THE PROHIBITION OF MULTI-FAMILY DWELLINGS IN THE OFFICE PARK DISTRICT.

SECTION IV-A - SCHEDULE OF DIMENSIONAL REQUIREMENTS
- WAIVER TO ALLOW FOR A MAXIMUM BUILDING HEIGHT OF 35 FEET (50.33'±).
- WAIVER TO ALLOW FOR A MAXIMUM FLOOR AREA RATIO OF 0.15 (0.60).
- WAIVER TO ALLOW FOR A MINIMUM FRONT YARD SETBACK OF 100 FEET (85.5 FEET).

SECTION IV-B-5 - SPECIAL REQUIREMENTS TO SCHEDULE OF DIMENSIONAL REQUIREMENTS
- WAIVER FOR A MINIMUM OF 20 FEET OF GREEN SPACE AROUND THE PERIMETER OF THE PROPERTY.

SECTION IV-B-6
- WAIVER TO ALLOW SITE PLAN REVIEW TO BE PERFORMED BY THE PLANNING BOARD.

SECTION IV-C-4 - GENERAL INTENSITY PROVISIONS
- WAIVER TO ALLOW MORE THAN ONE DWELLING UNIT PER ANY SINGLE LOT (200).

SECTION IV-E-1B - RESIDENTIAL MULTI-UNIT DEVELOPMENT
- WAIVER TO ALLOW THE NUMBER OF DWELLING UNITS PER ACRE TO BE MORE THAN 8 (18.2 UNITS/ACRE)

SECTION IV-E-1D
- WAIVER FROM PROVIDING 2000 S.F. OF LANDSCAPED SPACE PER DWELLING UNIT.

SECTION IV-E-1E
- WAIVER FROM PROVIDING 300 S.F. OF RECREATIONAL SPACE PER DWELLING UNIT.

SECTION IV-E-1F
- WAIVER FROM PROVIDING 50 FEET OF LANDSCAPED BUFFER ADJACENT TO EACH PROPERTY LINE.

SECTION IV-E-1G
- WAIVER FROM PROVIDING 300 S.F. OF RECREATIONAL SPACE PER DWELLING UNIT.

SECTION IV-E-1I
- WAIVER ALLOWING LESS THAN TWO PARKING SPACES PER DWELLING UNIT (1.55 STALLS/UNIT).

SECTION IV-E-5E
- WAIVER TO DEFER TO CURRENT DHCD LOCAL PREFERENCE CATEGORIES.

SECTION V-A-2 - OFF-STREET PARKING REQUIREMENTS
- WAIVER FROM A MINIMUM OF 2.0 PARKING STALLS PER UNIT (1.55 STALLS/UNIT).

SECTION V-A-3 - OFF-STREET PARKING REQUIREMENTS
- WAIVER FROM MINIMUM AISLE WIDTH FOR A PARKING STALL WITH NO OVERHANG

SECTION V-C-1A - EARTH REMOVAL REGULATIONS
- WAIVER ALLOWING THE REMOVAL OF SOIL, LOAM, SAND, GRAVEL, ETC. TO BE REMOVED FROM A LOT.

ARTICLE 10 - PUBLIC WAYS AND COMMON LAND
- WAIVER TO HAVE THE ZONING BOARD OF APPEALS BE THE PERMIT ISSUING AUTHORITY INSTEAD OF THE BOARD OF SELECTMEN.

ARTICLE 10-34A
- WAIVER ALLOWING SOIL, LOAM, SAND, OR GRAVEL FROM LAND IN TOWN NOT IN PUBLIC USE TO ANY LOCATIONS OUTSIDE OF THE TOWN.

ARTICLE 22-5
- WAIVER FROM THE CONSERVATION COMMISSION HAVING THE AUTHORIZATION TO DENY THE PROJECT

ARTICLE 22-8
- WAIVER REQUESTED AS A BOND IS ALREADY REQUIRED OF THE APPLICANT AS PART OF THE 40B PROCESS.

COMMONWEALTH OF MASSACHUSETTS
CARLTON M. QUINN
CIVIL
No.49923
REGISTERED PROFESSIONAL ENGINEER

PROFESSIONAL ENGINEER FOR
ALLEN & MAJOR ASSOCIATES, INC.

REV	DATE	DESCRIPTION
3.	01/04/2017	ISSUED FOR ZBA RESUBMITTAL
2.	11/2/2016	ISSUED FOR ZBA RESUBMITTAL
1.	10/25/2016	ISSUED FOR ZBA RESUBMITTAL

APPLICANT\OWNER:
BROADSTONE BARE COVE ALLIANCE, LLC. C/O
ALLIANCE RESIDENTIAL COMPANY
184 HIGH STREET, SUITE 401
BOSTON, MA 02110

PROJECT:
BROADSTONE BARE COVE
230 BEAL STREET
HINGHAM, MA

PROJECT NO.	2118-02	DATE:	08-12-2016
SCALE:	1" = 40'	DWG. NAME:	C2118-02
DESIGNED BY:	SJL	CHECKED BY:	CMQ

PREPARED BY:
ALLEN & MAJOR ASSOCIATES, INC.
civil & structural engineering ◆ land surveying
environmental consulting ◆ landscape architecture
www.allenmajor.com
100 COMMERCE WAY
P.O. BOX 2118
WOBURN MA 01888-0118
TEL: (781) 935-6889
FAX: (781) 935-2896
WOBURN, MA ◆ LAKEVILLE, MA ◆ MANCHESTER, NH

THIS DRAWING HAS BEEN PREPARED IN ELECTRONIC FORMAT. CLIENT/CLIENT'S REPRESENTATIVE OR CONSULTANT MAY BE PROVIDED COPIES OF DRAWINGS AND SPECIFICATIONS ON MAGNETIC MEDIA FOR HIS/HER INFORMATION AND USE FOR SPECIFIC APPLICATION TO THIS PROJECT. DUE TO THE POTENTIAL THAT THE MAGNETIC INFORMATION MAY BE MODIFIED UNINTENTIONALLY OR OTHERWISE, ALLEN & MAJOR ASSOCIATES, INC. MAY REMOVE ALL INDICATION OF THE DOCUMENT'S AUTHORSHIP ON THE MAGNETIC MEDIA. PRINTED REPRESENTATIONS OF THE DRAWINGS AND SPECIFICATIONS ISSUED SHALL BE THE ONLY RECORD COPIES OF ALLEN & MAJOR ASSOCIATES, INC.'S WORK PRODUCT.

DRAWING TITLE: ELECTRICAL PLAN

SHEET No. C-5B

Copyright©2017 Allen & Major Associates, Inc.
All Rights Reserved

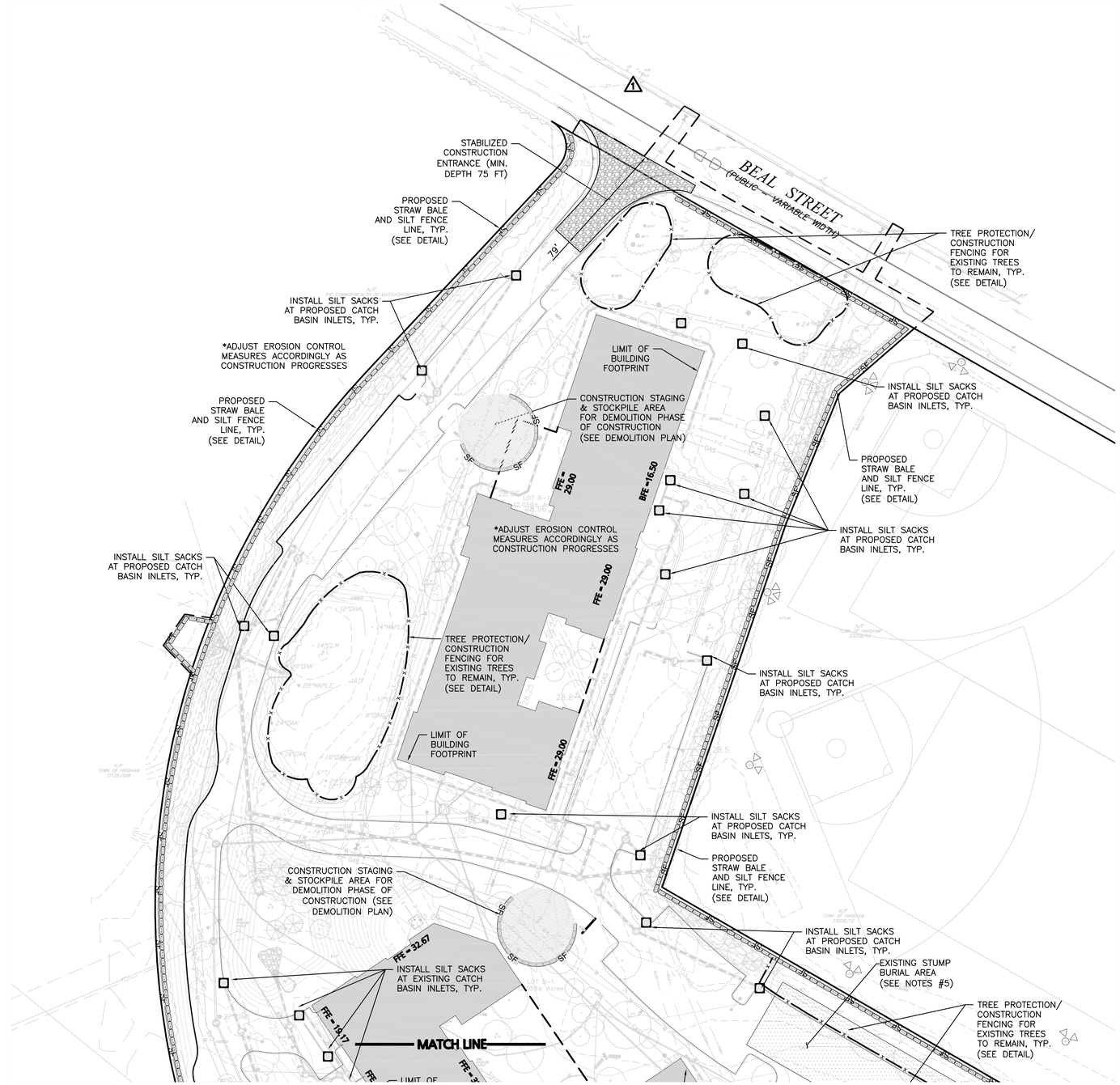

LEGEND:

- SILT FENCE — SF
- STRAWBALE & SILT FENCE LINE
- TREE PROTECTION/FENCING — X — X
- EROSION CONTROL FABRIC
- SILT SACK
- STABILIZED CONST. ENTRANCE
- STOCKPILE/CONSTRUCTION STAGING AREA
- LIMIT OF WORK LINE
- EXISTING TREES TO REMAIN
- EDGE OF EXISTING TREES TO REMAIN

NOTES:

1. THE LOCATIONS OF EXISTING UNDERGROUND UTILITIES ARE SHOWN IN AN APPROXIMATE WAY ONLY AND HAVE NOT BEEN INDEPENDENTLY VERIFIED BY THE OWNER OR IT'S REPRESENTATIVE. THE CONTRACTOR SHALL DETERMINE THE EXACT LOCATION OF ALL EXISTING UTILITIES BEFORE COMMENCING WORK, AND AGREES TO BE FULLY RESPONSIBLE FOR ANY AND ALL DAMAGES WHICH MIGHT BE OCCASIONED BY THE CONTRACTOR'S FAILURE TO EXACTLY LOCATE AND PRESERVE ANY AND ALL UNDERGROUND UTILITIES.
2. THE INFORMATION SHOWN ON THIS PLAN IS THE SOLE PROPERTY OF ALLEN & MAJOR ASSOCIATES, INC. IT'S INTENDED USE IS TO PROVIDE INFORMATION. ANY ALTERATION, MISUSE, OR RECALCULATION OF INFORMATION OR DATA WITHOUT THE EXPRESSED, WRITTEN CONSENT OF ALLEN & MAJOR ASSOCIATES, INC. IS STRICTLY PROHIBITED.
3. PIPE DIMENSIONS ARE MEASURED FROM THE INSIDE FACE OF THE STRUCTURE.
4. THE CONTRACTOR SHALL CONTACT "DIGSAFE" AND THE AT LEAST 72 HOURS PRIOR TO ANY EXCAVATION WORK TO REQUEST THE LOCATION OF THE EXISTING UTILITIES. DIGSAFE: 1-888-344-7233.
5. THE CONTRACTOR SHALL REVIEW THE RECORD PLAN ENTITLED "BUILDING DEMOLITION AND DEBRIS DISPOSAL AREA PLAN" OF 1988 AND VERIFY, IN THE FIELD, THE ELEVATION AND LOCATION OF THE DEBRIS AND STUMP BURIAL AREA. SPECIAL PRECAUTIONS SHALL BE TAKEN TO ENSURE THIS AREA IS NOT DISTURBED DURING CONSTRUCTION.
6. A LIMIT OF CLEARING MUST BE MARKED BY A MULCH LOG OR CONSTRUCTION FENCE.

DIG SAFE

BEFORE YOU DIG
CALL 811 OR
1-888-DIG-SAFE
1-888-344-7233

GRAPHIC SCALE

40 0 20 40 80 160

(IN FEET)
1 inch = 40 ft.

N:\PROJECTS\2118-02\CIVIL\DRAWINGS\CURRENT\C-2118-02 - EROSION CONTROL.DWG

TOWN OF HINGHAM LIST OF WAIVERS:

SECTION III-A-1.5 - SCHEDULE OF USES
- WAIVER OF THE PROHIBITION OF MULTI-FAMILY DWELLINGS IN THE OFFICE PARK DISTRICT.

SECTION IV-A - SCHEDULE OF DIMENSIONAL REQUIREMENTS
- WAIVER TO ALLOW FOR A MAXIMUM BUILDING HEIGHT OF 35 FEET (50.33'±).
- WAIVER TO ALLOW FOR A MAXIMUM FLOOR AREA RATIO OF 0.15 (0.60).
- WAIVER TO ALLOW FOR A MINIMUM FRONT YARD SETBACK OF 100 FEET (85.5 FEET).

SECTION IV-B-5 - SPECIAL REQUIREMENTS TO SCHEDULE OF DIMENSIONAL REQUIREMENTS
- WAIVER FOR A MINIMUM OF 20 FEET OF GREEN SPACE AROUND THE PERIMETER OF THE PROPERTY.

SECTION IV-B-6
- WAIVER TO ALLOW SITE PLAN REVIEW TO BE PERFORMED BY THE PLANNING BOARD.

SECTION IV-C-4 - GENERAL INTENSITY PROVISIONS
- WAIVER TO ALLOW MORE THAN ONE DWELLING UNIT PER ANY SINGLE LOT (200).

SECTION IV-F-1B - RESIDENTIAL MULTI-UNIT DEVELOPMENT
- WAIVER TO ALLOW THE NUMBER OF DWELLING UNITS PER ACRE TO BE MORE THAN 8 (18.2 UNITS/ACRE)

SECTION IV-F-1D
- WAIVER FROM PROVIDING 2000 S.F. OF LANDSCAPED SPACE PER DWELLING UNIT.

SECTION IV-F-1E
- WAIVER FROM PROVIDING 300 S.F. OF RECREATIONAL SPACE PER DWELLING UNIT.

SECTION IV-F-1F
- WAIVER FROM PROVIDING 50 FEET OF LANDSCAPED BUFFER ADJACENT TO EACH PROPERTY LINE.

SECTION IV-F-1G
- WAIVER FROM PROVIDING 300 S.F. OF RECREATIONAL SPACE PER DWELLING UNIT.

SECTION IV-F-1I
- WAIVER ALLOWING LESS THAN TWO PARKING SPACES PER DWELLING UNIT (1.55 STALLS/UNIT).

SECTION IV-F-5E
- WAIVER TO DEFER TO CURRENT DHCD LOCAL PREFERENCE CATEGORIES.

SECTION V-A-2 - OFF-STREET PARKING REQUIREMENTS
- WAIVER FROM A MINIMUM OF 2.0 PARKING STALLS PER UNIT (1.55 STALLS/UNIT).

SECTION V-A-3 - OFF-STREET PARKING REQUIREMENTS
- WAIVER FROM MINIMUM AISLE WIDTH FOR A PARKING STALL WITH NO OVERHANG

SECTION V-C-1A - EARTH REMOVAL REGULATIONS
- WAIVER ALLOWING THE REMOVAL OF SOIL, LOAM, SAND, GRAVEL, ETC. TO BE REMOVED FROM A LOT.

ARTICLE 10 - PUBLIC WAYS AND COMMON LAND
- WAIVER TO HAVE THE ZONING BOARD OF APPEALS BE THE PERMIT ISSUING AUTHORITY INSTEAD OF THE BOARD OF SELECTMEN.

ARTICLE 10-34A
- WAIVER ALLOWING SOIL, LOAM, SAND, OR GRAVEL FROM LAND IN TOWN NOT IN PUBLIC USE TO ANY LOCATIONS OUTSIDE OF THE TOWN.

ARTICLE 22-5
- WAIVER FROM THE CONSERVATION COMMISSION HAVING THE AUTHORIZATION TO DENY THE PROJECT

ARTICLE 22-8
- WAIVER REQUESTED AS A BOND IS ALREADY REQUIRED OF THE APPLICANT AS PART OF THE 40B PROCESS.

COMMONWEALTH OF MASSACHUSETTS
CARLTON M. QUINN
CIVIL
No.49923
REGISTERED PROFESSIONAL ENGINEER

PROFESSIONAL ENGINEER FOR
ALLEN & MAJOR ASSOCIATES, INC.

REV	DATE	DESCRIPTION
3.	01/04/2017	ISSUED FOR ZBA RESUBMITTAL
2.	11/2/2016	ISSUED FOR ZBA RESUBMITTAL
1.	10/25/2016	ISSUED FOR ZBA RESUBMITTAL

APPLICANT\OWNER:
BROADSTONE BARE COVE ALLIANCE, LLC. C/O
ALLIANCE RESIDENTIAL COMPANY
184 HIGH STREET, SUITE 401
BOSTON, MA 02110

PROJECT:
BROADSTONE BARE COVE
230 BEAL STREET
HINGHAM, MA

PROJECT NO.	2118-02	DATE:	08-12-2016
SCALE:	1" = 40'	DWG. NAME:	C2118-02
DESIGNED BY:	SJL	CHECKED BY:	CMQ

PREPARED BY:

ALLEN & MAJOR ASSOCIATES, INC.
civil & structural engineering ◆ land surveying
environmental consulting ◆ landscape architecture
www.allenmajor.com
100 COMMERCE WAY
P.O. BOX 2118
WOBURN MA 01888-0118
TEL: (781) 935-6889
FAX: (781) 935-2896
WOBURN, MA ◆ LAKEVILLE, MA ◆ MANCHESTER, NH

THIS DRAWING HAS BEEN PREPARED IN ELECTRONIC FORMAT. CLIENT/CLIENT'S REPRESENTATIVE OR CONSULTANT MAY BE PROVIDED COPIES OF DRAWINGS AND SPECIFICATIONS ON MAGNETIC MEDIA FOR HIS/HER INFORMATION AND USE FOR SPECIFIC APPLICATION TO THIS PROJECT. DUE TO THE POTENTIAL THAT THE MAGNETIC INFORMATION MAY BE MODIFIED UNINTENTIONALLY OR OTHERWISE, ALLEN & MAJOR ASSOCIATES, INC. MAY REMOVE ALL INDICATION OF THE DOCUMENT'S AUTHORSHIP ON THE MAGNETIC MEDIA. PRINTED REPRESENTATIONS OF THE DRAWINGS AND SPECIFICATIONS ISSUED SHALL BE THE ONLY RECORD COPIES OF ALLEN & MAJOR ASSOCIATES, INC.'S WORK PRODUCT.

DRAWING TITLE:
EROSION CONTROL PLAN

Copyright©2017 Allen & Major Associates, Inc.
All Rights Reserved

SHEET No.
C-6A

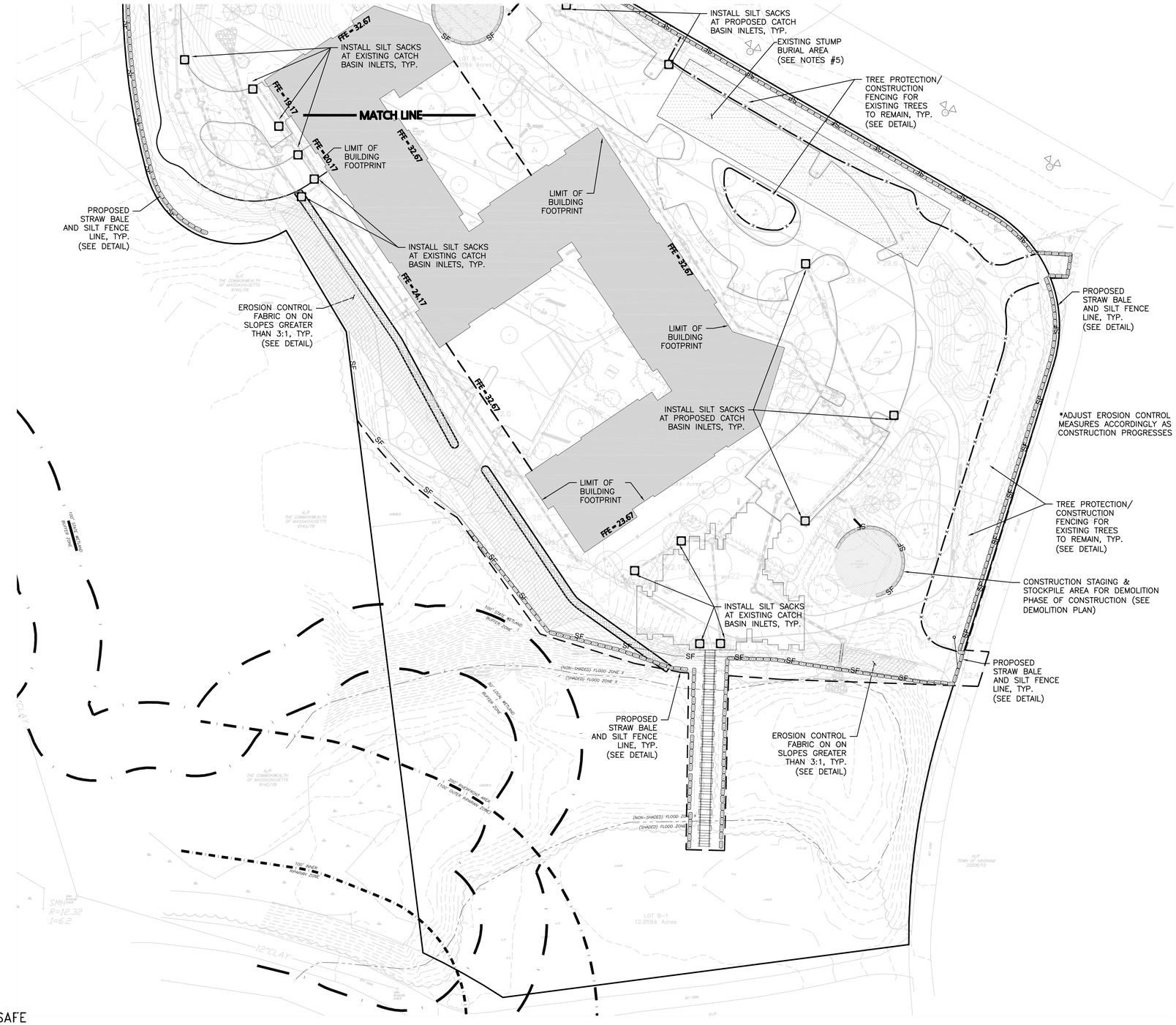

LEGEND:

SILT FENCE	SF
STRAWBALE & SILT FENCE LINE	
TREE PROTECTION/FENCING	x x
EROSION CONTROL FABRIC	
SILT SACK	
STABILIZED CONST. ENTRANCE	
STOCKPILE/CONSTRUCTION STAGING AREA	
LIMIT OF WORK LINE	
EXISTING TREES TO REMAIN	
EDGE OF EXISTING TREES TO REMAIN	

NOTES:

1. THE LOCATIONS OF EXISTING UNDERGROUND UTILITIES ARE SHOWN IN AN APPROXIMATE WAY ONLY AND HAVE NOT BEEN INDEPENDENTLY VERIFIED BY THE OWNER OR IT'S REPRESENTATIVE. THE CONTRACTOR SHALL DETERMINE THE EXACT LOCATION OF ALL EXISTING UTILITIES BEFORE COMMENCING WORK, AND AGREES TO BE FULLY RESPONSIBLE FOR ANY AND ALL DAMAGES WHICH MIGHT BE OCCASIONED BY THE CONTRACTOR'S FAILURE TO EXACTLY LOCATE AND PRESERVE ANY AND ALL UNDERGROUND UTILITIES.
2. THE INFORMATION SHOWN ON THIS PLAN IS THE SOLE PROPERTY OF ALLEN & MAJOR ASSOCIATES, INC. IT'S INTENDED USE IS TO PROVIDE INFORMATION. ANY ALTERATION, MISUSE, OR RECALCULATION OF INFORMATION OR DATA WITHOUT THE EXPRESSED, WRITTEN CONSENT OF ALLEN & MAJOR ASSOCIATES, INC. IS STRICTLY PROHIBITED.
3. PIPE DIMENSIONS ARE MEASURED FROM THE INSIDE FACE OF THE STRUCTURE.
4. THE CONTRACTOR SHALL CONTACT "DIGSAFE" AND THE AT LEAST 72 HOURS PRIOR TO ANY EXCAVATION WORK TO REQUEST THE LOCATION OF THE EXISTING UTILITIES. DIGSAFE: 1-888-344-7233.
5. THE CONTRACTOR SHALL REVIEW THE RECORD PLAN ENTITLED "BUILDING DEMOLITION AND DEBRIS DISPOSAL AREA PLAN" OF 1988 AND VERIFY, IN THE FIELD, THE ELEVATION AND LOCATION OF THE DEBRIS AND STUMP BURIAL AREA. SPECIAL PRECAUTIONS SHALL BE TAKEN TO ENSURE THIS AREA IS NOT DISTURBED DURING CONSTRUCTION.
6. A LIMIT OF CLEARING MUST BE MARKED BY A MULCH LOG OR CONSTRUCTION FENCE.

DIG SAFE

BEFORE YOU DIG
CALL 811 OR
1-888-DIG-SAFE
1-888-344-7233

GRAPHIC SCALE

40 0 20 40 80 160

(IN FEET)
1 inch = 40 ft.

N:\PROJECTS\2118-02\CIVIL\DRAWINGS\CURRENT\C-2118-02 - EROSION CONTROL.DWG

TOWN OF HINGHAM LIST OF WAIVERS:

SECTION III-A-1.5 - SCHEDULE OF USES
- WAIVER OF THE PROHIBITION OF MULTI-FAMILY DWELLINGS IN THE OFFICE PARK DISTRICT.

SECTION IV-A - SCHEDULE OF DIMENSIONAL REQUIREMENTS
- WAIVER TO ALLOW FOR A MAXIMUM BUILDING HEIGHT OF 35 FEET (50.33'±).
- WAIVER TO ALLOW FOR A MAXIMUM FLOOR AREA RATIO OF 0.15 (0.60).
- WAIVER TO ALLOW FOR A MINIMUM FRONT YARD SETBACK OF 100 FEET (85.5 FEET).

SECTION IV-B-5 - SPECIAL REQUIREMENTS TO SCHEDULE OF DIMENSIONAL REQUIREMENTS
- WAIVER FOR A MINIMUM OF 20 FEET OF GREEN SPACE AROUND THE PERIMETER OF THE PROPERTY.

SECTION IV-B-6
- WAIVER TO ALLOW SITE PLAN REVIEW TO BE PERFORMED BY THE PLANNING BOARD.

SECTION IV-C-4 - GENERAL INTENSITY PROVISIONS
- WAIVER TO ALLOW MORE THAN ONE DWELLING UNIT PER ANY SINGLE LOT (200).

SECTION IV-E-1B - RESIDENTIAL MULTI-UNIT DEVELOPMENT
- WAIVER TO ALLOW THE NUMBER OF DWELLING UNITS PER ACRE TO BE MORE THAN 8 (18.2 UNITS/ACRE)

SECTION IV-E-1D
- WAIVER FROM PROVIDING 2000 S.F. OF LANDSCAPED SPACE PER DWELLING UNIT.

SECTION IV-E-1E
- WAIVER FROM PROVIDING 300 S.F. OF RECREATIONAL SPACE PER DWELLING UNIT.

SECTION IV-E-1F
- WAIVER FROM PROVIDING 50 FEET OF LANDSCAPED BUFFER ADJACENT TO EACH PROPERTY LINE.

SECTION IV-E-1G
- WAIVER FROM PROVIDING 300 S.F. OF RECREATIONAL SPACE PER DWELLING UNIT.

SECTION IV-E-1I
- WAIVER ALLOWING LESS THAN TWO PARKING SPACES PER DWELLING UNIT (1.55 STALLS/UNIT).

SECTION IV-E-5E
- WAIVER TO DEFER TO CURRENT DHCD LOCAL PREFERENCE CATEGORIES.

SECTION V-A-2 - OFF-STREET PARKING REQUIREMENTS
- WAIVER FROM A MINIMUM OF 2.0 PARKING STALLS PER UNIT (1.55 STALLS/UNIT).

SECTION V-A-3 - OFF-STREET PARKING REQUIREMENTS
- WAIVER FROM MINIMUM AISLE WIDTH FOR A PARKING STALL WITH NO OVERHANG

SECTION V-C-1A - EARTH REMOVAL REGULATIONS
- WAIVER ALLOWING THE REMOVAL OF SOIL, LOAM, SAND, GRAVEL, ETC. TO BE REMOVED FROM A LOT.

ARTICLE 10 - PUBLIC WAYS AND COMMON LAND
- WAIVER TO HAVE THE ZONING BOARD OF APPEALS BE THE PERMIT ISSUING AUTHORITY INSTEAD OF THE BOARD OF SELECTMEN.

ARTICLE 10-34A
- WAIVER ALLOWING SOIL, LOAM, SAND, OR GRAVEL FROM LAND IN TOWN NOT IN PUBLIC USE TO ANY LOCATIONS OUTSIDE OF THE TOWN.

ARTICLE 22-5
- WAIVER FROM THE CONSERVATION COMMISSION HAVING THE AUTHORIZATION TO DENY THE PROJECT

ARTICLE 22-8
- WAIVER REQUESTED AS A BOND IS ALREADY REQUIRED OF THE APPLICANT AS PART OF THE 40B PROCESS.

COMMONWEALTH OF MASSACHUSETTS
CARLTON M. QUINN
CIVIL
No.49923
REGISTERED PROFESSIONAL ENGINEER

PROFESSIONAL ENGINEER FOR
ALLEN & MAJOR ASSOCIATES, INC.

REV	DATE	DESCRIPTION
3.	01/04/2017	ISSUED FOR ZBA RESUBMITTAL
2.	11/2/2016	ISSUED FOR ZBA RESUBMITTAL
1.	10/25/2016	ISSUED FOR ZBA RESUBMITTAL

APPLICANT\OWNER:
BROADSTONE BARE COVE ALLIANCE, LLC. C/O
ALLIANCE RESIDENTIAL COMPANY
184 HIGH STREET, SUITE 401
BOSTON, MA 02110

PROJECT:
BROADSTONE BARE COVE
230 BEAL STREET
HINGHAM, MA

PROJECT NO.	2118-02	DATE:	08-12-2016
SCALE:	1" = 40'	DWG. NAME:	C2118-02
DESIGNED BY:	SJL	CHECKED BY:	CMQ

PREPARED BY:

ALLEN & MAJOR ASSOCIATES, INC.
civil & structural engineering ◆ land surveying
environmental consulting ◆ landscape architecture
www.allenmajor.com
100 COMMERCE WAY
P.O. BOX 2118
WOBURN MA 01888-0118
TEL: (781) 935-6889
FAX: (781) 935-2896
WOBURN, MA ◆ LAKEVILLE, MA ◆ MANCHESTER, NH

THIS DRAWING HAS BEEN PREPARED IN ELECTRONIC FORMAT. CLIENT/CLIENT'S REPRESENTATIVE OR CONSULTANT MAY BE PROVIDED COPIES OF DRAWINGS AND SPECIFICATIONS ON MAGNETIC MEDIA FOR HIS/HER INFORMATION AND USE FOR SPECIFIC APPLICATION TO THIS PROJECT. DUE TO THE POTENTIAL THAT THE MAGNETIC INFORMATION MAY BE MODIFIED UNINTENTIONALLY OR OTHERWISE, ALLEN & MAJOR ASSOCIATES, INC. MAY REMOVE ALL INDICATION OF THE DOCUMENT'S AUTHORSHIP ON THE MAGNETIC MEDIA. PRINTED REPRESENTATIONS OF THE DRAWINGS AND SPECIFICATIONS ISSUED SHALL BE THE ONLY RECORD COPIES OF ALLEN & MAJOR ASSOCIATES, INC.'S WORK PRODUCT.

DRAWING TITLE:
EROSION CONTROL PLAN

Copyright©2017 Allen & Major Associates, Inc.
All Rights Reserved

SHEET No.
C-6B

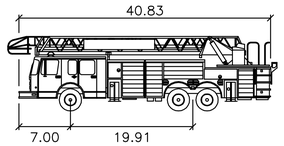

Hingham Fire Truck

	feet
Width	: 8.0
Track	: 8.50
Lock to Lock Time	: 6.0
Steering Angle	: 26.0

NOTES:

1. THE INFORMATION SHOWN ON THIS PLAN IS THE SOLE PROPERTY OF ALLEN & MAJOR ASSOCIATES, INC. IT'S INTENDED USE IS TO PROVIDE INFORMATION. ANY ALTERATION, MISUSE, OR RECALCULATION OF INFORMATION OR DATA WITHOUT THE EXPRESSED, WRITTEN CONSENT OF ALLEN & MAJOR ASSOCIATES, INC. IS STRICTLY PROHIBITED.

2. ALL HYDRANT AND FIRE DEPARTMENT CONNECTION LOCATIONS TO BE REVIEWED WITH FIRE DEPARTMENT PRIOR TO INSTALLATION.

3. THE CONTRACTOR SHALL REVIEW THE RECORD PLAN ENTITLED "BUILDING DEMOLITION AND DEBRIS DISPOSAL AREA PLAN" OF 1988 AND VERIFY, IN THE FIELD, THE ELEVATION AND LOCATION OF THE DEBRIS AND STUMP BURIAL AREA. SPECIAL PRECAUTIONS SHALL BE TAKEN TO ENSURE THIS AREA IS NOT DISTURBED DURING CONSTRUCTION.

DIG SAFE

BEFORE YOU DIG
CALL 811 OR
1-888-DIG-SAFE
1-888-344-7233

GRAPHIC SCALE

50 0 25 50 100 200

(IN FEET)
1 inch = 50 ft.

N:\PROJECTS\2118-02\CIVIL\DRAWINGS\CURRENT\C-2118-02 - TRUCK TURNING (FIRE).DWG

TOWN OF HINGHAM LIST OF WAIVERS:

SECTION III-A-1.5 - SCHEDULE OF USES
- WAIVER OF THE PROHIBITION OF MULTI-FAMILY DWELLINGS IN THE OFFICE PARK DISTRICT.

SECTION IV-A - SCHEDULE OF DIMENSIONAL REQUIREMENTS
- WAIVER TO ALLOW FOR A MAXIMUM BUILDING HEIGHT OF 35 FEET (50.33'±).
- WAIVER TO ALLOW FOR A MAXIMUM FLOOR AREA RATIO OF 0.15 (0.60).
- WAIVER TO ALLOW FOR A MINIMUM FRONT YARD SETBACK OF 100 FEET (85.5 FEET).

SECTION IV-B-5 - SPECIAL REQUIREMENTS TO SCHEDULE OF DIMENSIONAL REQUIREMENTS
- WAIVER FOR A MINIMUM OF 20 FEET OF GREEN SPACE AROUND THE PERIMETER OF THE PROPERTY.

SECTION IV-B-6
- WAIVER TO ALLOW SITE PLAN REVIEW TO BE PERFORMED BY THE PLANNING BOARD.

SECTION IV-C-4 - GENERAL INTENSITY PROVISIONS
- WAIVER TO ALLOW MORE THAN ONE DWELLING UNIT PER ANY SINGLE LOT (200).

SECTION IV-E-1B - RESIDENTIAL MULTI-UNIT DEVELOPMENT
- WAIVER TO ALLOW THE NUMBER OF DWELLING UNITS PER ACRE TO BE MORE THAN 8 (18.2 UNITS/ACRE)

SECTION IV-E-1D
- WAIVER FROM PROVIDING 2000 S.F. OF LANDSCAPED SPACE PER DWELLING UNIT.

SECTION IV-E-1E
- WAIVER FROM PROVIDING 300 S.F. OF RECREATIONAL SPACE PER DWELLING UNIT.

SECTION IV-E-1F
- WAIVER FROM PROVIDING 50 FEET OF LANDSCAPED BUFFER ADJACENT TO EACH PROPERTY LINE.

SECTION IV-E-1G
- WAIVER FROM PROVIDING 300 S.F. OF RECREATIONAL SPACE PER DWELLING UNIT.

SECTION IV-E-1I
- WAIVER ALLOWING LESS THAN TWO PARKING SPACES PER DWELLING UNIT (1.55 STALLS/UNIT).

SECTION IV-E-5E
- WAIVER TO DEFER TO CURRENT DHCD LOCAL PREFERENCE CATEGORIES.

SECTION V-A-2 - OFF-STREET PARKING REQUIREMENTS
- WAIVER FROM A MINIMUM OF 2.0 PARKING STALLS PER UNIT (1.55 STALLS/UNIT).

SECTION V-A-3 - OFF-STREET PARKING REQUIREMENTS
- WAIVER FROM MINIMUM AISLE WIDTH FOR A PARKING STALL WITH NO OVERHANG

SECTION V-C-1A - EARTH REMOVAL REGULATIONS
- WAIVER ALLOWING THE REMOVAL OF SOIL, LOAM, SAND, GRAVEL, ETC. TO BE REMOVED FROM A LOT.

ARTICLE 10 - PUBLIC WAYS AND COMMON LAND
- WAIVER TO HAVE THE ZONING BOARD OF APPEALS BE THE PERMIT ISSUING AUTHORITY INSTEAD OF THE BOARD OF SELECTMEN.

ARTICLE 10-34A
- WAIVER ALLOWING SOIL, LOAM, SAND, OR GRAVEL FROM LAND IN TOWN NOT IN PUBLIC USE TO ANY LOCATIONS OUTSIDE OF THE TOWN.

ARTICLE 22-5
- WAIVER FROM THE CONSERVATION COMMISSION HAVING THE AUTHORIZATION TO DENY THE PROJECT

ARTICLE 22-8
- WAIVER REQUESTED AS A BOND IS ALREADY REQUIRED OF THE APPLICANT AS PART OF THE 40B PROCESS.

COMMONWEALTH OF MASSACHUSETTS
CARLTON M. QUINN
CIVIL
No.49923
REGISTERED PROFESSIONAL ENGINEER

PROFESSIONAL ENGINEER FOR
ALLEN & MAJOR ASSOCIATES, INC.

REV	DATE	DESCRIPTION
3.	01/04/2017	ISSUED FOR ZBA RESUBMITTAL
2.	11/2/2016	ISSUED FOR ZBA RESUBMITTAL
1.	10/25/2016	ISSUED FOR ZBA RESUBMITTAL

APPLICANT\OWNER:
BROADSTONE BARE COVE ALLIANCE, LLC. C/O
ALLIANCE RESIDENTIAL COMPANY
184 HIGH STREET, SUITE 401
BOSTON, MA 02110

PROJECT:
BROADSTONE BARE COVE
230 BEAL STREET
HINGHAM, MA

PROJECT NO.	2118-02	DATE:	08-12-2016
SCALE:	1" = 80'	DWG. NAME:	C2118-02
DESIGNED BY:	SJL	CHECKED BY:	CMQ

PREPARED BY:

ALLEN & MAJOR ASSOCIATES, INC.
civil & structural engineering ◆ land surveying
environmental consulting ◆ landscape architecture
www.allenmajor.com
100 COMMERCE WAY
P.O. BOX 2118
WOBURN MA 01888-0118
TEL: (781) 935-6889
FAX: (781) 935-2896
WOBURN, MA ◆ LAKEVILLE, MA ◆ MANCHESTER, NH

THIS DRAWING HAS BEEN PREPARED IN ELECTRONIC FORMAT. CLIENT/CLIENT'S REPRESENTATIVE OR CONSULTANT MAY BE PROVIDED COPIES OF DRAWINGS AND SPECIFICATIONS ON MAGNETIC MEDIA FOR HIS/HER INFORMATION AND USE FOR SPECIFIC APPLICATION TO THIS PROJECT. DUE TO THE POTENTIAL THAT THE MAGNETIC INFORMATION MAY BE MODIFIED UNINTENTIONALLY OR OTHERWISE, ALLEN & MAJOR ASSOCIATES, INC. MAY REMOVE ALL INDICATION OF THE DOCUMENT'S AUTHORSHIP ON THE MAGNETIC MEDIA. PRINTED REPRESENTATIONS OF THE DRAWINGS AND SPECIFICATIONS ISSUED SHALL BE THE ONLY RECORD COPIES OF ALLEN & MAJOR ASSOCIATES, INC.'S WORK PRODUCT.

DRAWING TITLE:
FIRE TRUCK TURNING PLAN

SHEET No.
C-7A

Copyright©2017 Allen & Major Associates, Inc.
All Rights Reserved

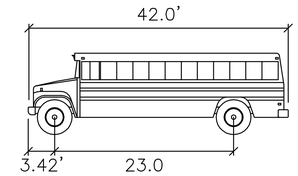

	feet
Width	: 9.00
Track	: 9.00
Lock to Lock Time	: 6.0
Steering Angle	: 37.8

HINGHAM SCHOOL BUS

NOTES:

1. THE INFORMATION SHOWN ON THIS PLAN IS THE SOLE PROPERTY OF ALLEN & MAJOR ASSOCIATES, INC. IT'S INTENDED USE IS TO PROVIDE INFORMATION. ANY ALTERATION, MISUSE, OR RECALCULATION OF INFORMATION OR DATA WITHOUT THE EXPRESSED, WRITTEN CONSENT OF ALLEN & MAJOR ASSOCIATES, INC. IS STRICTLY PROHIBITED.

2. THE CONTRACTOR SHALL REVIEW THE RECORD PLAN ENTITLED "BUILDING DEMOLITION AND DEBRIS DISPOSAL AREA PLAN" OF 1988 AND VERIFY, IN THE FIELD, THE ELEVATION AND LOCATION OF THE DEBRIS AND STUMP BURIAL AREA. SPECIAL PRECAUTIONS SHALL BE TAKEN TO ENSURE THIS AREA IS NOT DISTURBED DURING CONSTRUCTION.

DIG SAFE

BEFORE YOU DIG
CALL 811 OR
1-888-DIG-SAFE
1-888-344-7233

GRAPHIC SCALE

50 0 25 50 100 200

(IN FEET)
1 inch = 50 ft.

N:\PROJECTS\2118-02\CIVIL\DRAWINGS\CURRENT\C-2118-02 - TRUCK TURNING (SCHOOL BUS).DWG

TOWN OF HINGHAM LIST OF WAIVERS:

SECTION III-A-1.5 - SCHEDULE OF USES
- WAIVER OF THE PROHIBITION OF MULTI-FAMILY DWELLINGS IN THE OFFICE PARK DISTRICT.

SECTION IV-A - SCHEDULE OF DIMENSIONAL REQUIREMENTS
- WAIVER TO ALLOW FOR A MAXIMUM BUILDING HEIGHT OF 35 FEET (50.33'±).
- WAIVER TO ALLOW FOR A MAXIMUM FLOOR AREA RATIO OF 0.15 (0.60).
- WAIVER TO ALLOW FOR A MINIMUM FRONT YARD SETBACK OF 100 FEET (85.5 FEET).

SECTION IV-B-5 - SPECIAL REQUIREMENTS TO SCHEDULE OF DIMENSIONAL REQUIREMENTS
- WAIVER FOR A MINIMUM OF 20 FEET OF GREEN SPACE AROUND THE PERIMETER OF THE PROPERTY.

SECTION IV-B-6
- WAIVER TO ALLOW SITE PLAN REVIEW TO BE PERFORMED BY THE PLANNING BOARD.

SECTION IV-C-4 - GENERAL INTENSITY PROVISIONS
- WAIVER TO ALLOW MORE THAN ONE DWELLING UNIT PER ANY SINGLE LOT (200).

SECTION IV-E-1B - RESIDENTIAL MULTI-UNIT DEVELOPMENT
- WAIVER TO ALLOW THE NUMBER OF DWELLING UNITS PER ACRE TO BE MORE THAN 8 (18.2 UNITS/ACRE)

SECTION IV-E-1D
- WAIVER FROM PROVIDING 2000 S.F. OF LANDSCAPED SPACE PER DWELLING UNIT.

SECTION IV-E-1E
- WAIVER FROM PROVIDING 300 S.F. OF RECREATIONAL SPACE PER DWELLING UNIT.

SECTION IV-E-1F
- WAIVER FROM PROVIDING 50 FEET OF LANDSCAPED BUFFER ADJACENT TO EACH PROPERTY LINE.

SECTION IV-E-1G
- WAIVER FROM PROVIDING 300 S.F. OF RECREATIONAL SPACE PER DWELLING UNIT.

SECTION IV-E-1I
- WAIVER ALLOWING LESS THAN TWO PARKING SPACES PER DWELLING UNIT (1.55 STALLS/UNIT).

SECTION IV-E-5E
- WAIVER TO DEFER TO CURRENT DHCD LOCAL PREFERENCE CATEGORIES.

SECTION V-A-2 - OFF-STREET PARKING REQUIREMENTS
- WAIVER FROM A MINIMUM OF 2.0 PARKING STALLS PER UNIT (1.55 STALLS/UNIT).

SECTION V-A-3 - OFF-STREET PARKING REQUIREMENTS
- WAIVER FROM MINIMUM AISLE WIDTH FOR A PARKING STALL WITH NO OVERHANG

SECTION V-C-1A - EARTH REMOVAL REGULATIONS
- WAIVER ALLOWING THE REMOVAL OF SOIL, LOAM, SAND, GRAVEL, ETC. TO BE REMOVED FROM A LOT.

ARTICLE 10 - PUBLIC WAYS AND COMMON LAND
- WAIVER TO HAVE THE ZONING BOARD OF APPEALS BE THE PERMIT ISSUING AUTHORITY INSTEAD OF THE BOARD OF SELECTMEN.

ARTICLE 10-34A
- WAIVER ALLOWING SOIL, LOAM, SAND, OR GRAVEL FROM LAND IN TOWN NOT IN PUBLIC USE TO ANY LOCATIONS OUTSIDE OF THE TOWN.

ARTICLE 22-5
- WAIVER FROM THE CONSERVATION COMMISSION HAVING THE AUTHORIZATION TO DENY THE PROJECT

ARTICLE 22-8
- WAIVER REQUESTED AS A BOND IS ALREADY REQUIRED OF THE APPLICANT AS PART OF THE 40B PROCESS.

COMMONWEALTH OF MASSACHUSETTS
CARLTON M. QUINN
CIVIL
No.49923
REGISTERED PROFESSIONAL ENGINEER

PROFESSIONAL ENGINEER FOR
ALLEN & MAJOR ASSOCIATES, INC.

REV	DATE	DESCRIPTION
3.	01/04/2017	ISSUED FOR ZBA RESUBMITTAL
2.	11/2/2016	ISSUED FOR ZBA RESUBMITTAL
1.	10/25/2016	ISSUED FOR ZBA RESUBMITTAL

APPLICANT\OWNER:
BROADSTONE BARE COVE ALLIANCE, LLC. C/O
ALLIANCE RESIDENTIAL COMPANY
184 HIGH STREET, SUITE 401
BOSTON, MA 02110

PROJECT:
BROADSTONE BARE COVE
230 BEAL STREET
HINGHAM, MA

PROJECT NO.	2118-02	DATE:	08-12-2016
SCALE:	1" = 50'	DWG. NAME:	C2118-02
DESIGNED BY:	SJL	CHECKED BY:	CMQ

PREPARED BY:
ALLEN & MAJOR ASSOCIATES, INC.
civil & structural engineering ◆ land surveying
environmental consulting ◆ landscape architecture
www.allenmajor.com
100 COMMERCE WAY
P.O. BOX 2118
WOBURN MA 01888-0118
TEL: (781) 935-6889
FAX: (781) 935-2896
WOBURN, MA ◆ LAKEVILLE, MA ◆ MANCHESTER, NH

THIS DRAWING HAS BEEN PREPARED IN ELECTRONIC FORMAT. CLIENT/CLIENT'S REPRESENTATIVE OR CONSULTANT MAY BE PROVIDED COPIES OF DRAWINGS AND SPECIFICATIONS ON MAGNETIC MEDIA FOR HIS/HER INFORMATION AND USE FOR SPECIFIC APPLICATION TO THIS PROJECT. DUE TO THE POTENTIAL THAT THE MAGNETIC INFORMATION MAY BE MODIFIED UNINTENTIONALLY OR OTHERWISE, ALLEN & MAJOR ASSOCIATES, INC. MAY REMOVE ALL INDICATION OF THE DOCUMENT'S AUTHORSHIP ON THE MAGNETIC MEDIA. PRINTED REPRESENTATIONS OF THE DRAWINGS AND SPECIFICATIONS ISSUED SHALL BE THE ONLY RECORD COPIES OF ALLEN & MAJOR ASSOCIATES, INC.'S WORK PRODUCT.

DRAWING TITLE:
SCHOOL BUS TURNING PLAN

SHEET No.
C-7B

Copyright©2017 Allen & Major Associates, Inc.
All Rights Reserved

1. TRAFFIC AND SAFETY SIGNAGE SHALL COMPLY WITH MUTCD STANDARDS.
2. LIMITED TIME PARKING SIGN SHALL BE PRODUCT #W4986 BY SAFETYSIGN.COM, BRIMAR INDUSTRIES, INC. (800) 274-6271 OR APPROVED EQUAL.

DESC.	SIGN	SIZE	MOUNTING HEIGHT	DESCRIPTION	REFLECTORIZED
R1-1	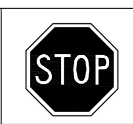	30" x 30"	7' - 0"	WHITE ON RED	YES
R7-8		12" x 20"	7' - 0"	GREEN & BLUE ON WHITE	NO
R7-8 (MODIFIED)	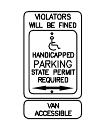	12" x 20"	7' - 0"	GREEN & BLUE ON WHITE	NO
R8-1 (MODIFIED)		12"x18"	7' - 0"	RED ON WHITE	NO
R3-2		24"x24"	7' - 0"	BLACK & RED ON WHITE	YES
R1-6	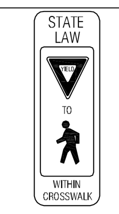	12"x36"	GROUND LEVEL	BLACK & RED ON FLUORESCENT YELLOW /GREEN	YES
W15-1		30"x30"	7' - 0"	BLACK ON FLUORESCENT YELLOW /GREEN	YES

SIGN TABLE
NOT TO SCALE
1

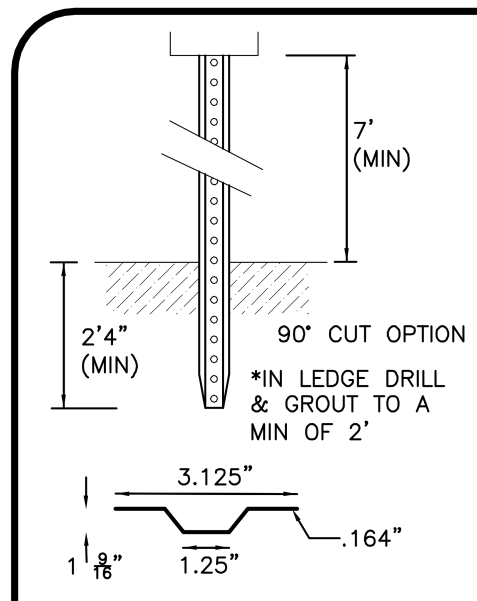

STANDARD SIGN POST
NOT TO SCALE

LENGTH: AS REQUIRED
WEIGHT PER LF: 2.50 LBS (MIN)
HOLES: 3/8" DIAMETER, 1" C-C FULL LENGTH
STEEL: SHALL CONFORM TO ASTM A-499 OR ASTM A-576
FINISH: SHALL BE PAINTED WITH 2 COATS OF AN APPROVED MEDIUM GREEN, BAKED ON OR AIR DRIED, PAINT OF WEATHER RESISTANT QUALITY.

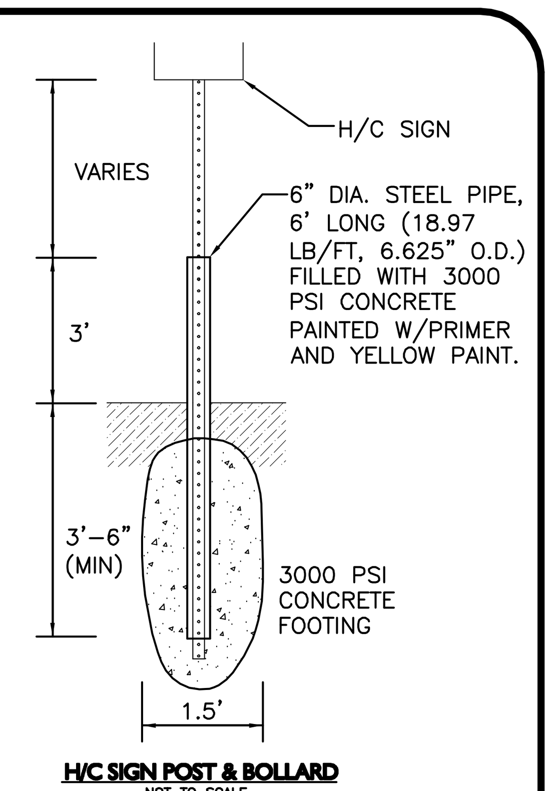

H/C SIGN POST & BOLLARD
NOT TO SCALE

NOTE:
1. STEEL PIPE BOLLARD & CONCRETE FOOTING TO BE USED ON POST MOUNTED SIGNS IN PAVED AREAS.

SIGN POST DETAIL
NOT TO SCALE
2

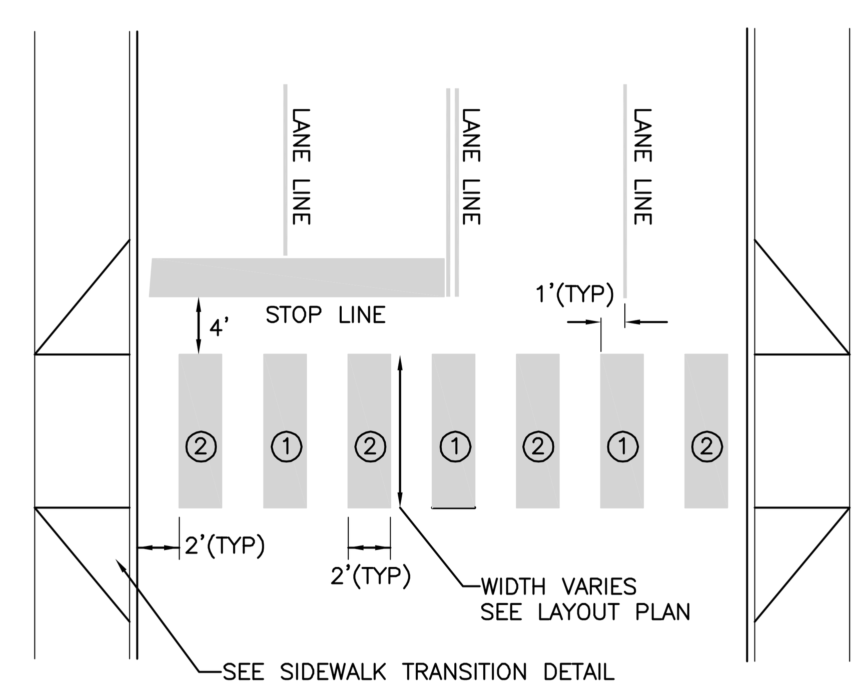

NOTE:
(1) LANE LINE STRIP: THIS IS LOCATED IN THE LINE WITH EACH LANE LINE AND HALF THE STRIP ON EACH SIDE.
(2) MID LINE STRIP: THIS IS LOCATED MIDWAY BETWEEN EACH LANE LINE STRIP.

CROSSWAK STRIPING
NOT TO SCALE
3

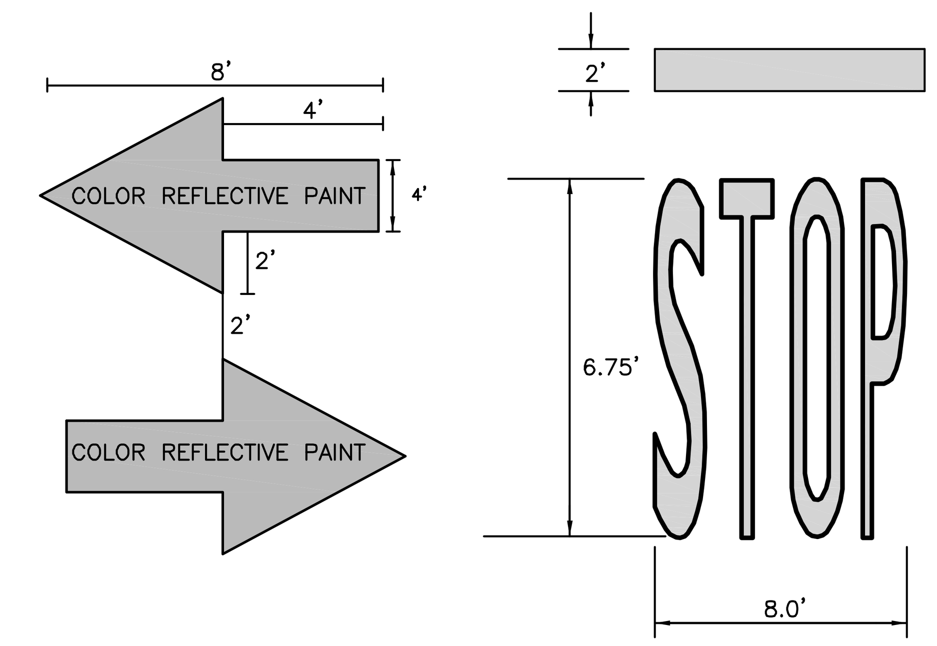

WHITE THERMOPLASTIC LETTERING/ARROWS
NOT TO SCALE
4

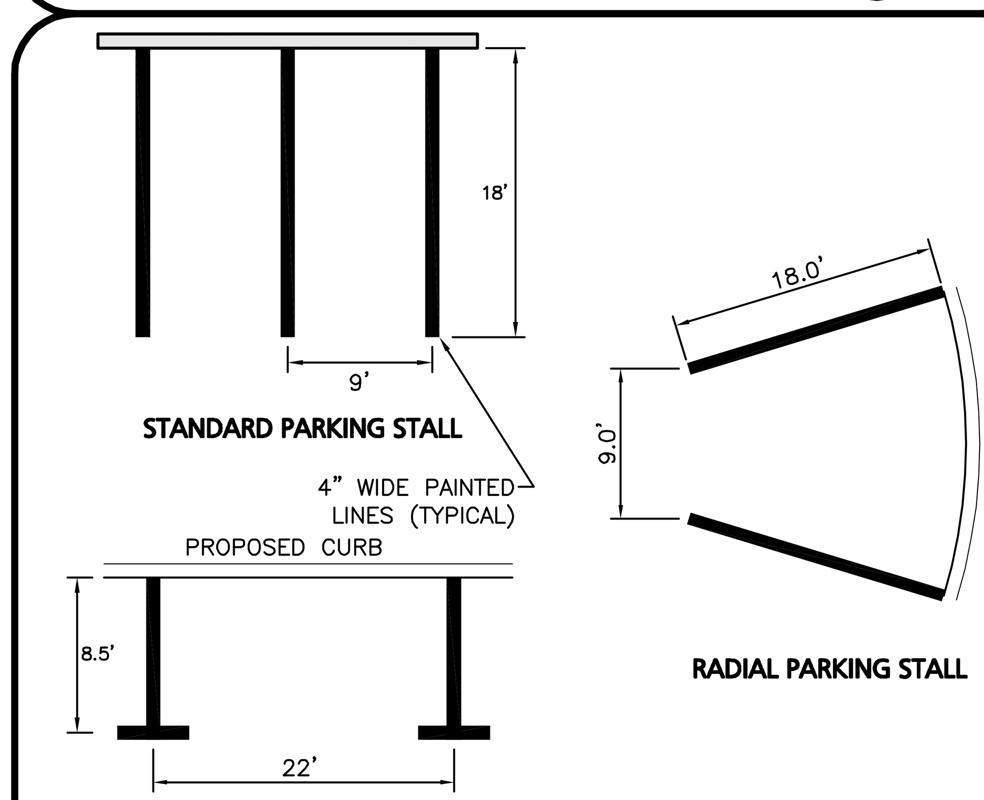

STANDARD PARKING STRIPING
NOT TO SCALE
5

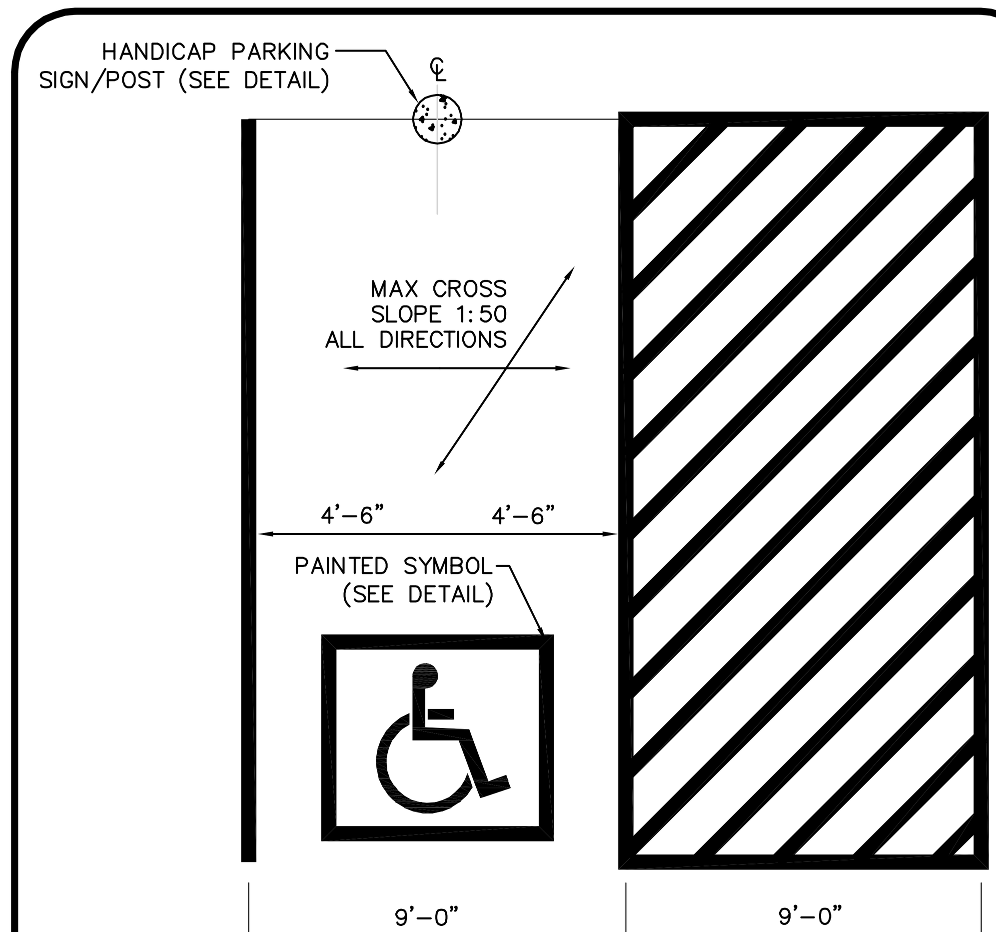

TYPICAL ACCESSIBLE HANDICAP PARKING STALL
NOT TO SCALE
6

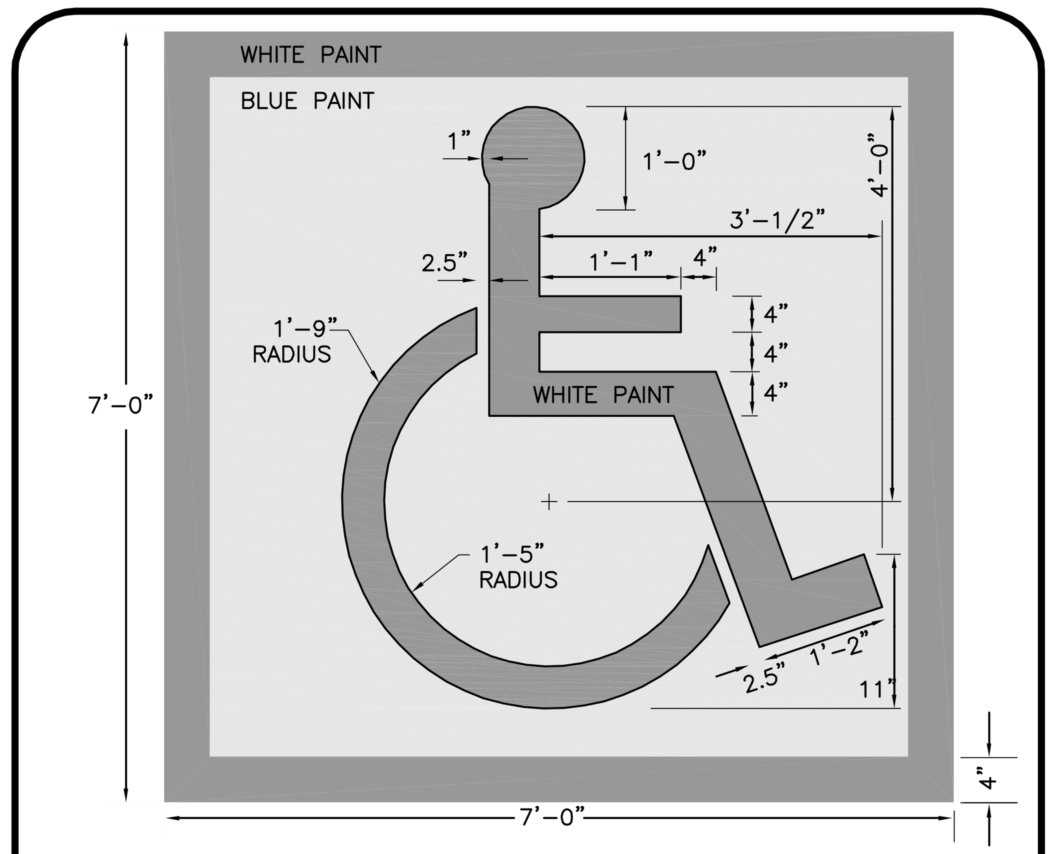

SYMBOL TO BE CENTERED ON WIDTH OF PARKING STALL. SYMBOL IS REQUIRED TO CONTRAST WITH BACKGROUND. USE WHITE ON BLUE (COLOR #105090 IN FEDERAL STANDARD 5952) DOUBLE COAT.

ACCESSIBLE PARKING STALL PAVEMENT MARKING
NOT TO SCALE
7

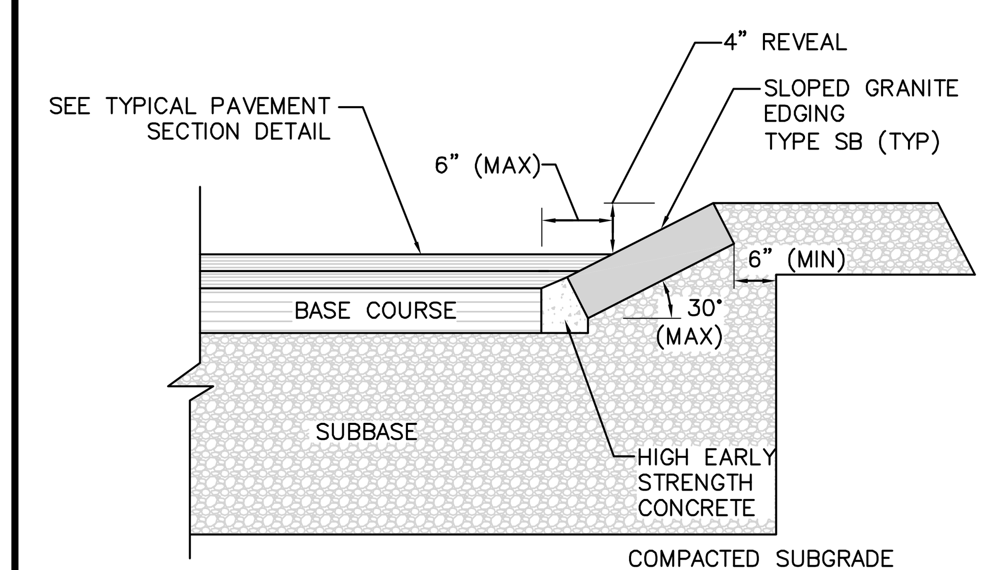

NOTE:
1. SLOPED GRANITE CURB TO BE USED IN ALL LOCATIONS OTHER THAN THOSE ADJACENT TO SIDEWALK OR HARDSCAPE.

SLOPED GRANITE CURB
NOT TO SCALE
8

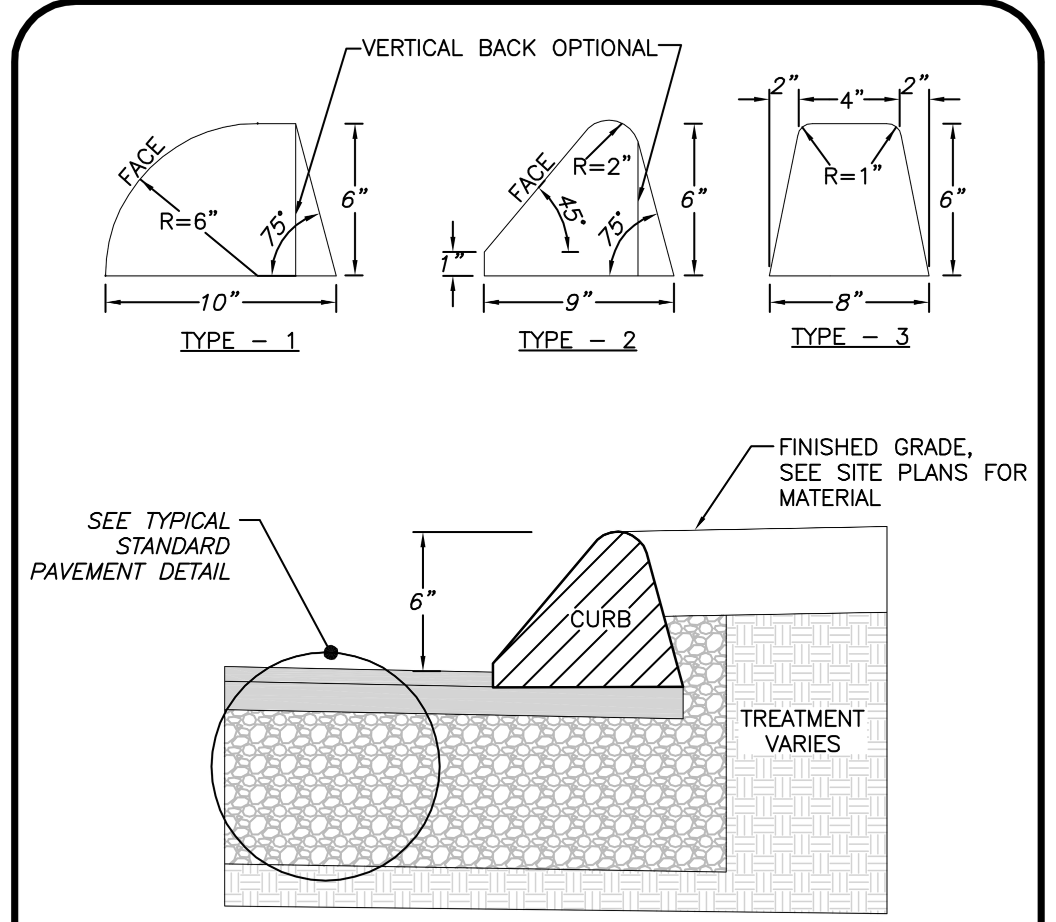

BITUMINOUS CONCRETE CURB
NOT TO SCALE
9

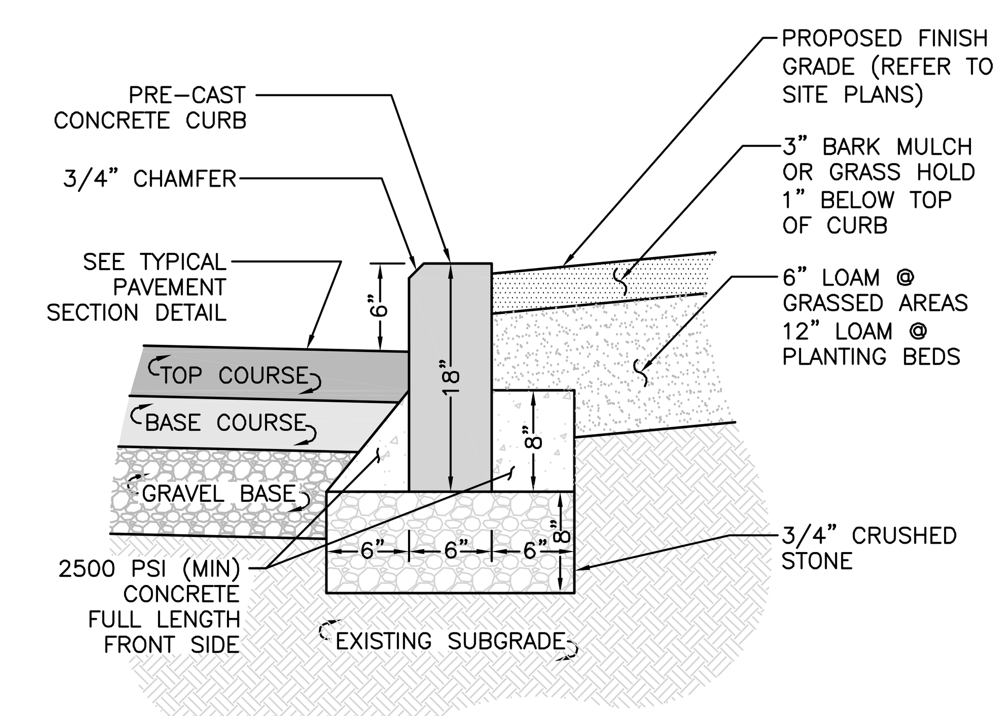

PRE-CAST CONCRETE CURB DETAIL
NOT TO SCALE
10

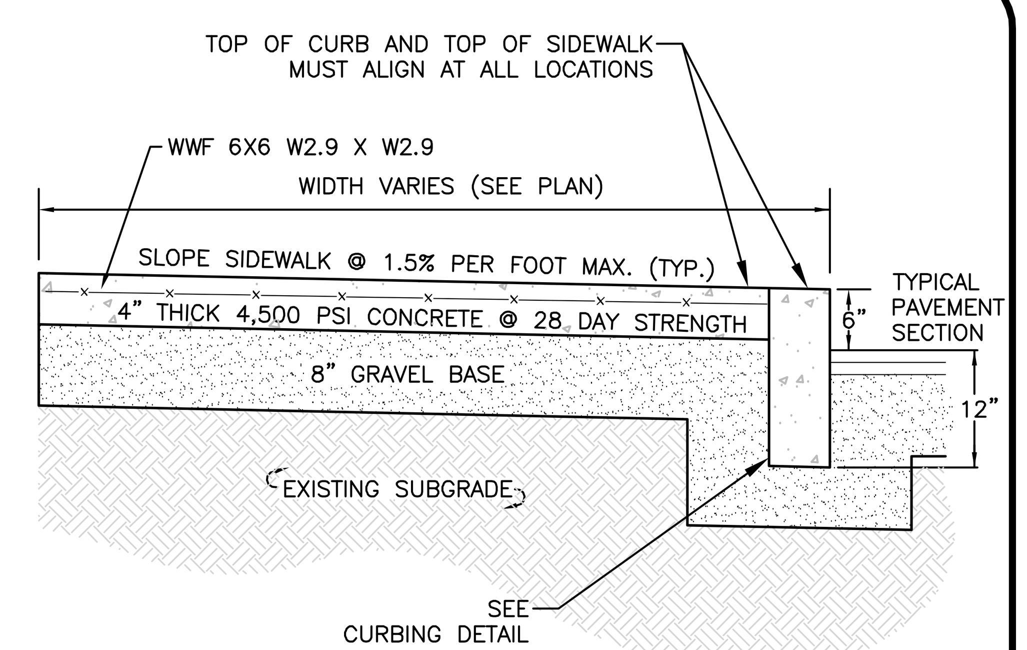

NOTES:
1. SIDEWALK TO HAVE TOOLED JOINTS IN A 5' x 5' (TYP.) GRID WITH EXPANSION JOINTS 15' ON CENTER AND PREMOLDED FILLER.
2. TOOLED JOINT 6" FROM FACE OF CURB
3. SEE PLAN FOR ELEVATIONS AT CURB
4. SIDEWALK CROSS SLOPE TO BE 1.5% MAX & SIDEWALK LONGITUDINAL RUNNING SLOPE TO BE 4.5% MAX, TYP.

CONCRETE SIDEWALK DETAIL
NOT TO SCALE
11

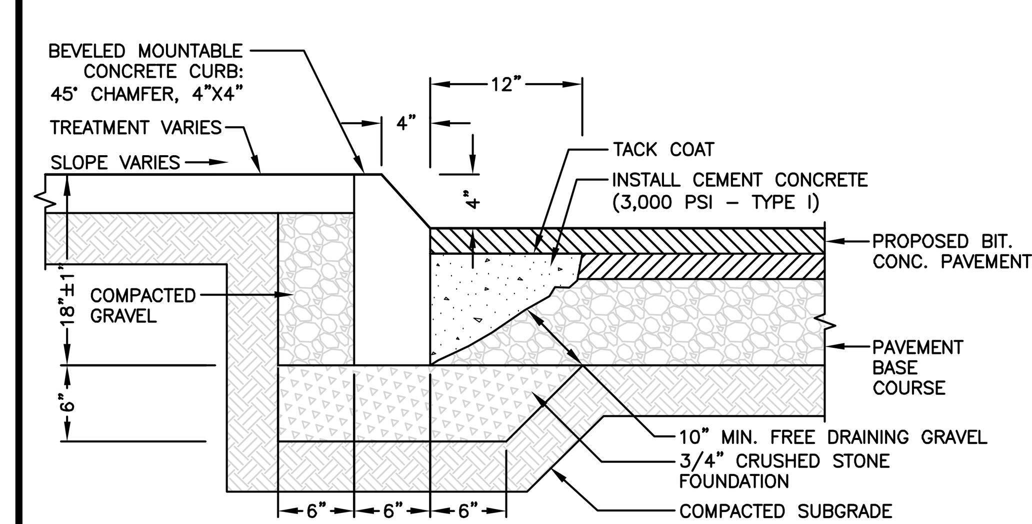

NOTES:
1. STRAIGHT CURBS SHALL BE CUT IN RANDOM LENGTHS OF 3' MINIMUM TO 6' MAXIMUM.
2. CURB ON RADIUS OF 160' OR LESS SHALL BE CUT TO CORRECT RADIUS (MEASURED OUTSIDE FACE OF CURB).
3. CURB UNITS SHALL BE PLACED IN ACCURATE LINE BUTTING THE NEXT WITH MAXIMUM JOINT SPACING OF 1/4".
4. TOP SURFACE TO BE DRESSED BY SAW.

CONCRETE CURB - BEVELED MOUNTABLE
NOT TO SCALE
12

N:\PROJECTS\2118-02\CIVIL\DRAWINGS\CURRENT\C-2118-02 - DETAILS.DWG

TOWN OF HINGHAM LIST OF WAIVERS:

SECTION III-A-1.5 - SCHEDULE OF USES
- WAIVER OF THE PROHIBITION OF MULTI-FAMILY DWELLINGS IN THE OFFICE PARK DISTRICT.

SECTION IV-A - SCHEDULE OF DIMENSIONAL REQUIREMENTS
- WAIVER TO ALLOW FOR A MAXIMUM BUILDING HEIGHT OF 35 FEET (50.33'±).
- WAIVER TO ALLOW FOR A MAXIMUM FLOOR AREA RATIO OF 0.15 (0.60).
- WAIVER TO ALLOW FOR A MINIMUM FRONT YARD SETBACK OF 100 FEET (85.5 FEET).

SECTION IV-B-5 - SPECIAL REQUIREMENTS TO SCHEDULE OF DIMENSIONAL REQUIREMENTS
- WAIVER FOR A MINIMUM OF 20 FEET OF GREEN SPACE AROUND THE PERIMETER OF THE PROPERTY.

SECTION IV-B-6
- WAIVER TO ALLOW SITE PLAN REVIEW TO BE PERFORMED BY THE PLANNING BOARD.

SECTION IV-C-4 - GENERAL INTENSITY PROVISIONS
- WAIVER TO ALLOW MORE THAN ONE DWELLING UNIT PER ANY SINGLE LOT (200).

SECTION IV-E-1B - RESIDENTIAL MULTI-UNIT DEVELOPMENT
- WAIVER TO ALLOW THE NUMBER OF DWELLING UNITS PER ACRE TO BE MORE THAN 8 (18.2 UNITS/ACRE)

SECTION IV-E-1D
- WAIVER FROM PROVIDING 2000 S.F. OF LANDSCAPED SPACE PER DWELLING UNIT.

SECTION IV-E-1E
- WAIVER FROM PROVIDING 300 S.F. OF RECREATIONAL SPACE PER DWELLING UNIT.

SECTION IV-E-1F
- WAIVER FROM PROVIDING 50 FEET OF LANDSCAPED BUFFER ADJACENT TO EACH PROPERTY LINE.

SECTION IV-E-1G
- WAIVER FROM PROVIDING 300 S.F. OF RECREATIONAL SPACE PER DWELLING UNIT.

SECTION IV-E-1I
- WAIVER ALLOWING LESS THAN TWO PARKING SPACES PER DWELLING UNIT (1.55 STALLS/UNIT).

SECTION IV-E-5E
- WAIVER TO DEFER TO CURRENT DHCD LOCAL PREFERENCE CATEGORIES.

SECTION V-A-2 - OFF-STREET PARKING REQUIREMENTS
- WAIVER FROM A MINIMUM OF 2.0 PARKING STALLS PER UNIT (1.55 STALLS/UNIT).

SECTION V-A-3 - OFF-STREET PARKING REQUIREMENTS
- WAIVER FROM MINIMUM AISLE WIDTH FOR A PARKING STALL WITH NO OVERHANG

SECTION V-C-1A - EARTH REMOVAL REGULATIONS
- WAIVER ALLOWING THE REMOVAL OF SOIL, LOAM, SAND, GRAVEL, ETC. TO BE REMOVED FROM A LOT.

ARTICLE 10 - PUBLIC WAYS AND COMMON LAND
- WAIVER TO HAVE THE ZONING BOARD OF APPEALS BE THE PERMIT ISSUING AUTHORITY INSTEAD OF THE BOARD OF SELECTMEN.

ARTICLE 10-34A
- WAIVER ALLOWING SOIL, LOAM, SAND, OR GRAVEL FROM LAND IN TOWN NOT IN PUBLIC USE TO ANY LOCATIONS OUTSIDE OF THE TOWN.

ARTICLE 22-5
- WAIVER FROM THE CONSERVATION COMMISSION HAVING THE AUTHORIZATION TO DENY THE PROJECT

ARTICLE 22-8
- WAIVER REQUESTED AS A BOND IS ALREADY REQUIRED OF THE APPLICANT AS PART OF THE 40B PROCESS.

****

ISSUED FOR DRAINAGE REPORT
JANUARY 10, 2016

PROFESSIONAL ENGINEER FOR ALLEN & MAJOR ASSOCIATES, INC.

REV	DATE	DESCRIPTION
3.	01/04/2017	ISSUED FOR ZBA RESUBMITTAL
2.	11/2/2016	ISSUED FOR ZBA RESUBMITTAL
1.	10/25/2016	ISSUED FOR ZBA RESUBMITTAL

APPLICANT\OWNER:
BROADSTONE BARE COVE ALLIANCE, LLC. C/O
ALLIANCE RESIDENTIAL COMPANY
184 HIGH STREET, SUITE 401
BOSTON, MA 02110

PROJECT:
BROADSTONE BARE COVE
230 BEAL STREET
HINGHAM, MA

PROJECT NO.	2118-02	DATE:	08-12-2016
SCALE:	AS NOTED	DWG. NAME:	C2118-02
DESIGNED BY:	SJL	CHECKED BY:	CMQ

PREPARED BY:
ALLEN & MAJOR ASSOCIATES, INC.
civil & structural engineering ◆ land surveying
environmental consulting ◆ landscape architecture
www.allenmajor.com
100 COMMERCE WAY
P.O. BOX 2118
WOBURN MA 01888-0118
TEL: (781) 935-6889
FAX: (781) 935-2896
WOBURN, MA ◆ LAKEVILLE, MA ◆ MANCHESTER, NH

THIS DRAWING HAS BEEN PREPARED IN ELECTRONIC FORMAT. CLIENT/CLIENT'S REPRESENTATIVE OR CONSULTANT MAY BE PROVIDED COPIES OF DRAWINGS AND SPECIFICATIONS ON MAGNETIC MEDIA FOR HIS/HER INFORMATION AND USE FOR SPECIFIC APPLICATION TO THIS PROJECT. DUE TO THE POTENTIAL THAT THE MAGNETIC INFORMATION MAY BE MODIFIED UNINTENTIONALLY OR OTHERWISE, ALLEN & MAJOR ASSOCIATES, INC. MAY REMOVE ALL INDICATION OF THE DOCUMENT'S AUTHORSHIP ON THE MAGNETIC MEDIA. PRINTED REPRESENTATIONS OF THE DRAWINGS AND SPECIFICATIONS ISSUED SHALL BE THE ONLY RECORD COPIES OF ALLEN & MAJOR ASSOCIATES, INC.'S WORK PRODUCT.

DRAWING TITLE:	SHEET No.
DETAILS	D-1

Copyright ©2017 Allen & Major Associates, Inc.
All Rights Reserved

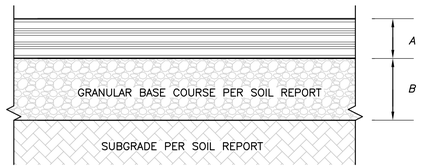

NOTES:

1. SURFACE COURSE, BASE, AND SUBGRADE SHALL BE PER GEOTECHNICAL ENGINEER'S RECOMMENDATIONS FOR LOCAL SOILS OR DRAINAGE CONDITIONS AND/OR METHODS.
2. SUBGRADE SHALL BE COMPACTED TO 95% OF PROCTOR.
3. COORDINATE PAVEMENT DETAIL WITH GOETECH & ENGINEER.

STANDARD DUTY PAVING

A = 1.5" ASPHALT CONCRETE – SURFACE COURSE (M3.11.03, TABLE A, TOP COURSE)
2.0" ASPHALT CONCRETE – BINDER COURSE (M3.11.03, TABLE A, BINDER COURSE)

B = 12" GRANULAR BASE COARSE – M1.03.1, PROCESSED GRAVEL FOR SUBBASE

STANDARD DUTY BITUMINOUS ROADWAY (1)
NOT TO SCALE

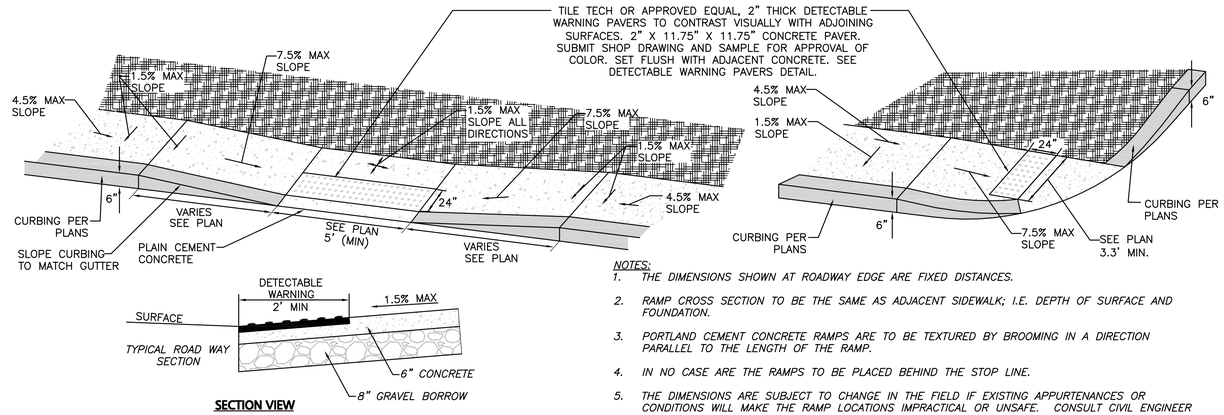

NOTES:

1. *THE DIMENSIONS SHOWN AT ROADWAY EDGE ARE FIXED DISTANCES.*
2. *RAMP CROSS SECTION TO BE THE SAME AS ADJACENT SIDEWALK; I.E. DEPTH OF SURFACE AND FOUNDATION.*
3. *PORTLAND CEMENT CONCRETE RAMPS ARE TO BE TEXTURED BY BROOMING IN A DIRECTION PARALLEL TO THE LENGTH OF THE RAMP.*
4. *IN NO CASE ARE THE RAMPS TO BE PLACED BEHIND THE STOP LINE.*
5. *THE DIMENSIONS ARE SUBJECT TO CHANGE IN THE FIELD IF EXISTING APPURTENANCES OR CONDITIONS WILL MAKE THE RAMP LOCATIONS IMPRACTICAL OR UNSAFE. CONSULT CIVIL ENGINEER PRIOR TO MAKING ANY MODIFICATIONS.*

HANDICAP CURB CUT & CURB TRANSITION (2)
NOT TO SCALE

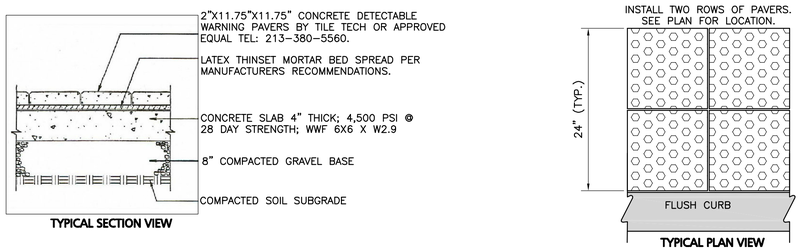

NOTES:

1. CONCRETE SLAB SHALL BE SLOPED 1.5% CROSS PITCH MAX TO PROVIDE COMPLETE SURFACE DRAINAGE. SEE GRADING PLAN & HANDICAP CURB CUT / CURB TRANSISTION DETAIL.
2. SLAB TO HAVE STEEL TROWEL AND FINE BROOM FINISH. DO NOT USE CURING COMPOUNDS. CONTRACTOR TO ADD EXPANSION JOINTS AND PREMOLDED FILLER AT EDGE OF TILES AND ADJACENT MATERIAL.
3. SET TILES FLUSH WITH ADJACENT MATERIALS.
4. SUBMIT SHOP DRAWINGS OF TILES AND SAMPLE FOR APPROVAL OF COLOR TO OWNER / ARCH.
5. INSTALL DETECTABLE WARNING PAVERS PER MANUFACTURER'S RECOMMENDATIONS.

DETECTABLE WARNING PAVERS (3)
NOT TO SCALE

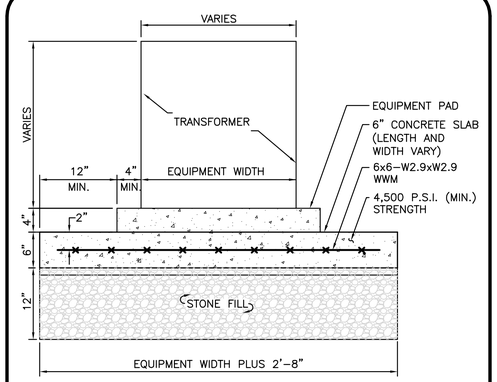

NOTE:
REFERENCE MECHANICAL ENGINEER'S PLANS FOR ANY PIPE, CONDUIT AND GROUND WIRE LOCATIONS

TRANSFORMER PAD DETAIL (4)
NOT TO SCALE

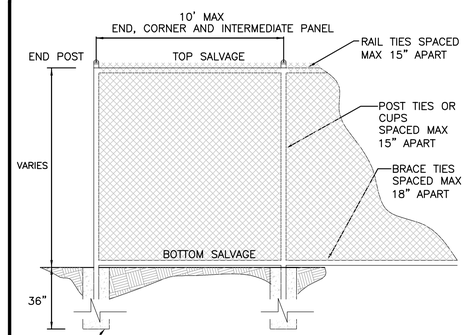

NOTES:
1. AT FENCING AGAINST WALLS, ALL POSTS TO BE SET USING "SLEEVE-IT" SEE DETAIL FOR FENCE POST AT MODULAR BLOCK WALL.
2. ALL FENCE MATERIALS TO BE BLACK VINYL COATED.

BLACK VINYL COATED CHAIN LINK FENCE (5)
NOT TO SCALE

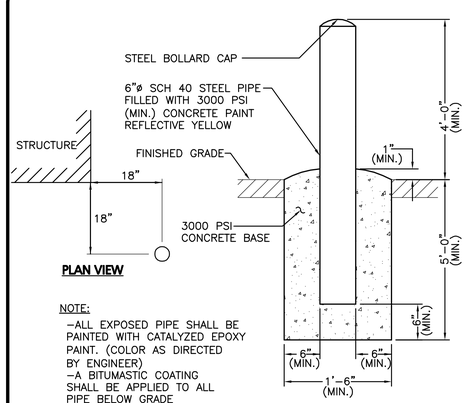

NOTE:
–ALL EXPOSED PIPE SHALL BE PAINTED WITH CATALYZED EPOXY PAINT. (COLOR AS DIRECTED BY ENGINEER)
–A BITUMASTIC COATING SHALL BE APPLIED TO ALL PIPE BELOW GRADE

FIXED BOLLARD (6)
NOT TO SCALE

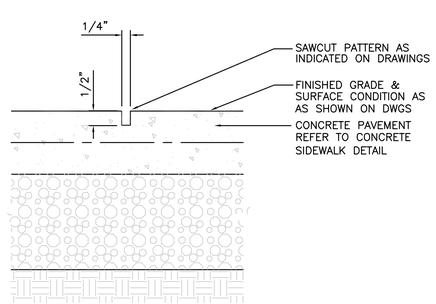

TYPICAL CONCRETE SAWCUT JOINT CONTROL (7)
NOT TO SCALE

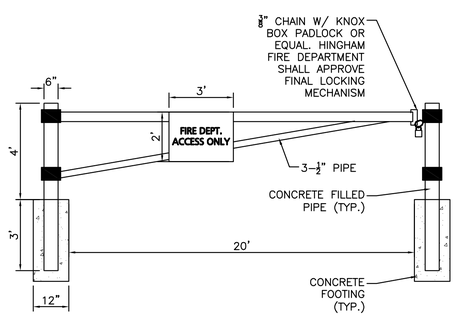

EMERGENCY FIRE ACCESS GATE (8)
NOT TO SCALE

NOTE:
TACK COAT – PROVIDE EMULSIFIED ASPHALT WHICH CONFORMS TO THE REQUIREMENTS OF THE STATE SPECIFICATIONS, DILUTED WITH ONE PART WATER TO ONE ONE PART ASPHALT FOLLOWING AASHTO M140/ASTM D997, OR AASHTO M208/ASTM D2397, SS-1H, CSS-1, OR CSS-1H.

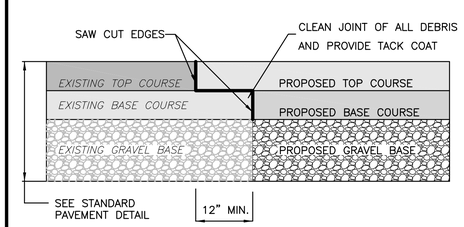

PAVEMENT KEY CUT DETAIL (9)
NOT TO SCALE

N:\PROJECTS\2118-02\CIVIL\DRAWINGS\CURRENT\C-2118-02 – DETAILS.DWG

TOWN OF HINGHAM LIST OF WAIVERS:

SECTION III–A–1.5 – SCHEDULE OF USES
- WAIVER OF THE PROHIBITION OF MULTI–FAMILY DWELLINGS IN THE OFFICE PARK DISTRICT.

SECTION IV–A – SCHEDULE OF DIMENSIONAL REQUIREMENTS
- WAIVER TO ALLOW FOR A MAXIMUM BUILDING HEIGHT OF 35 FEET (50.33'±).
- WAIVER TO ALLOW FOR A MAXIMUM FLOOR AREA RATIO OF 0.15 (0.60).
- WAIVER TO ALLOW FOR A MINIMUM FRONT YARD SETBACK OF 100 FEET (85.5 FEET).

SECTION IV–B–5 – SPECIAL REQUIREMENTS TO SCHEDULE OF DIMENSIONAL REQUIREMENTS
- WAIVER FOR A MINIMUM OF 20 FEET OF GREEN SPACE AROUND THE PERIMETER OF THE PROPERTY.

SECTION IV–B–6
- WAIVER TO ALLOW SITE PLAN REVIEW TO BE PERFORMED BY THE PLANNING BOARD.

SECTION IV–C–4 – GENERAL INTENSITY PROVISIONS
- WAIVER TO ALLOW MORE THAN ONE DWELLING UNIT PER ANY SINGLE LOT (200).

SECTION IV–E–1B – RESIDENTIAL MULTI–UNIT DEVELOPMENT
- WAIVER TO ALLOW THE NUMBER OF DWELLING UNITS PER ACRE TO BE MORE THAN 8 (18.2 UNITS/ACRE)

SECTION IV–E–1D
- WAIVER FROM PROVIDING 2000 S.F. OF LANDSCAPED SPACE PER DWELLING UNIT.

SECTION IV–E–1E
- WAIVER FROM PROVIDING 300 S.F. OF RECREATIONAL SPACE PER DWELLING UNIT.

SECTION IV–E–1F
- WAIVER FROM PROVIDING 50 FEET OF LANDSCAPED BUFFER ADJACENT TO EACH PROPERTY LINE.

SECTION IV–E–1G
- WAIVER FROM PROVIDING 300 S.F. OF RECREATIONAL SPACE PER DWELLING UNIT.

SECTION IV–E–1I
- WAIVER ALLOWING LESS THAN TWO PARKING SPACES PER DWELLING UNIT (1.55 STALLS/UNIT).

SECTION IV–E–5E
- WAIVER TO DEFER TO CURRENT DHCD LOCAL PREFERENCE CATEGORIES.

SECTION V–A–2 – OFF–STREET PARKING REQUIREMENTS
- WAIVER FROM A MINIMUM OF 2.0 PARKING STALLS PER UNIT (1.55 STALLS/UNIT).

SECTION V–A–3 – OFF–STREET PARKING REQUIREMENTS
- WAIVER FROM MINIMUM AISLE WIDTH FOR A PARKING STALL WITH NO OVERHANG

SECTION V–C–1A – EARTH REMOVAL REGULATIONS
- WAIVER ALLOWING THE REMOVAL OF SOIL, LOAM, SAND, GRAVEL, ETC. TO BE REMOVED FROM A LOT.

ARTICLE 10 – PUBLIC WAYS AND COMMON LAND
- WAIVER TO HAVE THE ZONING BOARD OF APPEALS BE THE PERMIT ISSUING AUTHORITY INSTEAD OF THE BOARD OF SELECTMEN.

ARTICLE 10–34A
- WAIVER ALLOWING SOIL, LOAM, SAND, OR GRAVEL FROM LAND IN TOWN NOT IN PUBLIC USE TO ANY LOCATIONS OUTSIDE OF THE TOWN.

ARTICLE 22–5
- WAIVER FROM THE CONSERVATION COMMISSION HAVING THE AUTHORIZATION TO DENY THE PROJECT

ARTICLE 22–8
- WAIVER REQUESTED AS A BOND IS ALREADY REQUIRED OF THE APPLICANT AS PART OF THE 40B PROCESS.

ISSUED FOR DRAINAGE REPORT
JANUARY 10, 2016

PROFESSIONAL ENGINEER FOR
ALLEN & MAJOR ASSOCIATES, INC.

REV	DATE	DESCRIPTION
3.	01/04/2017	ISSUED FOR ZBA RESUBMITTAL
2.	11/2/2016	ISSUED FOR ZBA RESUBMITTAL
1.	10/25/2016	ISSUED FOR ZBA RESUBMITTAL

APPLICANT\OWNER:
BROADSTONE BARE COVE ALLIANCE, LLC. C/O
ALLIANCE RESIDENTIAL COMPANY
184 HIGH STREET, SUITE 401
BOSTON, MA 02110

PROJECT:
BROADSTONE BARE COVE
230 BEAL STREET
HINGHAM, MA

PROJECT NO.	2118-02	DATE:	08-12-2016
SCALE:	AS NOTED	DWG. NAME:	C2118-02
DESIGNED BY:	SJL	CHECKED BY:	CMQ

PREPARED BY:

ALLEN & MAJOR ASSOCIATES, INC.
civil & structural engineering ◆ land surveying
environmental consulting ◆ landscape architecture
www.allenmajor.com
100 COMMERCE WAY
P.O. BOX 2118
WOBURN MA 01888-0118
TEL: (781) 935-6889
FAX: (781) 935-2896
WOBURN, MA ◆ LAKEVILLE, MA ◆ MANCHESTER, NH

THIS DRAWING HAS BEEN PREPARED IN ELECTRONIC FORMAT. CLIENT/CLIENT'S REPRESENTATIVE OR CONSULTANT MAY BE PROVIDED COPIES OF DRAWINGS AND SPECIFICATIONS ON MAGNETIC MEDIA FOR HIS/HER INFORMATION AND USE FOR SPECIFIC APPLICATION TO THIS PROJECT. DUE TO THE POTENTIAL THAT THE MAGNETIC INFORMATION MAY BE MODIFIED UNINTENTIONALLY OR OTHERWISE, ALLEN & MAJOR ASSOCIATES, INC. MAY REMOVE ALL INDICATION OF THE DOCUMENT'S AUTHORSHIP ON THE MAGNETIC MEDIA. PRINTED REPRESENTATIONS OF THE DRAWINGS AND SPECIFICATIONS ISSUED SHALL BE THE ONLY RECORD COPIES OF ALLEN & MAJOR ASSOCIATES, INC.'S WORK PRODUCT.

DRAWING TITLE: DETAILS

SHEET No. D-2

Copyright©2017 Allen & Major Associates, Inc.
All Rights Reserved

TYPICAL ROOF DRAIN (RD) DOWNSPOUT COLLECTOR (1)

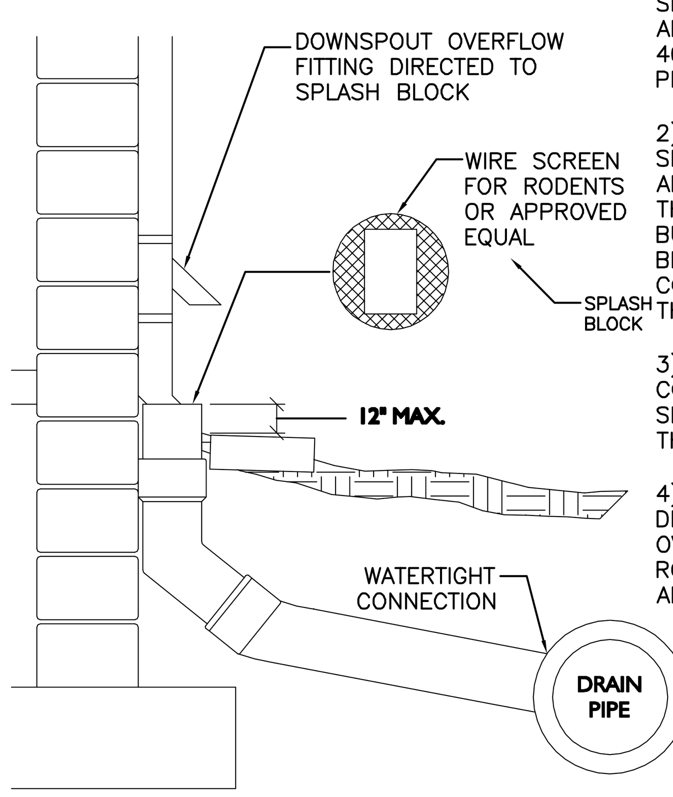

NOTES:

1) A WATERTIGHT CONNECTION SHALL BE MAINTAINED FROM ANY TRANSITION FROM SCH. 40 PVC PIPE TO ANY OTHER PIPE TYPE.

2) SITEWORK CONTRACTOR SHALL BE RESPONSIBLE FOR ALL WORK TO AND INCLUDING THE RODENT SCREEN. BUILDING CONTRACTOR SHALL BE RESPONSIBLE FOR THE CONNECTION AT THE POINT OF THE RODENT SCREEN.

3) DOWNSPOUTS SHALL BE CONNECTED IN THE MANNER SHOWN AND CONVEYED TO THE NEAREST STORM DRAIN.

4) SUBMIT SHOP DRAWINGS FOR DOWNSPOUT OVERFLOW, SPLASH BACK, RODENT SCREEN, FITTINGS AND PIPE.

TYPICAL ROOF DRAIN (RD) DOWNSPOUT COLLECTOR
NOT TO SCALE

FENCE POST AT TOP OF SEGMENTAL BLOCK RETAINING WALL (2)

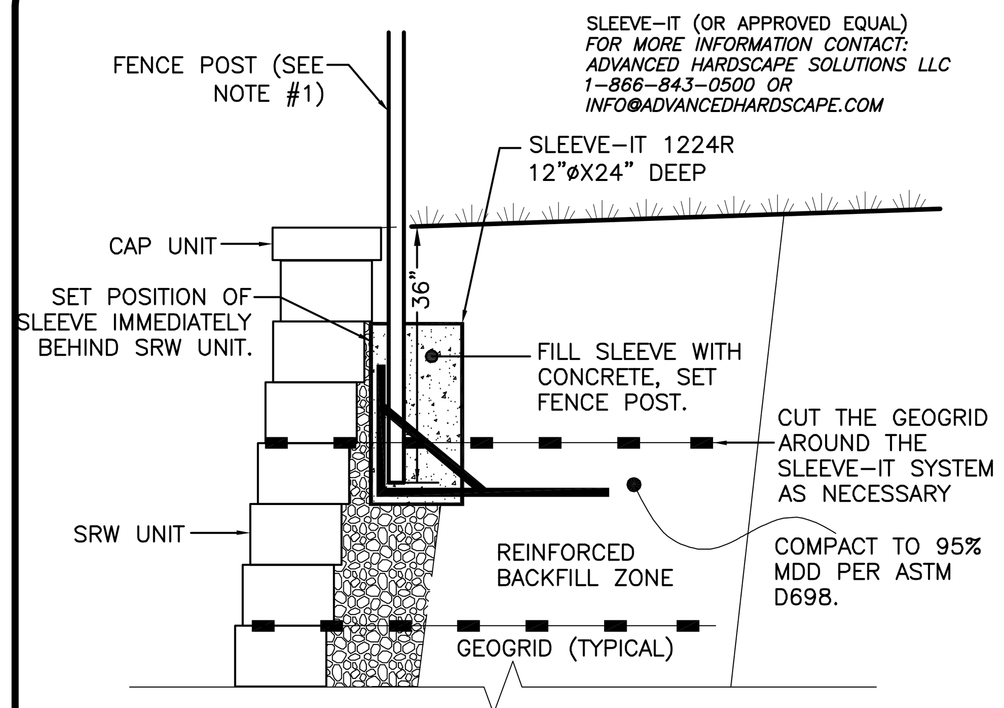

NOTES:
1. FENCING SYSTEMS APPROVED FOR USE WITH SLEEVE-IT 1224R ARE LIMITED TO THE FOLLOWING HEIGHTS:
   A. CHAIN LINK – UP TO 8-FT,
   B. PRIVACY – UP TO 6-FT (WOODEN, PVC, METAL).
   C. POST SIZE 4"X4" MAX.

FENCE POST AT TOP OF SEGMENTAL BLOCK RETAINING WALL
NOT TO SCALE

GRASS PAVER (3)

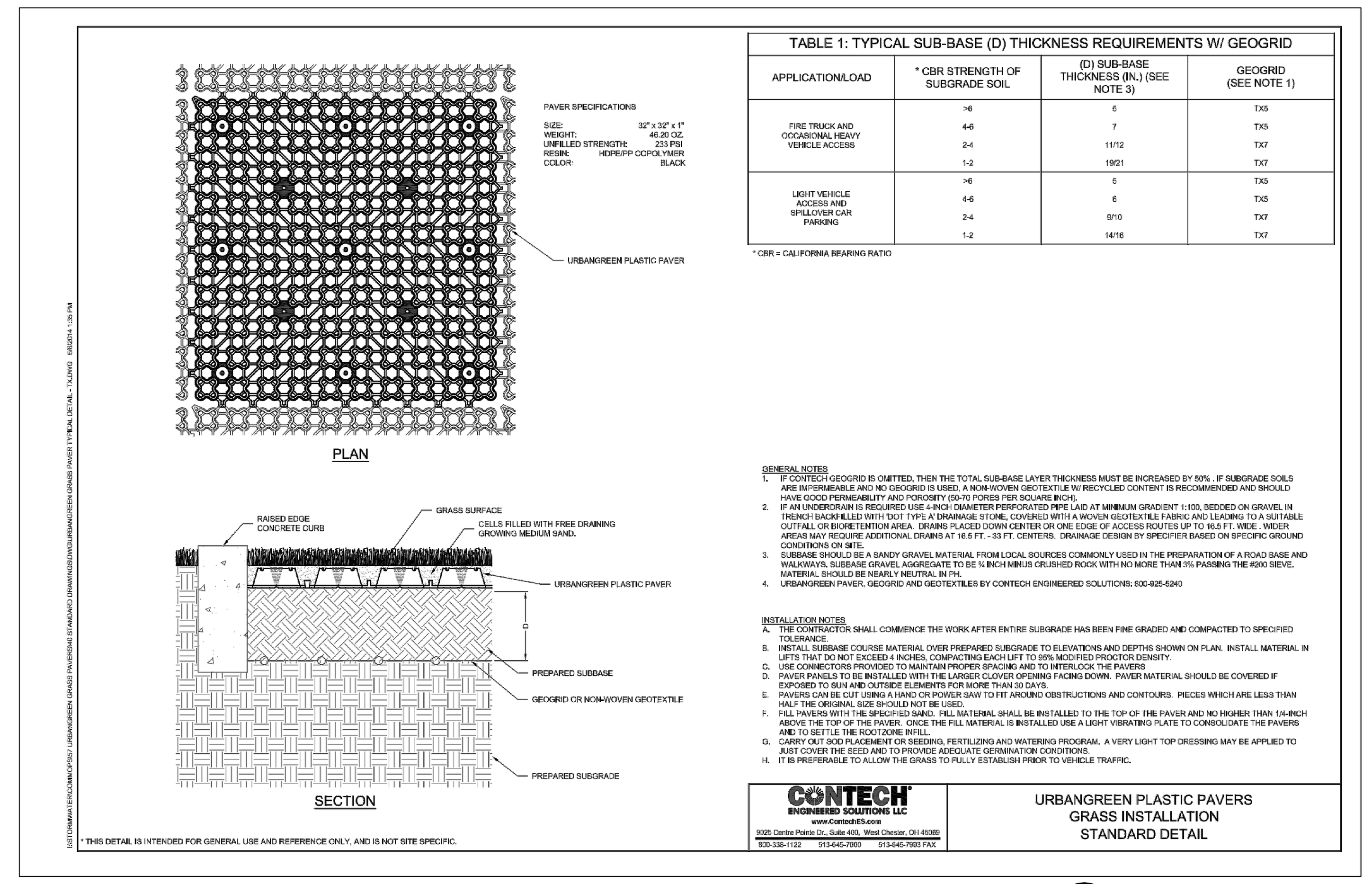

TABLE 1: TYPICAL SUB-BASE (D) THICKNESS REQUIREMENTS W/ GEOGRID

APPLICATION/LOAD	* CBR STRENGTH OF SUBGRADE SOIL	(D) SUB-BASE THICKNESS (IN.) (SEE NOTE 3)	GEOGRID (SEE NOTE 1)
FIRE TRUCK AND OCCASIONAL HEAVY VEHICLE ACCESS	>6	5	TX5
	4-6	7	TX5
	2-4	11/12	TX7
	1-2	19/21	TX7
LIGHT VEHICLE ACCESS AND SPILLOVER CAR PARKING	>6	5	TX5
	4-6	6	TX5
	2-4	9/10	TX7
	1-2	14/16	TX7

* CBR = CALIFORNIA BEARING RATIO

GRASS PAVER
NOT TO SCALE

GAS/OIL SEPARATOR (4)

PIPE MATERIAL NOTES:

1. NO-HUB CAST IRON WITH PRODUCT-APPROVED STAINLESS STEEL CLAMPS.
2. SERVICE WEIGHT CAST IRON WITH PRODUCT-APPROVED RESILIENT GASKETS OR LEAD AND OAKUM JOINTS.
3. EXTRA HEAVY CAST IRON WITH PRODUCT-APPROVED RESILIENT GASKETS OR LEAD AND OAKUM JOINTS.

MWRA INSPECTION NOTES:

1. AT LEAST 10 DAYS PRIOR TO INSTALLATION CONTRACTOR SHALL SUBMIT A "NOTIFICATION OF PROPOSED GAS/OIL SEPARATOR INSTALLATION" TO THE MWRA PER THE MASSACHUSETTS UNIFORM PLUMBING CODE AND THE MWRA'S SEWER USE REGULATIONS. FOR ADDITIONAL INFORMATION OR TO REQUEST AN INSPECTION PLEASE CONTACT THOMAS J. COFFEY, JR. (MWRA SOURCE COORDINATOR) @ (617)-305-5624.
2. PLUMBING SHALL BE INSTALLED, BUT STRUCTURE SHALL NOT BE BACKFILLED PRIOR TO MWRA INSPECTION.
3. MORTAR THE JOINTS (NO RUBBER BOOTS ALLOWED – HYDRAULIC CEMENT ONLY).
4. THE STRUCTURES SEAM MUST BE COMPLETELY VISIBLE AROUND THE ENTIRE STRUCTURE FOR INSPECTION. ADDITIONALLY THE AREA ONE FOOT BELOW THE OUTLET PIPE MUST ALSO BE VISIBLE. FOR INSPECTION.
5. OUTLET LINE SHALL BE PLUGGED (ON THE OUTSIDE) WHERE IT CAN BE REMOVED ONCE IT IS CONFIRMED THAT THE STRUCTURE HAS NO LEAKS.
6. THE CONTRACTOR SHALL FILL THE STRUCTURE WITH WATER AND CONFIRM THAT THE THERE ARE NO LEAKS PRIOR TO SCHEDULING THE MWRA INSPECTION. THE CONTRACTOR SHOULD NOTE THAT THE MWRA INSPECTOR WILL BE SPECIFICALLY LOOKING AT THE OUTLET PIPE "45 DEGREE ANGLE" AND UNDERSTANDS THAT IT IS PARTICULARLY DIFFICULT TO SEAL. SO THE CONTRACTOR SHOULD BE CAREFUL WHEN MORTARING THE JOINT. NOTE THE INSPECTOR WILL WANT TO INSPECT THE CONNECTION WITH THE TANK 1' BELOW THAT JOINT.
7. ONCE ON SITE, THE INSPECTOR WILL FIRST INSPECT THE STRUCTURE COMPLETELY FULL TO INSURE IT HAS NO LEAKS. THE INSPECTOR WILL THEN REQUIRE THAT THE OUTLET PIPE PLUG BE REMOVED TO OBSERVE THE WATER LEVEL. THE WATER LEVEL MUST BE OBSERVED AT LEAST 4" BELOW THE INLET PIPE.
8. THE CONTRACTOR MUST HAVE A 2" PUMP ON-SITE DURING THE INSPECTION TO ALLOW THE INSPECTOR TO VERIFY THE INTERIOR MEASUREMENT OF THE TANK FOR CODE COMPLIANCE.
9. THE OUTLET PIPE MUST NOT STICK INTO THE STRUCTURE CHAMBER ANY MORE THAN ILLUSTRATED.

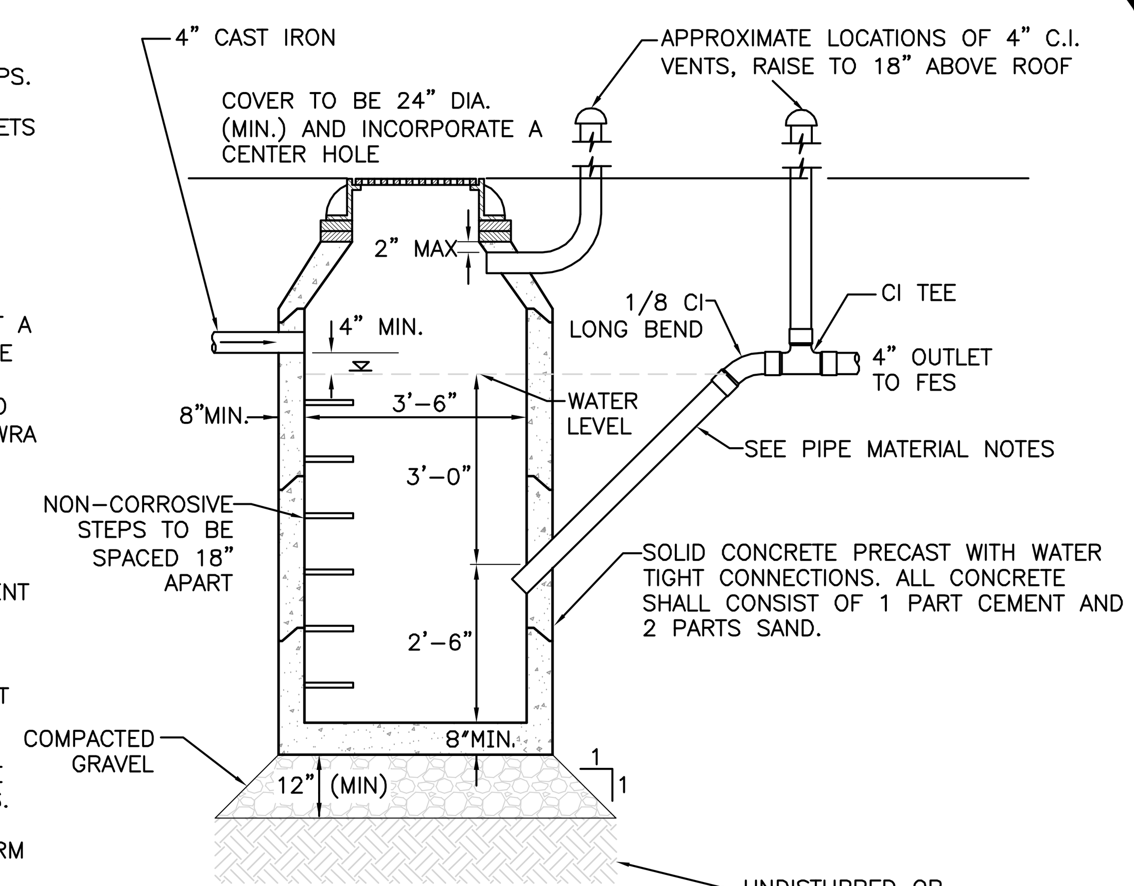

GENERAL CONSTRUCTION NOTES:

1. SEPARATOR TO BE LOCATED OUTSIDE WHERE POSSIBLE, WHEN LOCATED OUTSIDE, MANHOLE SHALL HAVE A CENTER HOLE.
2. SEPARATOR SHALL BE LOCATED AND CONSTRUCTED TO PREVENT SURFACE OR SUB-SURFACE WATER FROM ENTERING.
3. OUTLET TO BE BELOW FROST LINE.
4. SEPARATOR MUST BE FILLED WITH CLEAN WATER AND LEAK TESTED BEFORE BEING INTRODUCED INTO SERVICE.
5. OIL AND GAS TO BE REMOVED BEFORE CLEANING AND SHALL NOT BE DISCHARGED TO THE SEWER THROUGH ANY FIXTURES.
6. INLET SHALL BE SET A MINIMUM OF THREE FEET BELOW GRADE

GAS/OIL SEPARATOR
NOT TO SCALE

WOOD BEAM GUARD RAIL (5)

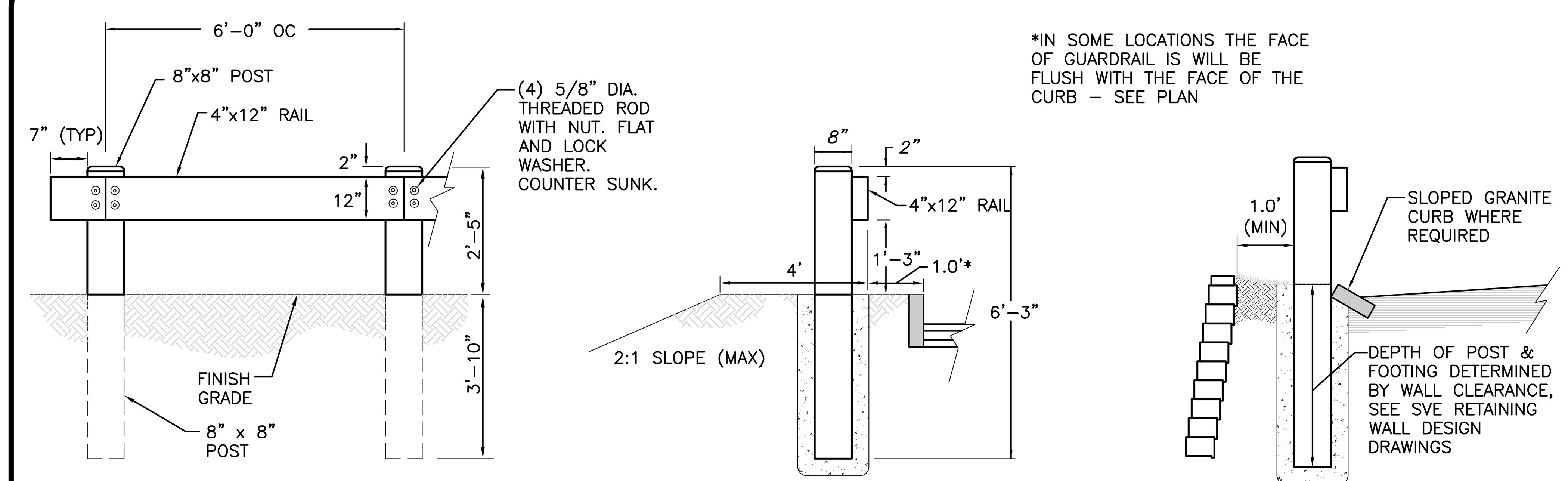

NOTES:
1. ALL TIMBER STOCK TO BE PRESSURE TREATED.
2. ALL HARDWARE TO BE GALVANIZED STEEL.

WOOD BEAM GUARD RAIL
NOT TO SCALE

CONCRETE SIDEWALK JOINTS (6)

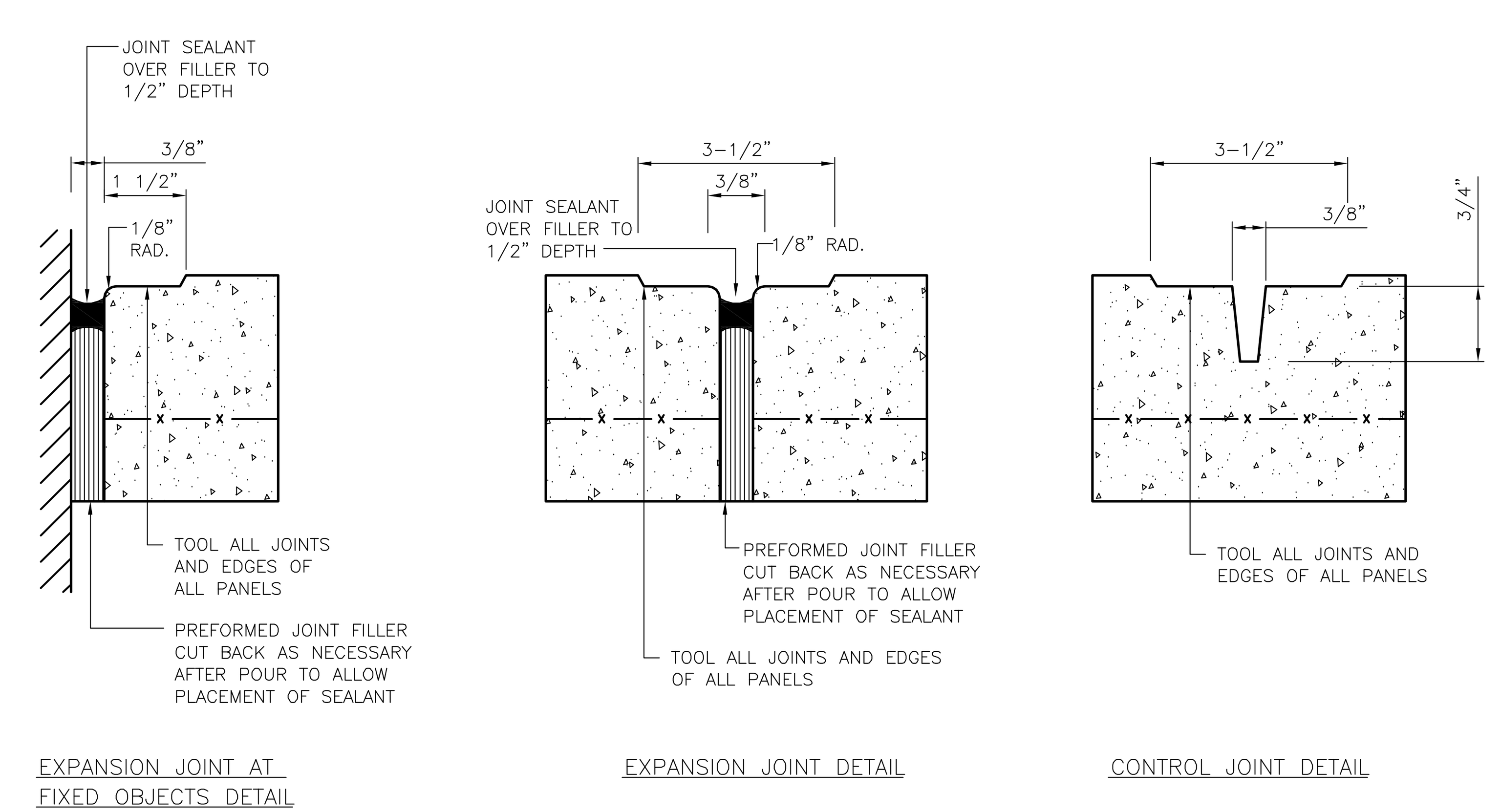

NOTES:
1. PROVIDE EXPANSION JOINTS AT MIN. 15' O.C. MIN.
2. PROVIDE CONTROL JOINTS AT 5' O.C. UNLESS SHOWN OTHERWISE.
3. PROVIDE BROOM FINISH IN DIRECTION PERPENDICULAR TO DIRECTION OF TRAVEL.
4. CEMENT CONCRETE SHALL BE 4,500 PSI AIR ENTRAINED.
5. REFER TO LANDSCAPING PLANS FOR ADDITIONAL JOINTS.
6. JOINT FILLERS SHALL BE RESILIENT PREMOLDED BITUMINOUS IMPREGNATED FIBERBOARD. SUBMIT SHOP DRAWINGS.
7. JOINT SEALANTS SHALL BE NON- PRIMING POURABLE SELF-LEVELING TYPE. SUBMIT SHOP DRAWINGS.
8. ALL CURBS TO HAVE MAXIMUM 100 FEET WITH DOWELS AND CONTROL JOINTS AT MAXIMUM 15 FEET

CONCRETE SIDEWALK JOINTS
NOT TO SCALE

N:\PROJECTS\2118-02\CIVIL\DRAWINGS\CURRENT\C-2118-02 – DETAILS.DWG

TOWN OF HINGHAM LIST OF WAIVERS:

SECTION III-A-1.5 – SCHEDULE OF USES
- WAIVER OF THE PROHIBITION OF MULTI-FAMILY DWELLINGS IN THE OFFICE PARK DISTRICT.

SECTION IV-A – SCHEDULE OF DIMENSIONAL REQUIREMENTS
- WAIVER TO ALLOW FOR A MAXIMUM BUILDING HEIGHT OF 35 FEET (50.33'±).
- WAIVER TO ALLOW FOR A MAXIMUM FLOOR AREA RATIO OF 0.15 (0.60).
- WAIVER TO ALLOW FOR A MINIMUM FRONT YARD SETBACK OF 100 FEET (85.5 FEET).

SECTION IV-B-5 – SPECIAL REQUIREMENTS TO SCHEDULE OF DIMENSIONAL REQUIREMENTS
- WAIVER FOR A MINIMUM OF 20 FEET OF GREEN SPACE AROUND THE PERIMETER OF THE PROPERTY.

SECTION IV-B-6
- WAIVER TO ALLOW SITE PLAN REVIEW TO BE PERFORMED BY THE PLANNING BOARD.

SECTION IV-C-4 – GENERAL INTENSITY PROVISIONS
- WAIVER TO ALLOW MORE THAN ONE DWELLING UNIT PER ANY SINGLE LOT (200).

SECTION IV-E-1B – RESIDENTIAL MULTI-UNIT DEVELOPMENT
- WAIVER TO ALLOW THE NUMBER OF DWELLING UNITS PER ACRE TO BE MORE THAN 8 (18.2 UNITS/ACRE)

SECTION IV-E-1D
- WAIVER FROM PROVIDING 2000 S.F. OF LANDSCAPED SPACE PER DWELLING UNIT.

SECTION IV-E-1E
- WAIVER FROM PROVIDING 300 S.F. OF RECREATIONAL SPACE PER DWELLING UNIT.

SECTION IV-E-1F
- WAIVER FROM PROVIDING 50 FEET OF LANDSCAPED BUFFER ADJACENT TO EACH PROPERTY LINE.

SECTION IV-E-1G
- WAIVER FROM PROVIDING 300 S.F. OF RECREATIONAL SPACE PER DWELLING UNIT.

SECTION IV-E-1I
- WAIVER ALLOWING LESS THAN TWO PARKING SPACES PER DWELLING UNIT (1.55 STALLS/UNIT).

SECTION IV-E-5E
- WAIVER TO DEFER TO CURRENT DHCD LOCAL PREFERENCE CATEGORIES.

SECTION V-A-2 – OFF-STREET PARKING REQUIREMENTS
- WAIVER FROM A MINIMUM OF 2.0 PARKING STALLS PER UNIT (1.55 STALLS/UNIT).

SECTION V-A-3 – OFF-STREET PARKING REQUIREMENTS
- WAIVER FROM MINIMUM AISLE WIDTH FOR A PARKING STALL WITH NO OVERHANG

SECTION V-C-1A – EARTH REMOVAL REGULATIONS
- WAIVER ALLOWING THE REMOVAL OF SOIL, LOAM, SAND, GRAVEL, ETC. TO BE REMOVED FROM A LOT.

ARTICLE 10 – PUBLIC WAYS AND COMMON LAND
- WAIVER TO HAVE THE ZONING BOARD OF APPEALS BE THE PERMIT ISSUING AUTHORITY INSTEAD OF THE BOARD OF SELECTMEN.

ARTICLE 10-34A
- WAIVER ALLOWING SOIL, LOAM, SAND, OR GRAVEL FROM LAND IN TOWN NOT IN PUBLIC USE TO ANY LOCATIONS OUTSIDE OF THE TOWN.

ARTICLE 22-5
- WAIVER FROM THE CONSERVATION COMMISSION HAVING THE AUTHORIZATION TO DENY THE PROJECT

ARTICLE 22-8
- WAIVER REQUESTED AS A BOND IS ALREADY REQUIRED OF THE APPLICANT AS PART OF THE 40B PROCESS.

****

ISSUED FOR DRAINAGE REPORT
JANUARY 10, 2016

PROFESSIONAL ENGINEER FOR ALLEN & MAJOR ASSOCIATES, INC.

REV	DATE	DESCRIPTION
3.	01/04/2017	ISSUED FOR ZBA RESUBMITTAL
2.	11/2/2016	ISSUED FOR ZBA RESUBMITTAL
1.	10/25/2016	ISSUED FOR ZBA RESUBMITTAL

APPLICANT\OWNER:
BROADSTONE BARE COVE ALLIANCE, LLC. C/O
ALLIANCE RESIDENTIAL COMPANY
184 HIGH STREET, SUITE 401
BOSTON, MA 02110

PROJECT:
BROADSTONE BARE COVE
230 BEAL STREET
HINGHAM, MA

PROJECT NO.	2118-02	DATE:	08-12-2016
SCALE:	AS NOTED	DWG. NAME:	C2118-02
DESIGNED BY:	SJL	CHECKED BY:	CMQ

PREPARED BY:

ALLEN & MAJOR ASSOCIATES, INC.
civil & structural engineering ◆ land surveying
environmental consulting ◆ landscape architecture
www.allenmajor.com
100 COMMERCE WAY
P.O. BOX 2118
WOBURN MA 01888-0118
TEL: (781) 935-6889
FAX: (781) 935-2896
WOBURN, MA ◆ LAKEVILLE, MA ◆ MANCHESTER, NH

THIS DRAWING HAS BEEN PREPARED IN ELECTRONIC FORMAT. CLIENT/CLIENT'S REPRESENTATIVE OR CONSULTANT MAY BE PROVIDED COPIES OF DRAWINGS AND SPECIFICATIONS ON MAGNETIC MEDIA FOR HIS/HER INFORMATION AND USE FOR SPECIFIC APPLICATION TO THIS PROJECT. DUE TO THE POTENTIAL THAT THE MAGNETIC INFORMATION MAY BE MODIFIED UNINTENTIONALLY OR OTHERWISE, ALLEN & MAJOR ASSOCIATES, INC. MAY REMOVE ALL INDICATION OF THE DOCUMENT'S AUTHORSHIP ON THE MAGNETIC MEDIA. PRINTED REPRESENTATIONS OF THE DRAWINGS AND SPECIFICATIONS ISSUED SHALL BE THE ONLY RECORD COPIES OF ALLEN & MAJOR ASSOCIATES, INC.'S WORK PRODUCT.

DRAWING TITLE:	SHEET No.
DETAILS	D-3

Copyright©2017 Allen & Major Associates, Inc.
All Rights Reserved

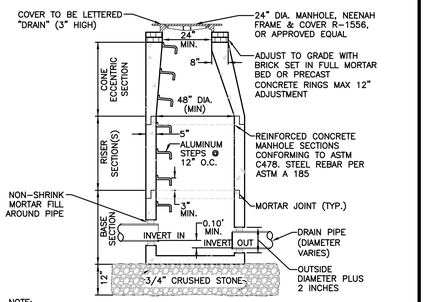

NOTE:
1. THE MANHOLE, INCLUDING ALL COMPONENT PARTS, SHALL HAVE ADEQUATE SPACE AND STRENGTH QUALITIES CONSIDERED NECESSARY FOR THE INTENDED SERVICE. SPACE REQUIREMENT AND CONFIGURATIONS SHALL BE AS SHOWN ON THE DRAWING. THE COMPLETE STRUCTURE SHALL BE OF SUCH MATERIAL AND QUALITY AS TO WITHSTAND (H-20 LOADING) WITHOUT FAILURE. VERTICAL FOOT OF MANHOLE.
2. ALL PIPE CONNECTIONS TO MANHOLES REQUIRE RUBBER BOOTS.

PRECAST DRAIN MANHOLE (1)
NOT TO SCALE

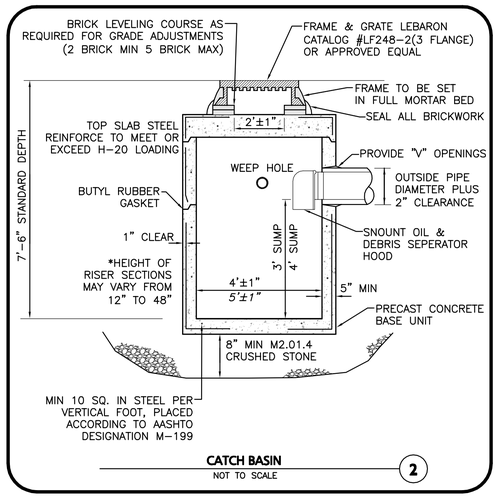

CATCH BASIN (2)
NOT TO SCALE

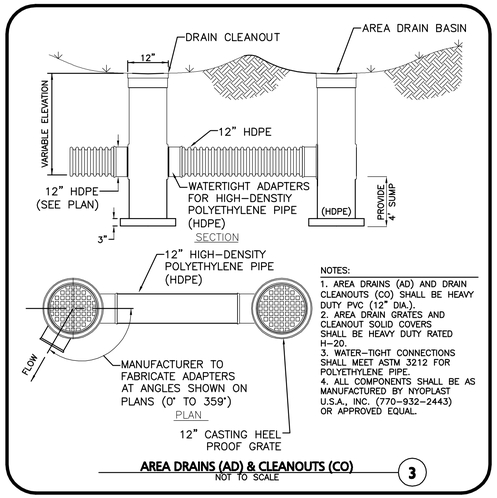

NOTES:
1. AREA DRAINS (AD) AND DRAIN CLEANOUTS (CO) SHALL BE HEAVY DUTY PVC (12" DIA.).
2. AREA DRAIN GRATES AND CLEANOUT SOLID COVERS SHALL BE HEAVY DUTY RATED H-20.
3. WATER-TIGHT CONNECTIONS SHALL MEET ASTM 3212 FOR POLYETHYLENE PIPE.
4. ALL COMPONENTS SHALL BE AS MANUFACTURED BY NYOPLAST U.S.A., INC. (770-932-2443) OR APPROVED EQUAL.

AREA DRAINS (AD) & CLEANOUTS (CO) (3)
NOT TO SCALE

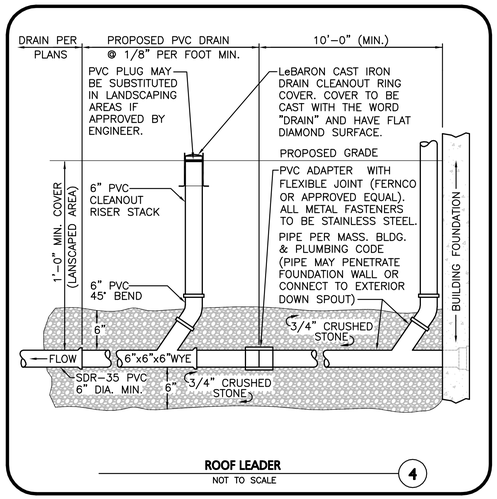

ROOF LEADER (4)
NOT TO SCALE

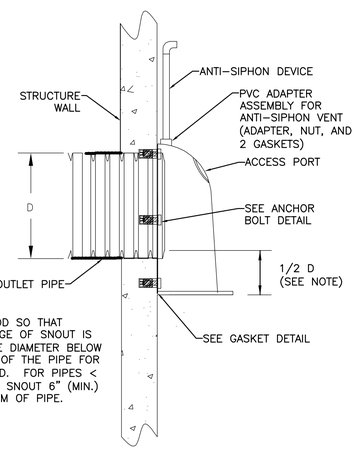

NOTE:
POSITION HOOD SO THAT BOTTOM FLANGE OF SNOUT IS 1/2 THE PIPE DIAMETER BELOW THE BOTTOM OF THE PIPE FOR PIPES >12" ID. FOR PIPES < 10" ID PLACE SNOUT 6" (MIN.) BELOW BOTTOM OF PIPE.

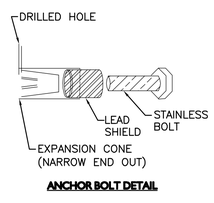

ANCHOR BOLT DETAIL

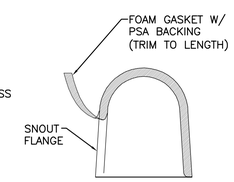

GASKET DETAIL

SNOUT OIL & DEBRIS STOP (5)
NOT TO SCALE

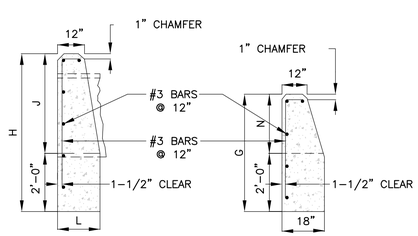

SECT. B-B SECT. A-A

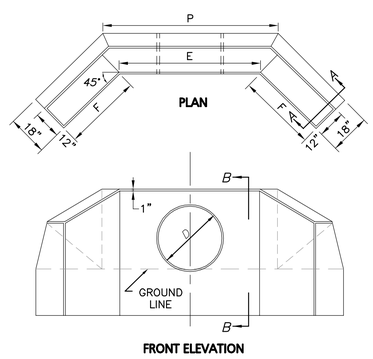

1-1/2:1 AND 2:1 SLOPE								1-1/2:1 SLOPE			2:1 SLOPE		
D	E	G	H	J	L	N	P	F	CU YDS.	LBS.	F	CU YDS.	LBS.
30"	4'-0"	4'-0"	5'-6"	3'-6"	1'-6"	2'-0"	5'-3"	3'-0"	2.60	45	4'-3"	3.16	54
36"	4'-6"	4'-3"	6'-0"	4'-0"	1'-8"	2'-3"	5'-11"	3'-6"	3.35	54	5'-0"	4.15	64
42"	5'-0"	4'-6"	6'-6"	4'-6"	1'-10"	2'-6"	6'-6"	4'-0"	4.20	59	5'-9"	5.25	70
48"	5'-6"	4'-9"	7'-0"	5'-0"	2'-0"	2'-9"	7'-2"	4'-6"	5.19	65	6'-6"	6.50	83

NOTE: ALL CONCRETE DIMENSIONS SHOWN ARE MINIMUM.

CONCRETE HEADWALL (6)
NOT TO SCALE

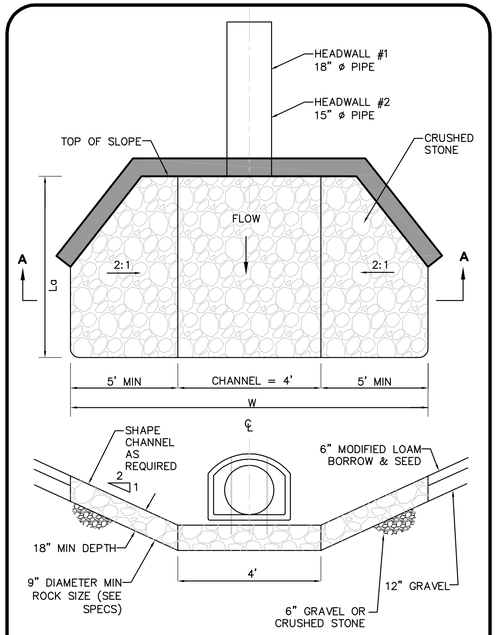

RIPRAP SIZING CHART

OUTLET	La	W	D50
HW#1	19.1'	23.6'	0.50
FES#1	11.3'	15.0'	0.50
FES#2	8.4'	11.4'	0.50
FES#3	16.0'	19.8'	0.50
FES#4	16.5'	21.0'	0.50

RIP RAP SHALL EXTEND FROM THE HEADWALL TO THE BOTTOM OF THE PROPOSED WETLAND AREA OR FURTHER AS SHOWN ON THE GRADING & DRAINAGE PLAN.

RIPRAP APRON DIMENSIONS (7)
NOT TO SCALE

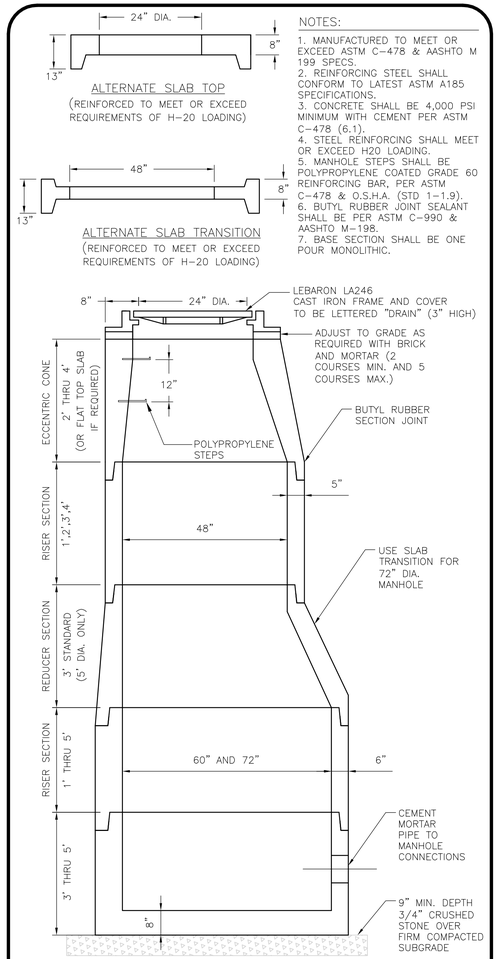

NOTES:
1. MANUFACTURED TO MEET OR EXCEED ASTM C-478 & AASHTO M 199 SPECS.
2. REINFORCING STEEL SHALL CONFORM TO LATEST ASTM A185 SPECIFICATIONS.
3. CONCRETE SHALL BE 4,000 PSI MINIMUM WITH CEMENT PER ASTM C-478 (6.1).
4. STEEL REINFORCING SHALL MEET OR EXCEED H20 LOADING.
5. MANHOLE STEPS SHALL BE POLYPROPYLENE COATED GRADE 60 REINFORCING BAR, PER ASTM C-478 & O.S.H.A. (STD 1-1.9).
6. BUTYL RUBBER JOINT SEALANT SHALL BE PER ASTM C-990 & AASHTO M-198.
7. BASE SECTION SHALL BE ONE POUR MONOLITHIC.

60" AND 72" DIAMETER PRECAST CONCRETE DRAIN MANHOLE (DMH) FOR PIPE DIAMETERS 24" AND GREATER
(OR APPROVED EQUAL) (8)

N:\PROJECTS\2118-02\CIVIL\DRAWINGS\CURRENT\C-2118-02 - DETAILS.DWG

TOWN OF HINGHAM LIST OF WAIVERS:

SECTION III-A-1.5 - SCHEDULE OF USES
- WAIVER OF THE PROHIBITION OF MULTI-FAMILY DWELLINGS IN THE OFFICE PARK DISTRICT.

SECTION IV-A - SCHEDULE OF DIMENSIONAL REQUIREMENTS
- WAIVER TO ALLOW FOR A MAXIMUM BUILDING HEIGHT OF 35 FEET (50.33'±).
- WAIVER TO ALLOW FOR A MAXIMUM FLOOR AREA RATIO OF 0.15 (0.60).
- WAIVER TO ALLOW FOR A MINIMUM FRONT YARD SETBACK OF 100 FEET (85.5 FEET).

SECTION IV-B-5 - SPECIAL REQUIREMENTS TO SCHEDULE OF DIMENSIONAL REQUIREMENTS
- WAIVER FOR A MINIMUM OF 20 FEET OF GREEN SPACE AROUND THE PERIMETER OF THE PROPERTY.

SECTION IV-B-6
- WAIVER TO ALLOW SITE PLAN REVIEW TO BE PERFORMED BY THE PLANNING BOARD.

SECTION IV-C-4 - GENERAL INTENSITY PROVISIONS
- WAIVER TO ALLOW MORE THAN ONE DWELLING UNIT PER ANY SINGLE LOT (200).

SECTION IV-E-1B - RESIDENTIAL MULTI-UNIT DEVELOPMENT
- WAIVER TO ALLOW THE NUMBER OF DWELLING UNITS PER ACRE TO BE MORE THAN 8 (18.2 UNITS/ACRE)

SECTION IV-E-1D
- WAIVER FROM PROVIDING 2000 S.F. OF LANDSCAPED SPACE PER DWELLING UNIT.

SECTION IV-E-1E
- WAIVER FROM PROVIDING 300 S.F. OF RECREATIONAL SPACE PER DWELLING UNIT.

SECTION IV-E-1F
- WAIVER FROM PROVIDING 50 FEET OF LANDSCAPED BUFFER ADJACENT TO EACH PROPERTY LINE.

SECTION IV-E-1G
- WAIVER FROM PROVIDING 300 S.F. OF RECREATIONAL SPACE PER DWELLING UNIT.

SECTION IV-E-1I
- WAIVER ALLOWING LESS THAN TWO PARKING SPACES PER DWELLING UNIT (1.55 STALLS/UNIT).

SECTION IV-E-5E
- WAIVER TO DEFER TO CURRENT DHCD LOCAL PREFERENCE CATEGORIES.

SECTION V-A-2 - OFF-STREET PARKING REQUIREMENTS
- WAIVER FROM A MINIMUM OF 2.0 PARKING STALLS PER UNIT (1.55 STALLS/UNIT).

SECTION V-A-3 - OFF-STREET PARKING REQUIREMENTS
- WAIVER FROM MINIMUM AISLE WIDTH FOR A PARKING STALL WITH NO OVERHANG

SECTION V-C-1A - EARTH REMOVAL REGULATIONS
- WAIVER ALLOWING THE REMOVAL OF SOIL, LOAM, SAND, GRAVEL, ETC. TO BE REMOVED FROM A LOT.

ARTICLE 10 - PUBLIC WAYS AND COMMON LAND
- WAIVER TO HAVE THE ZONING BOARD OF APPEALS BE THE PERMIT ISSUING AUTHORITY INSTEAD OF THE BOARD OF SELECTMEN.

ARTICLE 10-34A
- WAIVER ALLOWING SOIL, LOAM, SAND, OR GRAVEL FROM LAND IN TOWN NOT IN PUBLIC USE TO ANY LOCATIONS OUTSIDE OF THE TOWN.

ARTICLE 22-5
- WAIVER FROM THE CONSERVATION COMMISSION HAVING THE AUTHORIZATION TO DENY THE PROJECT

ARTICLE 22-8
- WAIVER REQUESTED AS A BOND IS ALREADY REQUIRED OF THE APPLICANT AS PART OF THE 40B PROCESS.

ISSUED FOR DRAINAGE REPORT
JANUARY 10, 2016

PROFESSIONAL ENGINEER FOR
ALLEN & MAJOR ASSOCIATES, INC.

REV	DATE	DESCRIPTION
3.	01/04/2017	ISSUED FOR ZBA RESUBMITTAL
2.	11/2/2016	ISSUED FOR ZBA RESUBMITTAL
1.	10/25/2016	ISSUED FOR ZBA RESUBMITTAL

APPLICANT\OWNER:
BROADSTONE BARE COVE ALLIANCE, LLC. C/O
ALLIANCE RESIDENTIAL COMPANY
184 HIGH STREET, SUITE 401
BOSTON, MA 02110

PROJECT:
BROADSTONE BARE COVE
230 BEAL STREET
HINGHAM, MA

PROJECT NO.	2118-02	DATE:	08-12-2016
SCALE:	AS NOTED	DWG. NAME:	C2118-02
DESIGNED BY:	SJL	CHECKED BY:	CMQ

PREPARED BY:

ALLEN & MAJOR ASSOCIATES, INC.
civil & structural engineering ◆ land surveying
environmental consulting ◆ landscape architecture
www.allenmajor.com
100 COMMERCE WAY
P.O. BOX 2118
WOBURN MA 01888-0118
TEL: (781) 935-6889
FAX: (781) 935-2896
WOBURN, MA ◆ LAKEVILLE, MA ◆ MANCHESTER, NH

THIS DRAWING HAS BEEN PREPARED IN ELECTRONIC FORMAT. CLIENT/CLIENT'S REPRESENTATIVE OR CONSULTANT MAY BE PROVIDED COPIES OF DRAWINGS AND SPECIFICATIONS ON MAGNETIC MEDIA FOR HIS/HER INFORMATION AND USE FOR SPECIFIC APPLICATION TO THIS PROJECT. DUE TO THE POTENTIAL THAT THE MAGNETIC INFORMATION MAY BE MODIFIED UNINTENTIONALLY OR OTHERWISE, ALLEN & MAJOR ASSOCIATES, INC. MAY REMOVE ALL INDICATION OF THE DOCUMENT'S AUTHORSHIP ON THE MAGNETIC MEDIA. PRINTED REPRESENTATIONS OF THE DRAWINGS AND SPECIFICATIONS ISSUED SHALL BE THE ONLY RECORD COPIES OF ALLEN & MAJOR ASSOCIATES, INC.'S WORK PRODUCT.

DRAWING TITLE: DETAILS

SHEET No. D-4

Copyright©2017 Allen & Major Associates, Inc.
All Rights Reserved

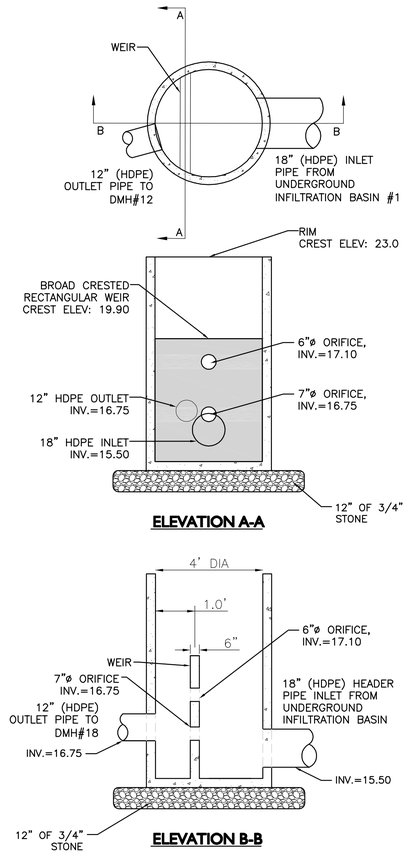

NOTES:

1. CONCRETE: 4,000 PSI MINIMUM AFTER 28 DAYS.
2. ALL REINFORCEMENT PER ASTM C1227-93.
3. TONGUE & GROOVE JOINT SEALED WITH BUTYLE RESIN OR MASTIC.
4. WALLS ARE TO BE 6" THICK & BOTTOM TO BE 8" THICK.
5. PROVIDE 4' SUMP

OUTLET CONTROL STRUCTURE #1 (1)
NOT TO SCALE

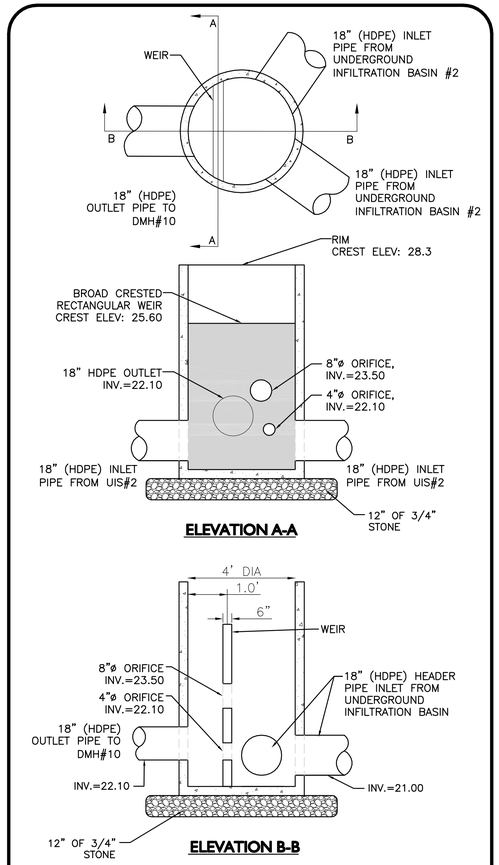

NOTES:

1. CONCRETE: 4,000 PSI MINIMUM AFTER 28 DAYS.
2. ALL REINFORCEMENT PER ASTM C1227-93.
3. TONGUE & GROOVE JOINT SEALED WITH BUTYLE RESIN OR MASTIC.
4. WALLS ARE TO BE 6" THICK & BOTTOM TO BE 8" THICK.
5. PROVIDE 4' SUMP

OUTLET CONTROL STRUCTURE #2 (2)
NOT TO SCALE

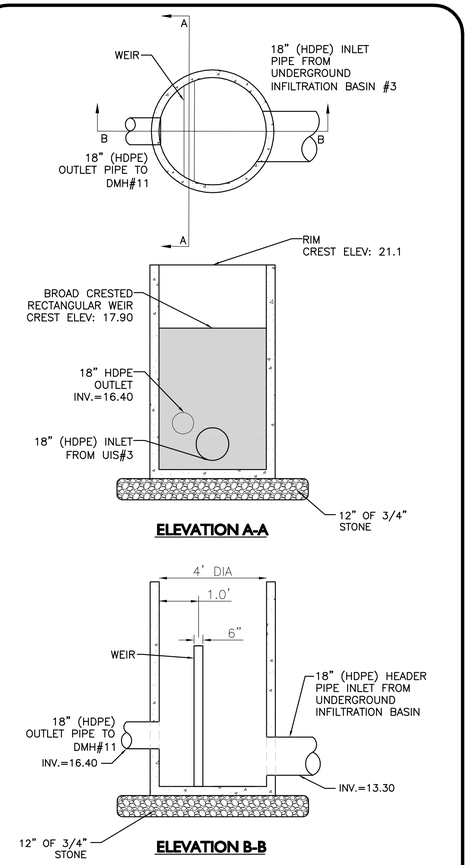

NOTES:

1. CONCRETE: 4,000 PSI MINIMUM AFTER 28 DAYS.
2. ALL REINFORCEMENT PER ASTM C1227-93.
3. TONGUE & GROOVE JOINT SEALED WITH BUTYLE RESIN OR MASTIC.
4. WALLS ARE TO BE 6" THICK & BOTTOM TO BE 8" THICK.
5. PROVIDE 4' SUMP

OUTLET CONTROL STRUCTURE #3A (3)
NOT TO SCALE

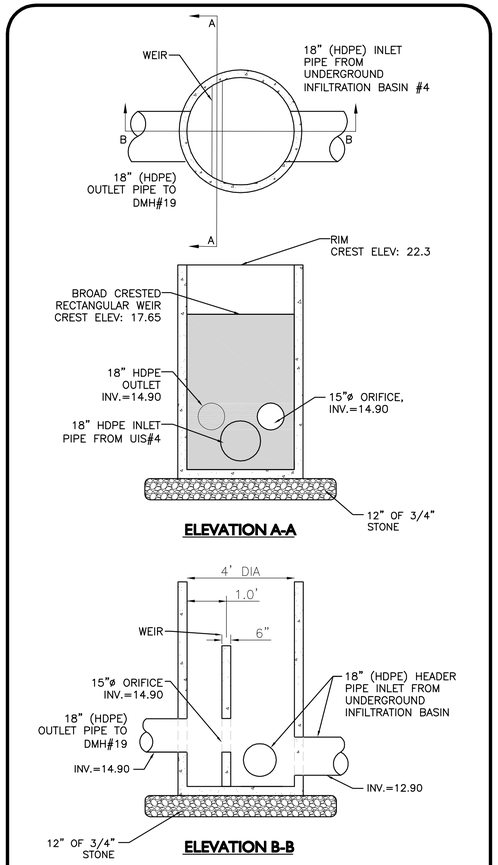

NOTES:

1. CONCRETE: 4,000 PSI MINIMUM AFTER 28 DAYS.
2. ALL REINFORCEMENT PER ASTM C1227-93.
3. TONGUE & GROOVE JOINT SEALED WITH BUTYLE RESIN OR MASTIC.
4. WALLS ARE TO BE 6" THICK & BOTTOM TO BE 8" THICK.
5. PROVIDE 4' SUMP

OUTLET CONTROL STRUCTURE #4 (4)
NOT TO SCALE

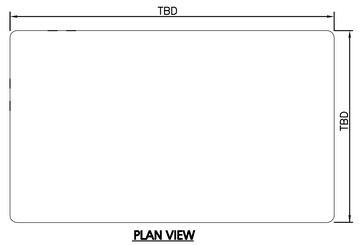

PLAN VIEW

NOTES:
1. FINAL LAYOUT OF PAD AND PENETRATIONS TO BE REVIEWED AND APPROVED BY ELECTRICAL CONTRACTOR.

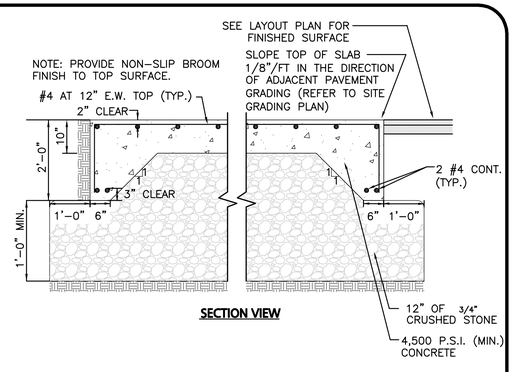

SECTION VIEW

WASTEWATER TREATMENT PLANT EMERGENCY GENERATOR PAD DETAIL (5)
NOT TO SCALE

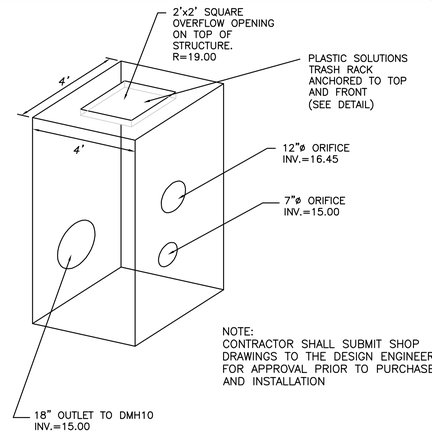

NOTE:
CONTRACTOR SHALL SUBMIT SHOP DRAWINGS TO THE DESIGN ENGINEER FOR APPROVAL PRIOR TO PURCHASE AND INSTALLATION

OUTLET CONTROL STRUCTURE #3B (6)
NOT TO SCALE

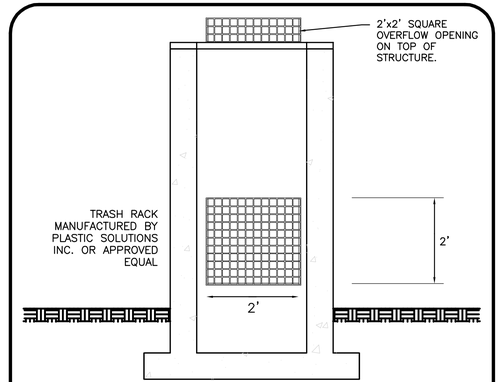

FLAT ROOF TRASH RACK FOR OCS #3 (7)
NOT TO SCALE

N:\PROJECTS\2118-02\CIVIL\DRAWINGS\CURRENT\C-2118-02 - DETAILS.DWG

TOWN OF HINGHAM LIST OF WAIVERS:

SECTION III-A-1.5 - SCHEDULE OF USES
- WAIVER OF THE PROHIBITION OF MULTI-FAMILY DWELLINGS IN THE OFFICE PARK DISTRICT.

SECTION IV-A - SCHEDULE OF DIMENSIONAL REQUIREMENTS
- WAIVER TO ALLOW FOR A MAXIMUM BUILDING HEIGHT OF 35 FEET (50.33'±).
- WAIVER TO ALLOW FOR A MAXIMUM FLOOR AREA RATIO OF 0.15 (0.60).
- WAIVER TO ALLOW FOR A MINIMUM FRONT YARD SETBACK OF 100 FEET (85.5 FEET).

SECTION IV-B-5 - SPECIAL REQUIREMENTS TO SCHEDULE OF DIMENSIONAL REQUIREMENTS
- WAIVER FOR A MINIMUM OF 20 FEET OF GREEN SPACE AROUND THE PERIMETER OF THE PROPERTY.

SECTION IV-B-6
- WAIVER TO ALLOW SITE PLAN REVIEW TO BE PERFORMED BY THE PLANNING BOARD.

SECTION IV-C-4 - GENERAL INTENSITY PROVISIONS
- WAIVER TO ALLOW MORE THAN ONE DWELLING UNIT PER ANY SINGLE LOT (200).

SECTION IV-E-1B - RESIDENTIAL MULTI-UNIT DEVELOPMENT
- WAIVER TO ALLOW THE NUMBER OF DWELLING UNITS PER ACRE TO BE MORE THAN 8 (18.2 UNITS/ACRE)

SECTION IV-E-1D
- WAIVER FROM PROVIDING 2000 S.F. OF LANDSCAPED SPACE PER DWELLING UNIT.

SECTION IV-E-1E
- WAIVER FROM PROVIDING 300 S.F. OF RECREATIONAL SPACE PER DWELLING UNIT.

SECTION IV-E-1F
- WAIVER FROM PROVIDING 50 FEET OF LANDSCAPED BUFFER ADJACENT TO EACH PROPERTY LINE.

SECTION IV-E-1G
- WAIVER FROM PROVIDING 300 S.F. OF RECREATIONAL SPACE PER DWELLING UNIT.

SECTION IV-E-1I
- WAIVER ALLOWING LESS THAN TWO PARKING SPACES PER DWELLING UNIT (1.55 STALLS/UNIT).

SECTION IV-E-5E
- WAIVER TO DEFER TO CURRENT DHCD LOCAL PREFERENCE CATEGORIES.

SECTION V-A-2 - OFF-STREET PARKING REQUIREMENTS
- WAIVER FROM A MINIMUM OF 2.0 PARKING STALLS PER UNIT (1.55 STALLS/UNIT).

SECTION V-A-3 - OFF-STREET PARKING REQUIREMENTS
- WAIVER FROM MINIMUM AISLE WIDTH FOR A PARKING STALL WITH NO OVERHANG

SECTION V-C-1A - EARTH REMOVAL REGULATIONS
- WAIVER ALLOWING THE REMOVAL OF SOIL, LOAM, SAND, GRAVEL, ETC. TO BE REMOVED FROM A LOT.

ARTICLE 10 - PUBLIC WAYS AND COMMON LAND
- WAIVER TO HAVE THE ZONING BOARD OF APPEALS BE THE PERMIT ISSUING AUTHORITY INSTEAD OF THE BOARD OF SELECTMEN.

ARTICLE 10-34A
- WAIVER ALLOWING SOIL, LOAM, SAND, OR GRAVEL FROM LAND IN TOWN NOT IN PUBLIC USE TO ANY LOCATIONS OUTSIDE OF THE TOWN.

ARTICLE 22-5
- WAIVER FROM THE CONSERVATION COMMISSION HAVING THE AUTHORIZATION TO DENY THE PROJECT

ARTICLE 22-8
- WAIVER REQUESTED AS A BOND IS ALREADY REQUIRED OF THE APPLICANT AS PART OF THE 40B PROCESS.

ISSUED FOR DRAINAGE REPORT
JANUARY 10, 2016

PROFESSIONAL ENGINEER FOR
ALLEN & MAJOR ASSOCIATES, INC.

REV	DATE	DESCRIPTION
3.	01/04/2017	ISSUED FOR ZBA RESUBMITTAL
2.	11/2/2016	ISSUED FOR ZBA RESUBMITTAL
1.	10/25/2016	ISSUED FOR ZBA RESUBMITTAL

APPLICANT\OWNER:
BROADSTONE BARE COVE ALLIANCE, LLC. C/O
ALLIANCE RESIDENTIAL COMPANY
184 HIGH STREET, SUITE 401
BOSTON, MA 02110

PROJECT:
BROADSTONE BARE COVE
230 BEAL STREET
HINGHAM, MA

PROJECT NO.	2118-02	DATE:	08-12-2016
SCALE:	AS NOTED	DWG. NAME:	C2118-02
DESIGNED BY:	SJL	CHECKED BY:	CMQ

PREPARED BY:
ALLEN & MAJOR ASSOCIATES, INC.
civil & structural engineering ◆ land surveying
environmental consulting ◆ landscape architecture
www.allenmajor.com
100 COMMERCE WAY
P.O. BOX 2118
WOBURN MA 01888-0118
TEL: (781) 935-6889
FAX: (781) 935-2896
WOBURN, MA ◆ LAKEVILLE, MA ◆ MANCHESTER, NH

THIS DRAWING HAS BEEN PREPARED IN ELECTRONIC FORMAT. CLIENT/CLIENT'S REPRESENTATIVE OR CONSULTANT MAY BE PROVIDED COPIES OF DRAWINGS AND SPECIFICATIONS ON MAGNETIC MEDIA FOR HIS/HER INFORMATION AND USE FOR SPECIFIC APPLICATION TO THIS PROJECT. DUE TO THE POTENTIAL THAT THE MAGNETIC INFORMATION MAY BE MODIFIED UNINTENTIONALLY OR OTHERWISE, ALLEN & MAJOR ASSOCIATES, INC. MAY REMOVE ALL INDICATION OF THE DOCUMENT'S AUTHORSHIP ON THE MAGNETIC MEDIA. PRINTED REPRESENTATIONS OF THE DRAWINGS AND SPECIFICATIONS ISSUED SHALL BE THE ONLY RECORD COPIES OF ALLEN & MAJOR ASSOCIATES, INC.'S WORK PRODUCT.

DRAWING TITLE: DETAILS

SHEET No. D-5

Copyright©2017 Allen & Major Associates, Inc.
All Rights Reserved

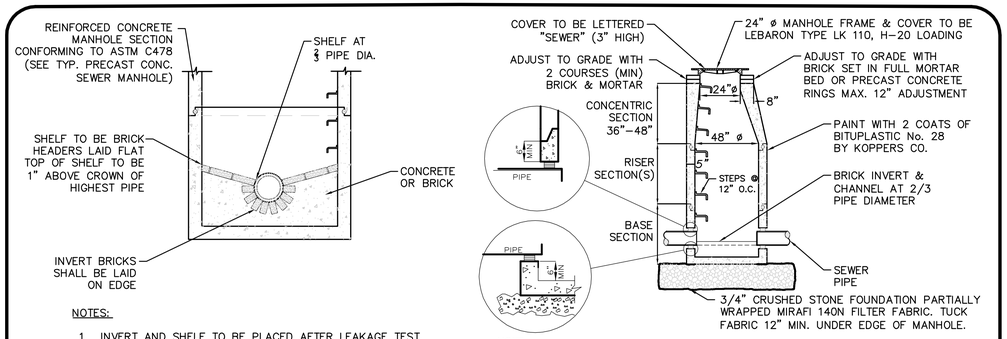

NOTES:

1. INVERT AND SHELF TO BE PLACED AFTER LEAKAGE TEST.
2. MANHOLES SHALL HAVE A BRICK PAVED SHELF AND INVERT, CONSTRUCTED TO CONFORM TO THE SIZE OF PIPE AND FLOW. AT CHANGES IN DIRECTION, THE INVERTS SHALL BE LAID OUT IN CURVES OF THE LONGEST RADIUS POSSIBLE TANGENT TO THE CETER LINE OF THE HIGHEST PIPE CROWN AND SLOPE TO DRAIN TOWARD THE FLOWING THROUGH CHANNEL. UNDERLAYMENT OF INVERT AND SHELF SHALL CONSIST OF CEMENT CONCRETE OR BRICK IN MORTAR.

NOTE:
THE MANHOLE, INCLUDING ALL COMPONENT PARTS, SHALL HAVE ADEQUATE SPACE, STRENGTH AND LEAK PROOF QUALITIES CONSIDERED NECESSARY FOR THE INTENDED SERVICE SPACE REQUIREMENT AND CONFIGURATIONS SHALL BE AS SHOWN ON THE DRAWING. MANHOLES MAY BE AN ASSEMBLY OR PRECAST SECTIONS, WITH OR WITHOUT STEEL REINFORCEMENT, WITH ADEQUATE JOINTING OR CONCRETE CAST MONOLITHICALLY IN PLACE WITH OR WITHOUT REINFORCEMENT. IN ANY APPROVED MANHOLE, THE COMPLETE STRUCTURE SHALL BE OF SUCH MATERIAL AND QUALITY AS TO WITHSTAND LOADS OF 8 TONS (H–20 LOADING) WITHOUT FAILURE AND PREVENT LEAKAGE IN EXCESS OF ONE GALLON PER DAY PER VERTICAL FOOT OF MANHOLE.

PRECAST CONCRETE SEWER MANHOLE (SMH) 1
NOT TO SCALE

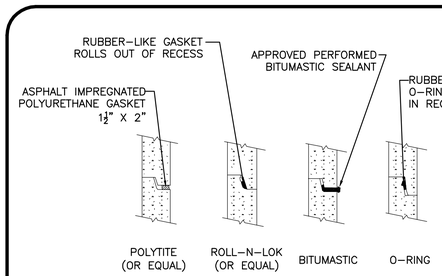

NOTES:
1. HORIZONTAL JOINTS BETWEEN SECTIONS OF PRECAST CONCRETE BARRELS SHALL BE OF A TYPE APPROVED BY THE ENGINEER, WHICH TYPE SHALL, IN GENERAL, DEPEND FOR WATER TIGHTNESS UPON AN ELASTOMERIC OR MASTIC–LIKE GASKET.
2. ALL GASKETS AND SEALANTS SHALL BE INSTALLED IN ACCORDANCE WITH MANUFACTURER'S WRITTEN INSTRUCTIONS.
3. FOR BITUMASTIC TYPE JOINTS THE AMOUNT OF SEALANT SHALL BE SUFFICIENT TO FILL AT LEAST 75% OF THE JOINT CAVITY.

SEWER MANHOLE JOINTING METHODS 2
NOT TO SCALE

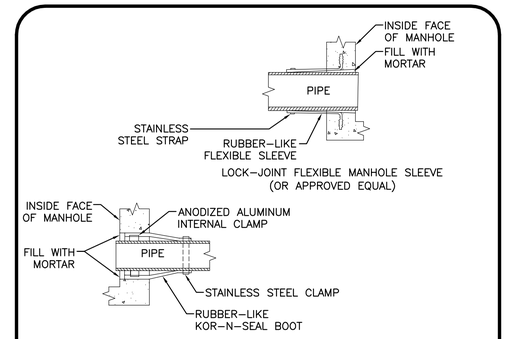

NOTES:
1. PIPE TO MANHOLE JOINTS SHALL BE ONLY AS APPROVED BY THE ENGINEER AND IN GENERAL, WILL DEPEND FOR WATER TIGHTNESS UPON ELASTOMETRIC SEALANT
2. NON–SHRINKING MORTAR SHALL ONLY BE USED WHERE SPECIFICALLY APPROVED BY THE ENGINEER.

PIPE CONNECTIONS TO SEWER MANHOLE 3
NOT TO SCALE

NOTES:
1. ALL WATER MAIN FITTINGS, BENDS, TEES, PLUGS ETC. SHALL BE RESTRAINED W/ THRUST BLOCKS EXCEPT WHERE NOTED.
2. ALL THRUST BLOCKS & COLLARS SHALL BE INSTALLED SO THAT THEY BEAR AGAINST UNDISTURBED EARTH.
3. SIZE OF CONCRETE THRUST BLOCKS SHALL BE AS NOTED BELOW.
4. MINIMUM COMPRESSIVE STRENGTH OF THRUST BLOCK CONCRETE SHALL BE 3,000 P.S.I.
5. KEEP CONCRETE CLEAR OF MECHANICAL JOINTS.
6. THE BELOW PREDICATED ON A WATER PRESSURE OF 225 PSI AND A SOIL RESISTANCE OF 2000 PSF (TILL). FOR OTHER SOILS THE VALUES IN THE ABOVE TABLE SHALL BE MULTIPLIED BY:

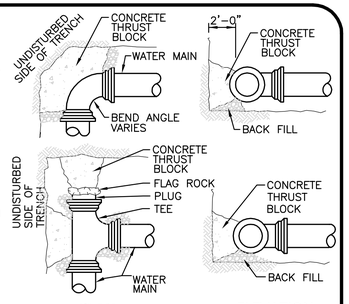

MINIMUM THRUST BLOCK BEARING AREAS				
PIPE ø	90° BEND (SQ. FT.)	45° BEND (SQ. FT.)	22.5° BEND (SQ. FT.)	TEES, PLUGS, CAPS & HYD. (SQ.FT.)
6"	5	3	3	4
8"	9	6	3	9
10"	13	7	4	12
12"	20	10	5	16

THRUST BLOCK DETAILS 4
NOT TO SCALE

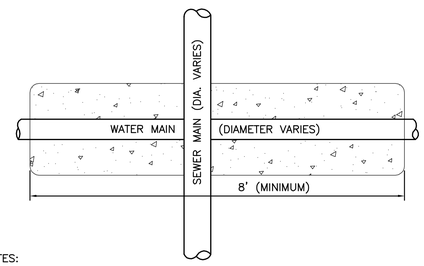

NOTES:

WHENEVER CONDITIONS PREVENT A LATERAL SEPARATION OF 10 FEET BETWEEN A SEWER MAIN AND A WATER MAIN:

1. THE WATER MAIN SHALL BE LAID IN A SEPARATE TRENCH AND THE DIFFERENCE IN ELEVATION BETWEEN THE WATER MAIN AND THE SEWER MAIN SHALL BE AT LEAST 18 INCHES.
2. THE PIPE CROSSING SHALL OCCUR AS CLOSE TO 90' AS PRACTICABLE.
3. THE PIPE JOINTS SHALL BE STAGGERED TO PROVIDE THE MAXIMUM SEPARATION FROM THE POINT OF CROSSING.
4. THE CROSSING SHALL BE ENCASED IN CONCRETE FOR THE ENTIRE WIDTH OF THE TRENCH AND FOR A DISTANCE OF 8 LINEAR FEET CENTERED ON THE CROSSING.

SEWER / WATER CROSSING DETAIL 5
NOT TO SCALE

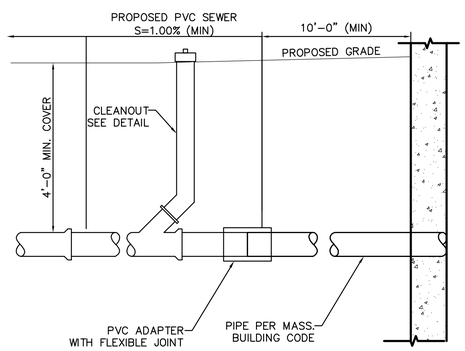

BUILDING SEWER SERVICE 6
NOT TO SCALE

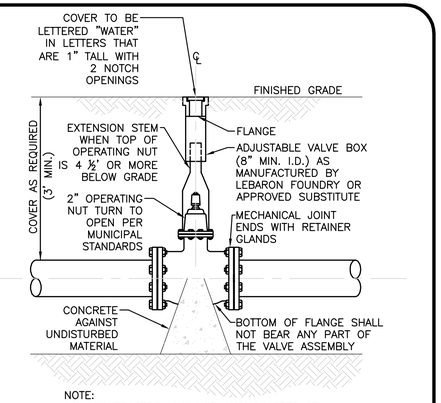

NOTE:
1.) CONTRACTOR MAY USE ANCHOR TEES AT HIS OPTION.
2.) HYDRANTS AND VALVES TO OPERATE PER MUNICIPAL STANDARDS

GATE VALVE 7
NOT TO SCALE

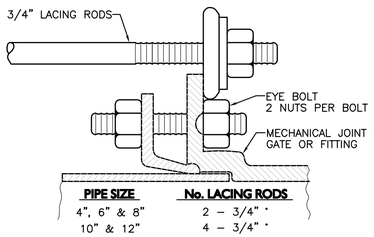

PIPE SIZE	No. LACING RODS
4", 6" & 8"	2 – 3/4" *
10" & 12"	4 – 3/4" *
16"	4 – 3/4" *
20"	6 – 3/4" *

* STANDARD LENGTHS ARE 6' & 10'. COUPLINGS MAY BE USED FOR LONGER LENGTHS.

NOTES:
1. NUMBER OF LACING RODS IS BASED ON MAXIMUM PRESSURE OF 125 P.S.I. IN MAIN.
2. EYE–BOLTS AND LACING RODS ARE TO BE FABRICATED FROM A–36 STEEL.
3. STEEL LACING RODS SHALL HAVE A YIELD STRESS OF NOT LESS THAN 36,000 P.S.I.
4. EYE–BOLTS SHALL HAVE A MINIMUM TENSILE STRENGTH OF 7,000 LBS. EACH.

MECHANICAL JOINT LACING DETAIL 8
NOT TO SCALE

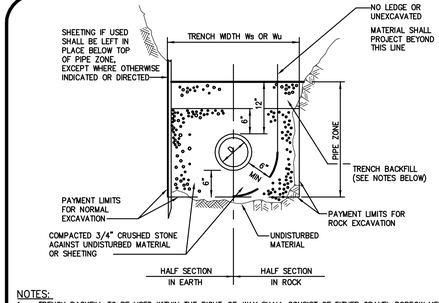

NOTES:
1. TRENCH BACKFILL TO BE USED WITHIN THE RIGHT–OF–WAY SHALL CONSIST OF EITHER GRAVEL BORROW MEETING MHD SPECIFICATION M1.03.0, TYPE "B" OR PROCESSED GRAVEL BORROW FOR SUBBASE MEETING MHD SPECIFICATION M1.03.1.
2. WHERE THE REMOVAL OF 100 SQUARE FEET OR LESS OF ASPHALT IS REQUIRED WITHIN THE RIGHT–OF–WAY, THEN THE TRENCH BACKFILL MATERIAL SHALL CONSIST OF CONTROLLED DENSITY FILL MEETING MHD SPECIFICATION M4.08.0, TYPE "1E" OR "2E".
3. TRENCH BACKFILL MATERIAL TO BE USED OUTSIDE OF THE RIGHT–OF–WAY MAY CONSIST OF MATERIAL GENERATED DURING EXCAVATIONS PROVIDED ALL STONES GREATER THAN 4" ARE REMOVED PRIOR TO PLACEMENT AND COMPACTION.
4. GRANULAR TRENCH BACKFILL MATERIAL USED WITHIN THE RIGHT–OF–WAY SHALL BE PLACED IN MAXIMUM 6" LIFTS AND MECHANICALLY COMPACTED TO A MINIMUM OF 95% OF THE MATERIAL'S MAXIMUM DRY DENSITY AND TO 90% ELSEWHERE AS DETERMINED BY ASTM D 1557.

SEWER TRENCH 9
NOT TO SCALE

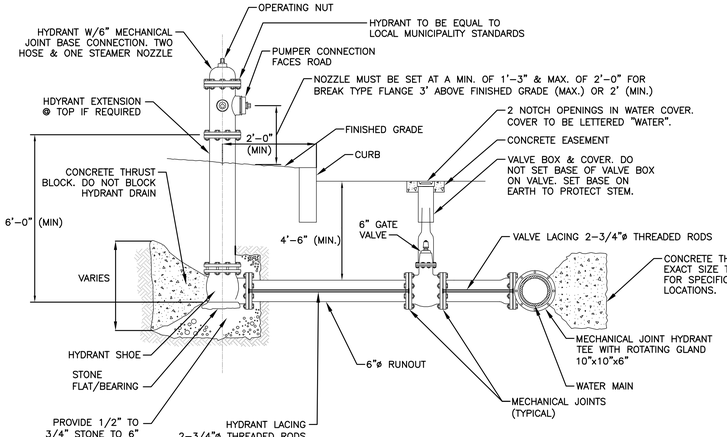

NOTES:
1. ALL HYDRANTS, VALVES AND LOCAL CONNECTIONS SHALL COMPLY WITH THE SPECIFICATIONS OF THE LOCAL MUNICIPALITY.
2. PIPING TO BE RESTRAINED WITH RODDING OR RETAINING GLANDS.
3. GATE VALVE INSTALLATION IS TYPICAL FOR ALL GATES SHOWN ON THE DRAWINGS.

FIRE HYDRANT CONNECTION 10
NOT TO SCALE

N:\PROJECTS\2118–02\CIVIL\DRAWINGS\CURRENT\C–2118–02 – DETAILS.DWG

TOWN OF HINGHAM LIST OF WAIVERS:

SECTION III–A–1.5 – SCHEDULE OF USES
- WAIVER OF THE PROHIBITION OF MULTI–FAMILY DWELLINGS IN THE OFFICE PARK DISTRICT.

SECTION IV–A – SCHEDULE OF DIMENSIONAL REQUIREMENTS
- WAIVER TO ALLOW FOR A MAXIMUM BUILDING HEIGHT OF 35 FEET (50.33'±).
- WAIVER TO ALLOW FOR A MAXIMUM FLOOR AREA RATIO OF 0.15 (0.60).
- WAIVER TO ALLOW FOR A MINIMUM FRONT YARD SETBACK OF 100 FEET (85.5 FEET).

SECTION IV–B–5 – SPECIAL REQUIREMENTS TO SCHEDULE OF DIMENSIONAL REQUIREMENTS
- WAIVER FOR A MINIMUM OF 20 FEET OF GREEN SPACE AROUND THE PERIMETER OF THE PROPERTY.

SECTION IV–B–6
- WAIVER TO ALLOW SITE PLAN REVIEW TO BE PERFORMED BY THE PLANNING BOARD.

SECTION IV–C–4 – GENERAL INTENSITY PROVISIONS
- WAIVER TO ALLOW MORE THAN ONE DWELLING UNIT PER ANY SINGLE LOT (200).

SECTION IV–E–1B – RESIDENTIAL MULTI–UNIT DEVELOPMENT
- WAIVER TO ALLOW THE NUMBER OF DWELLING UNITS PER ACRE TO BE MORE THAN 8 (18.2 UNITS/ACRE)

SECTION IV–E–1D
- WAIVER FROM PROVIDING 2000 S.F. OF LANDSCAPED SPACE PER DWELLING UNIT.

SECTION IV–E–1E
- WAIVER FROM PROVIDING 300 S.F. OF RECREATIONAL SPACE PER DWELLING UNIT.

SECTION IV–E–1F
- WAIVER FROM PROVIDING 50 FEET OF LANDSCAPED BUFFER ADJACENT TO EACH PROPERTY LINE.

SECTION IV–E–1G
- WAIVER FROM PROVIDING 300 S.F. OF RECREATIONAL SPACE PER DWELLING UNIT.

SECTION IV–E–1I
- WAIVER ALLOWING LESS THAN TWO PARKING SPACES PER DWELLING UNIT (1.55 STALLS/UNIT).

SECTION IV–E–5E
- WAIVER TO DEFER TO CURRENT DHCD LOCAL PREFERENCE CATEGORIES.

SECTION V–A–2 – OFF–STREET PARKING REQUIREMENTS
- WAIVER FROM A MINIMUM OF 2.0 PARKING STALLS PER UNIT (1.55 STALLS/UNIT).

SECTION V–A–3 – OFF–STREET PARKING REQUIREMENTS
- WAIVER FROM MINIMUM AISLE WIDTH FOR A PARKING STALL WITH NO OVERHANG

SECTION V–C–1A – EARTH REMOVAL REGULATIONS
- WAIVER ALLOWING THE REMOVAL OF SOIL, LOAM, SAND, GRAVEL, ETC. TO BE REMOVED FROM A LOT.

ARTICLE 10 – PUBLIC WAYS AND COMMON LAND
- WAIVER TO HAVE THE ZONING BOARD OF APPEALS BE THE PERMIT ISSUING AUTHORITY INSTEAD OF THE BOARD OF SELECTMEN.

ARTICLE 10–34A
- WAIVER ALLOWING SOIL, LOAM, SAND, OR GRAVEL FROM LAND IN TOWN NOT IN PUBLIC USE TO ANY LOCATIONS OUTSIDE OF THE TOWN.

ARTICLE 22–5
- WAIVER FROM THE CONSERVATION COMMISSION HAVING THE AUTHORIZATION TO DENY THE PROJECT

ARTICLE 22–8
- WAIVER REQUESTED AS A BOND IS ALREADY REQUIRED OF THE APPLICANT AS PART OF THE 40B PROCESS.

ISSUED FOR DRAINAGE REPORT
JANUARY 10, 2016

PROFESSIONAL ENGINEER FOR
ALLEN & MAJOR ASSOCIATES, INC.

REV	DATE	DESCRIPTION
3.	01/04/2017	ISSUED FOR ZBA RESUBMITTAL
2.	11/2/2016	ISSUED FOR ZBA RESUBMITTAL
1.	10/25/2016	ISSUED FOR ZBA RESUBMITTAL

APPLICANT\OWNER:
BROADSTONE BARE COVE ALLIANCE, LLC. C/O
ALLIANCE RESIDENTIAL COMPANY
184 HIGH STREET, SUITE 401
BOSTON, MA 02110

PROJECT:
BROADSTONE BARE COVE
230 BEAL STREET
HINGHAM, MA

PROJECT NO.	2118-02	DATE:	08-12-2016
SCALE:	AS NOTED	DWG. NAME:	C2118-02
DESIGNED BY:	SJL	CHECKED BY:	CMQ

PREPARED BY:

ALLEN & MAJOR ASSOCIATES, INC.
civil & structural engineering ◆ land surveying
environmental consulting ◆ landscape architecture
www.allenmajor.com
100 COMMERCE WAY
P.O. BOX 2118
WOBURN MA 01888-0118
TEL: (781) 935-6889
FAX: (781) 935-2896
WOBURN, MA ◆ LAKEVILLE, MA ◆ MANCHESTER, NH

THIS DRAWING HAS BEEN PREPARED IN ELECTRONIC FORMAT. CLIENT/CLIENT'S REPRESENTATIVE OR CONSULTANT MAY BE PROVIDED COPIES OF DRAWINGS AND SPECIFICATIONS ON MAGNETIC MEDIA FOR HIS/HER INFORMATION AND USE FOR SPECIFIC APPLICATION TO THIS PROJECT. DUE TO THE POTENTIAL THAT THE MAGNETIC INFORMATION MAY BE MODIFIED UNINTENTIONALLY OR OTHERWISE, ALLEN & MAJOR ASSOCIATES, INC. MAY REMOVE ALL INDICATION OF THE DOCUMENT'S AUTHORSHIP ON THE MAGNETIC MEDIA. PRINTED REPRESENTATIONS OF THE DRAWINGS AND SPECIFICATIONS ISSUED SHALL BE THE ONLY RECORD COPIES OF ALLEN & MAJOR ASSOCIATES, INC.'S WORK PRODUCT.

DRAWING TITLE:	SHEET No.
DETAILS	D-6

Copyright©2017 Allen & Major Associates, Inc.
All Rights Reserved

NOTES:

1. MINIMUM BURIAL DEPTH (FINISH GRADE TO TOP OF PIPE)
   GRAVITY PIPE (SEWER & DRAIN) – SEE PLAN OR PROFILE
   PRESSURE PIPE UNDER PAVING – 4'
   PRESSURE PIPE BENEATH UNPAVED – 3'
   WATER PIPE – 5'
2. WHERE BACKFILL IS DESIGNATED AS COMPACTED, THIS MEANS 90 TO 95% STANDARD PROCTOR. AASHTO T–99. ALL FILL PLACED BELOW PIPES AND STRUCTURES MUST MEET THIS REQUIREMENT.
3. TRENCHES WITHIN PUBLIC RIGHT OF WAY MAY REQUIRE FLOWABLE FILL. VERIFY WITH MUNICIPAL ENGINEER.
4. WHERE WASTE FILLS ARE ENCOUNTERED AT SUBGRADE LEVEL FOR NEW UTILITIES, THE FILL SHOULD BE OVER–EXCAVATE, THE SUBGRADE SHOULD BE RE–COMPACTED, AND BACKFILL CONSISTING OF PIPE BEDDING MATERIAL, CRUSHED STONE OR OTHER SUITABLE GRANULAR FILL SHOULD BE PLACED TO A SUFFICIENT DEPTH TO CREATE A FIRM AND STABLE SUBGRADE (TYPICALLY 12 TO 18 INCHES OVER–EXCAVATION).
5. REFER TO PAVING, CURBS, WALKS AND DRIVEWAY DETAILS.
6. REFER TO LANDSCAPING DETAILS.

FILTER FABRIC USE

	SOIL TYPE	
	SILT OR CLAY	GRANULAR SOIL
ABOVE GROUND WATER	FILTER FABRIC NOT REQUIRED	FILTER FABRIC NOT REQUIRED
BELOW GROUND WATER	FILTER FABRIC REQUIRED	FILTER FABRIC NOT REQUIRED

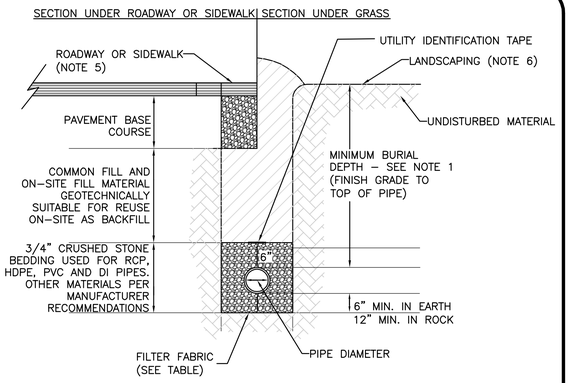

UTILITY TRENCH DETAIL (1)
NOT TO SCALE

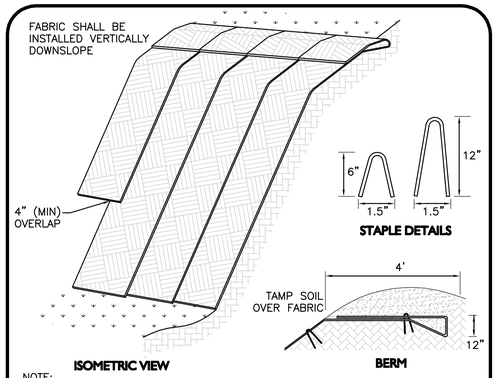

NOTE:
1. SLOPE SURFACE SHALL BE FREE OF ROCKS, CLODS, STICKS AND GRASS. FABRIC SHALL HAVE GOOD SOIL CONTACT.
2. APPLY PERMANENT SEEDING BEFORE PLACING FABRIC.
3. LAY BLANKETS LOOSELY AND STAKE OR STAPLE TO MAINTAIN DIRECT CONTACT WITH THE SOIL. DO NOT STRETCH.
4. CHOOSE MATERIAL BASED ON SLOPE, SOILS, AND APPLICATION.

EROSION CONTROL FABRIC (2)
N.T.S.

NDS, INC.
851 NORTH HARVARD AVE.
LINDSAY, CA 93247
TOLL FREE: 1-800-726-1994
PHONE: (559) 562-9888
FAX: (559) 562-4488
www.ndspro.com

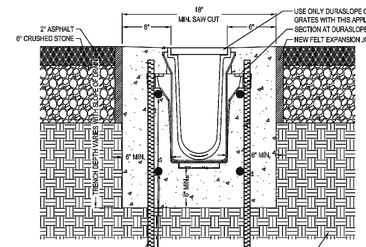

NOTES:
1. CHANNELS TO BE INSTALLED WITH BLANK GRATE. GRATE TO BE PROTECTED FROM CONCRETE POUR (COVER HOLES WITH TAPE).
2. INSTALLATION TO BE COMPLETED IN ACCORDANCE WITH MANUFACTURER'S SPECIFICATIONS.
3. DO NOT SCALE DRAWING.
4. THIS DRAWING IS INTENDED FOR USE BY ARCHITECTS, ENGINEERS, CONTRACTORS, CONSULTANTS AND DESIGN PROFESSIONALS FOR PLANNING PURPOSES ONLY.
5. ALL INFORMATION CONTAINED HEREIN WAS CURRENT AT THE TIME OF DEVELOPMENT BUT MUST BE REVIEWED AND APPROVED BY THE PRODUCT MANUFACTURER TO BE CONSIDERED ACCURATE.

DURA SLOPE TRENCH DRAIN SYSTEM
DURA SLOPE INSTALLATION DETAIL - CLASS "C" 6" ENCASEMENT, REBAR SUSPENSION W/ ASPHALT

REVISION DATE 3-5-2015

TRENCH DRAIN (3)
N.T.S.

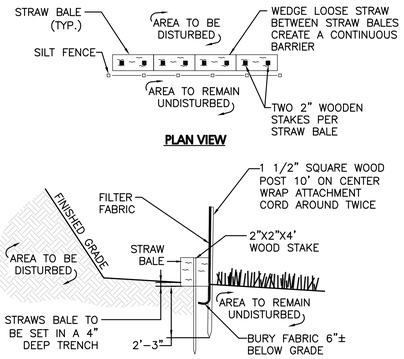

NOTE:
DEPTH TO BE 2' UNLESS POST IS TO BE SET IN PEAT THEN 3' OR DEPTH POSSIBLE BY PUSHING BY HAND SHALL BE REQUIRED.

SILT FENCE AND STRAW BALE DETAIL (4)
NOT TO SCALE

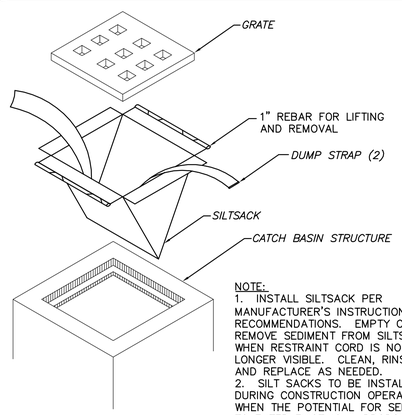

NOTE:
1. INSTALL SILTSACK PER MANUFACTURER'S INSTRUCTIONS AND RECOMMENDATIONS. EMPTY OR REMOVE SEDIMENT FROM SILTSACK WHEN RESTRAINT CORD IS NO LONGER VISIBLE. CLEAN, RINSE, AND REPLACE AS NEEDED.
2. SILT SACKS TO BE INSTALLED DURING CONSTRUCTION OPERATIONS WHEN THE POTENTIAL FOR SEDIMENT TO ENTER EXISTING & PROPOSED BASINS EXISTS.

SILTSACK INLET DETAIL (5)
NOT TO SCALE

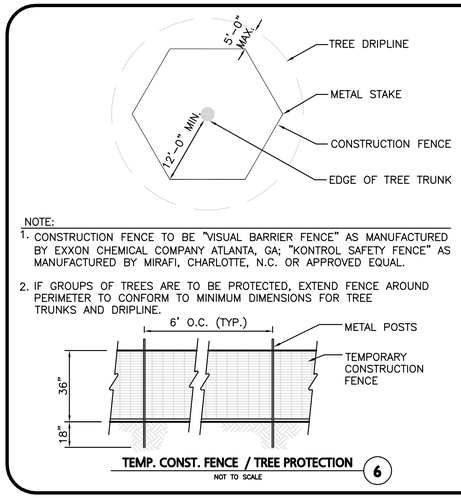

NOTE:
1. CONSTRUCTION FENCE TO BE "VISUAL BARRIER FENCE" AS MANUFACTURED BY EXXON CHEMICAL COMPANY ATLANTA, GA; "KONTROL SAFETY FENCE" AS MANUFACTURED BY MIRAFI, CHARLOTTE, N.C. OR APPROVED EQUAL.
2. IF GROUPS OF TREES ARE TO BE PROTECTED, EXTEND FENCE AROUND PERIMETER TO CONFORM TO MINIMUM DIMENSIONS FOR TREE TRUNKS AND DRIPLINE.

TEMP. CONST. FENCE / TREE PROTECTION (6)
NOT TO SCALE

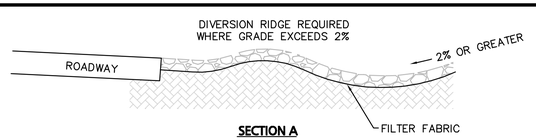

NOTES:
1. THE ENTRANCE SHALL BE MAINTAINED IN A CONDITION THAT WILL PREVENT TRACKING OR FLOWING OF SEDIMENT ONTO PUBLIC RIGHT–OF–WAYS. THIS MAY REQUIRE TOP DRESSING, REPAIR AND/OR CLEANOUT OF ANY MEASURES USED TO TRAP SEDIMENT.
2. WHEN NECESSARY, WHEELS SHALL BE CLEANED PRIOR TO ENTERING THE PUBLIC RIGHT–OF–WAY.
3. WHEN WASHING IS REQUIRED, IT SHALL BE DONE ON AN AREA STABILIZED WITH CRUSHED STONE THAT DRAINS INTO AN APPROVED SEDIMENT TRAP OR SEDIMENT BASIN.
4. USE SANDBAGS, HAYBALES, OR OTHER APPROVED METHODS TO CHANNELIZE RUNOFF TO BASIN AS REQUIRED.

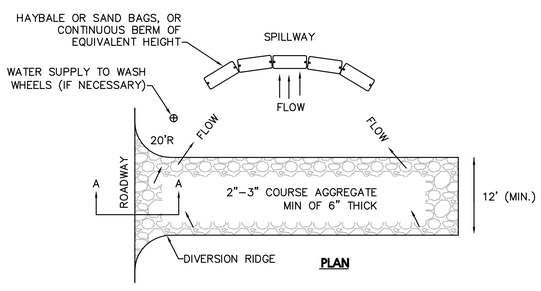

TEMPORARY CONSTRUCTION ENTRANCE/EXIT (7)
NOT TO SCALE

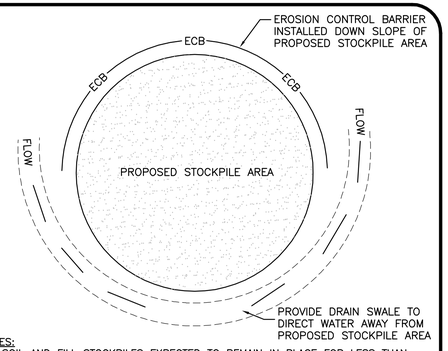

NOTES:
1. SOIL AND FILL STOCKPILES EXPECTED TO REMAIN IN PLACE FOR LESS THAN 90 DAYS SHALL BE COVERED WITH STRAW AND MULCH (AT 100LBS/1,000 SF), OR WITH AN ANCHORED TARP WITHIN 7 DAYS OR PRIOR TO ANY RAINFALL.
2. SOIL AND FILL STOCKPILES EXPECTED TO REMAIN IN PLACE FOR 90 DAYS OR MORE SHALL BE SEEDED WITH WINTER RYE (FOR FALL SEEDING AT 1LB/1,000 SF) OR OATS (FOR SUMMER SEEDING AT 2LB/1,000 SF) AND THEN COVERED WITH HAY MULCH (AT 100LB/1,000 SF) OR AN ANCHORED TARP WITHIN 7 DAYS OR PRIOR TO ANY RAINFALL.

STOCKPILE PROTECTION (8)
NOT TO SCALE

NOTES:
1. HINGE MECHANISM TO BE PROVIDED.
2. TRASH RACK SHALL BE HOT–DIP GALVANIZED AFTER FABRICATION.
3. ALL MATERIALS TO BE NON–CORROSIVE.
4. SMALL CONCRETE PAD TO BE INSTALLED UNDERNEATH ORIFICE.

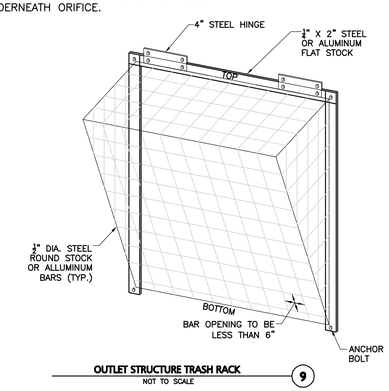

OUTLET STRUCTURE TRASH RACK (9)
NOT TO SCALE

TOWN OF HINGHAM LIST OF WAIVERS:

SECTION III–A–1.5 – SCHEDULE OF USES
- WAIVER OF THE PROHIBITION OF MULTI–FAMILY DWELLINGS IN THE OFFICE PARK DISTRICT.

SECTION IV–A – SCHEDULE OF DIMENSIONAL REQUIREMENTS
- WAIVER TO ALLOW FOR A MAXIMUM BUILDING HEIGHT OF 35 FEET (50.33'±).
- WAIVER TO ALLOW FOR A MAXIMUM FLOOR AREA RATIO OF 0.15 (0.60).
- WAIVER TO ALLOW FOR A MINIMUM FRONT YARD SETBACK OF 100 FEET (85.5 FEET).

SECTION IV–B–5 – SPECIAL REQUIREMENTS TO SCHEDULE OF DIMENSIONAL REQUIREMENTS
- WAIVER FOR A MINIMUM OF 20 FEET OF GREEN SPACE AROUND THE PERIMETER OF THE PROPERTY.

SECTION IV–B–6
- WAIVER TO ALLOW SITE PLAN REVIEW TO BE PERFORMED BY THE PLANNING BOARD.

SECTION IV–C–4 – GENERAL INTENSITY PROVISIONS
- WAIVER TO ALLOW MORE THAN ONE DWELLING UNIT PER ANY SINGLE LOT (200).

SECTION IV–E–1B – RESIDENTIAL MULTI–UNIT DEVELOPMENT
- WAIVER TO ALLOW THE NUMBER OF DWELLING UNITS PER ACRE TO BE MORE THAN 8 (18.2 UNITS/ACRE)

SECTION IV–E–1D
- WAIVER FROM PROVIDING 2000 S.F. OF LANDSCAPED SPACE PER DWELLING UNIT.

SECTION IV–E–1E
- WAIVER FROM PROVIDING 300 S.F. OF RECREATIONAL SPACE PER DWELLING UNIT.

SECTION IV–E–1F
- WAIVER FROM PROVIDING 50 FEET OF LANDSCAPED BUFFER ADJACENT TO EACH PROPERTY LINE.

SECTION IV–E–1G
- WAIVER FROM PROVIDING 300 S.F. OF RECREATIONAL SPACE PER DWELLING UNIT.

SECTION IV–E–1I
- WAIVER ALLOWING LESS THAN TWO PARKING SPACES PER DWELLING UNIT (1.55 STALLS/UNIT).

SECTION IV–E–5E
- WAIVER TO DEFER TO CURRENT DHCD LOCAL PREFERENCE CATEGORIES.

SECTION V–A–2 – OFF–STREET PARKING REQUIREMENTS
- WAIVER FROM A MINIMUM OF 2.0 PARKING STALLS PER UNIT (1.55 STALLS/UNIT).

SECTION V–A–3 – OFF–STREET PARKING REQUIREMENTS
- WAIVER FROM MINIMUM AISLE WIDTH FOR A PARKING STALL WITH NO OVERHANG

SECTION V–C–1A – EARTH REMOVAL REGULATIONS
- WAIVER ALLOWING THE REMOVAL OF SOIL, LOAM, SAND, GRAVEL, ETC. TO BE REMOVED FROM A LOT.

ARTICLE 10 – PUBLIC WAYS AND COMMON LAND
- WAIVER TO HAVE THE ZONING BOARD OF APPEALS BE THE PERMIT ISSUING AUTHORITY INSTEAD OF THE BOARD OF SELECTMEN.

ARTICLE 10–34A
- WAIVER ALLOWING SOIL, LOAM, SAND, OR GRAVEL FROM LAND IN TOWN NOT IN PUBLIC USE TO ANY LOCATIONS OUTSIDE OF THE TOWN.

ARTICLE 22–5
- WAIVER FROM THE CONSERVATION COMMISSION HAVING THE AUTHORIZATION TO DENY THE PROJECT

ARTICLE 22–8
- WAIVER REQUESTED AS A BOND IS ALREADY REQUIRED OF THE APPLICANT AS PART OF THE 40B PROCESS.

ISSUED FOR DRAINAGE REPORT
JANUARY 10, 2016

PROFESSIONAL ENGINEER FOR
ALLEN & MAJOR ASSOCIATES, INC.

REV	DATE	DESCRIPTION
3.	01/04/2017	ISSUED FOR ZBA RESUBMITTAL
2.	11/2/2016	ISSUED FOR ZBA RESUBMITTAL
1.	10/25/2016	ISSUED FOR ZBA RESUBMITTAL

APPLICANT\OWNER:
BROADSTONE BARE COVE ALLIANCE, LLC. C/O
ALLIANCE RESIDENTIAL COMPANY
184 HIGH STREET, SUITE 401
BOSTON, MA 02110

PROJECT:
BROADSTONE BARE COVE
230 BEAL STREET
HINGHAM, MA

PROJECT NO.	2118-02	DATE:	08-12-2016
SCALE:	AS NOTED	DWG. NAME:	C2118-02
DESIGNED BY:	SJL	CHECKED BY:	CMQ

PREPARED BY:

ALLEN & MAJOR ASSOCIATES, INC.
civil & structural engineering ◆ land surveying
environmental consulting ◆ landscape architecture
www.allenmajor.com
100 COMMERCE WAY
P.O. BOX 2118
WOBURN MA 01888-0118
TEL: (781) 935-6889
FAX: (781) 935-2896
WOBURN, MA ◆ LAKEVILLE, MA ◆ MANCHESTER, NH

THIS DRAWING HAS BEEN PREPARED IN ELECTRONIC FORMAT. CLIENT/CLIENT'S REPRESENTATIVE OR CONSULTANT MAY BE PROVIDED COPIES OF DRAWINGS AND SPECIFICATIONS ON MAGNETIC MEDIA FOR HIS/HER INFORMATION AND USE FOR SPECIFIC APPLICATION TO THIS PROJECT. DUE TO THE POTENTIAL THAT THE MAGNETIC INFORMATION MAY BE MODIFIED UNINTENTIONALLY OR OTHERWISE, ALLEN & MAJOR ASSOCIATES, INC. MAY REMOVE ALL INDICATION OF THE DOCUMENT'S AUTHORSHIP ON THE MAGNETIC MEDIA. PRINTED REPRESENTATIONS OF THE DRAWINGS AND SPECIFICATIONS ISSUED SHALL BE THE ONLY RECORD COPIES OF ALLEN & MAJOR ASSOCIATES, INC.'S WORK PRODUCT.

DRAWING TITLE: DETAILS

SHEET No. D-7

Copyright©2017 Allen & Major Associates, Inc.
All Rights Reserved

N:\PROJECTS\2118–02\CIVIL\DRAWINGS\CURRENT\C–2118–02 – DETAILS.DWG

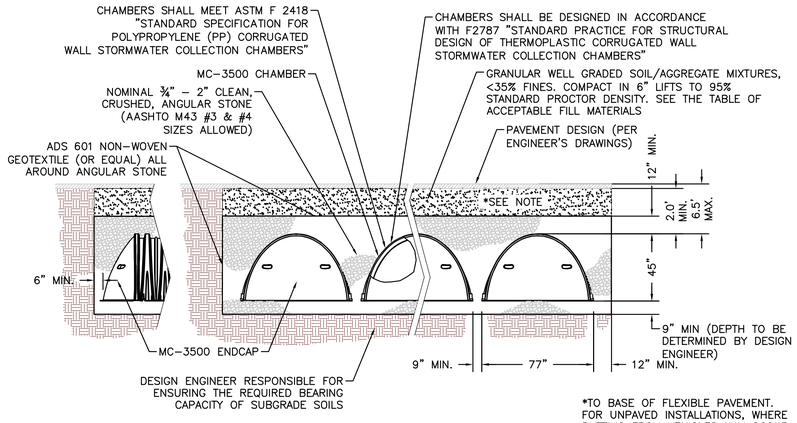

*TO BASE OF FLEXIBLE PAVEMENT. FOR UNPAVED INSTALLATIONS, WHERE RUTTING FROM VEHICLES MAY OCCUR, INCREASE COVER TO 30".

NOTES:

1. PERIMETER STONE MUST ALWAYS BE BROUGHT UP EVENLY WITH BACKFILL OF BED.
2. PERIMETER STONE MUST EXTEND HORIZONTALLY TO THE EXCAVATION WALL FOR BOTH STRAIGHT OR SLOPED SIDEWALLS.
3. THE INSTALLED CHAMBER SYSTEM SHALL PROVIDE THE LOAD FACTORS SPECIFIED IN THE AASHTO LRFD BRIDGE DESIGN SPECIFICATIONS SECTION 12.12 FOR EARTH AND LIVE LOADS, WITH CONSIDERATION FOR IMPACT AND MULTIPLE VEHICLE PRESENCES.

StormTech®

Detention• Retention• Water Quality

70 INWOOD ROAD, SUITE 3 | ROCKY HILL | CT | 06067

860-529-8188 | 888-892-2694 | WWW.STORMTECH.COM

STORMTECH MC-3500 TYPICAL CROSS-SECTION (1)

NOT TO SCALE

	MATERIAL LOCATION	DESCRIPTION	AASHTO MATERIAL CLASSIFICATIONS	COMPACTION / DENSITY REQUIREMENT
D	**FINAL FILL:** FILL MATERIAL FOR LAYER 'D' STARTS FROM THE TOP OF THE 'C' LAYER TO THE BOTTOM OF FLEXIBLE PAVEMENT OR UNPAVED FINISHED GRADE ABOVE. NOTE THAT PAVEMENT SUB-BASE MAY BE PART OF THE 'D' LAYER	ANY SOIL/ROCK MATERIALS, NATIVE SOILS, OR PER ENGINEER'S PLANS. CHECK PLANS FOR PAVEMENT SUB-GRADE REQUIREMENTS.	N/A	PREPARE PER SITE DESIGN ENGINEER'S PLANS. PAVED INSTALLATIONS MAY HAVE STRINGENT MATERIAL AND PREPARATION REQUIREMENTS.
C	**INITIAL FILL:** FILL MATERIAL FOR LAYER 'C' STARTS FROM THE TOP OF THE EMBEDMENT STONE ('B' LAYER) TO 18" (450 mm) ABOVE THE TOP OF THE CHAMBER. NOTE THAT PAVEMENT SUB-BASE MAY BE A PART OF THE 'C' LAYER.	GRANULAR WELL-GRADED SOIL/AGGREGATE MIXTURES, <35% FINES OR PROCESSED AGGREGATE. MOST PAVEMENT SUB-BASE MATERIALS CAN BE USED IN LIEU OF THIS LAYER.	AASHTO M145[1] A-1, A-2-4, A-3 OR AASHTO M43[1] 3, 357, 4, 467, 5, 56, 57, 6, 67, 68, 7, 78, 8, 89, 9, 10	BEGIN COMPACTIONS AFTER 12" (300 mm) OF MATERIAL OVER THE CHAMBERS IS REACHED. COMPACT ADDITIONAL LAYERS IN 6" (150 mm) MAX LIFTS TO A MIN. 95% PROCTOR DENSITY FOR WELL GRADED MATERIAL AND 95% RELATIVE DENSITY FOR PROCESSED AGGREGATE MATERIALS. ROLLER GROSS VEHICLE WEIGHT NOT TO EXCEED 12,000 lbs (53 kN). DYNAMIC FORCE NOT TO EXCEED 20,000 lbs (89 kN).
B	**EMBEDMENT STONE:** FILL SURROUNDING THE CHAMBERS FROM THE FOUNDATION STONE ('A' LAYER) TO THE 'C' LAYER ABOVE.	CLEAN, CRUSHED, ANGULAR STONE, NOMINAL SIZE DISTRIBUTION BETWEEN 3/4-2 INCH (20-50 mm)	AASHTO M43[1] 3, 357, 4, 467, 5, 56, 57	NO COMPACTION REQUIRED.
A	**FOUNDATION STONE:** FILL BELOW CHAMBERS FROM THE SUB-GRADE UP TO THE FOOT (BOTTOM) OF THE CHAMBER.	CLEAN, CRUSHED, ANGULAR STONE, NOMINAL SIZE DISTRIBUTION BETWEEN 3/4-2 INCH (20-50 mm)	AASHTO M43[1] 3, 357, 4, 467, 5, 56, 57	PLATE COMPACT OR ROLL TO ACHIEVE A FLAT SURFACE. [2] [3]

PLEASE NOTE:

1. THE LISTED AASHTO DESIGNATIONS ARE FOR GRADATIONS ONLY. THE STONE MUST ALSO BE CLEAN, CRUSHED, ANGULAR. FOR EXAMPLE, A SPECIFICATION FOR #4 STONE WOULD STATE: "CLEAN, CRUSHED, ANGULAR NO. 4 (AASHTO M43) STONE".
2. STORMTECH COMPACTION REQUIREMENTS ARE MET FOR 'A' LOCATION MATERIALS WHEN PLACED AND COMPACTED IN 9" (230 mm) (MAX) LIFTS USING TWO FULL COVERAGES WITH A VIBRATORY COMPACTOR.
3. WHERE INFILTRATION SURFACES MAY BE COMPROMISED BY COMPACTION, FOR STANDARD DESIGN LOAD CONDITIONS, A FLAT SURFACE MAY BE ACHIEVED BY RAKING OR DRAGGING WITHOUT COMPACTION EQUIPMENT. FOR SPECIAL LOAD DESIGNS, CONTACT STORMTECH FOR COMPACTION REQUIREMENTS.

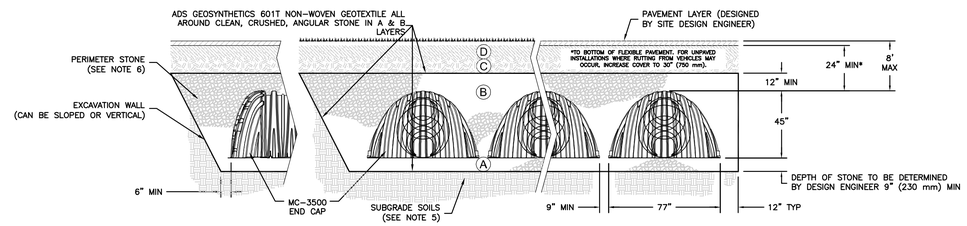

NOTES:

1. MC-3500 CHAMBERS SHALL CONFORM TO THE REQUIREMENTS OF ASTM F2418 "STANDARD SPECIFICATION FOR POLYPROPYLENE (PP) CORRUGATED WALL STORMWATER COLLECTION CHAMBERS".
2. MC-3500 CHAMBERS SHALL BE DESIGNED IN ACCORDANCE WITH ASTM F2787 "STANDARD PRACTICE FOR STRUCTURAL DESIGN OF THERMOPLASTIC CORRUGATED WALL STORMWATER COLLECTION CHAMBERS".
3. "ACCEPTABLE FILL MATERIALS" TABLE ABOVE PROVIDES MATERIAL LOCATIONS, DESCRIPTIONS, GRADATIONS, AND COMPACTION REQUIREMENTS FOR FOUNDATION, EMBEDMENT, AND FILL MATERIALS.
4. THE "SITE DESIGN ENGINEER" REFERS TO THE ENGINEER RESPONSIBLE FOR THE DESIGN AND LAYOUT OF THE STORMTECH CHAMBERS FOR THIS PROJECT.
5. THE SITE DESIGN ENGINEER IS RESPONSIBLE FOR ASSESSING THE BEARING RESISTANCE (ALLOWABLE BEARING CAPACITY) OF THE SUBGRADE SOILS AND THE DEPTH OF FOUNDATION STONE WITH CONSIDERATION FOR THE RANGE OF EXPECTED SOIL MOISTURE CONDITIONS.
6. PERIMETER STONE MUST BE EXTENDED HORIZONTALLY TO THE EXCAVATION WALL FOR BOTH VERTICAL AND SLOPED EXCAVATION WALLS.
7. ONCE LAYER 'C' IS PLACED, ANY SOIL/MATERIAL CAN BE PLACED IN LAYER 'D' UP TO THE FINISHED GRADE. MOST PAVEMENT SUBBASE SOILS CAN BE USED TO REPLACE THE MATERIAL REQUIREMENTS OF LAYER 'C' OR 'D' AT THE SITE DESIGN ENGINEER'S DISCRETION.

ACCEPTABLE FILL MATERIALS: STORMTECH MC-3500 CHAMBER SYSTEMS (2)

NOT TO SCALE

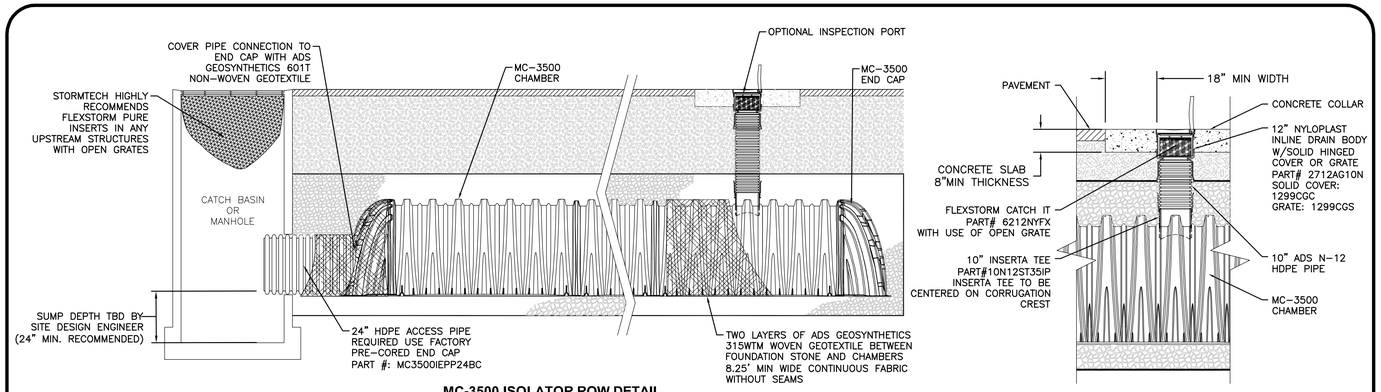

MC-3500 ISOLATOR ROW DETAIL

NTS

ISOLATOR ROW & INSPECTION PORT (3)

NOT TO SCALE

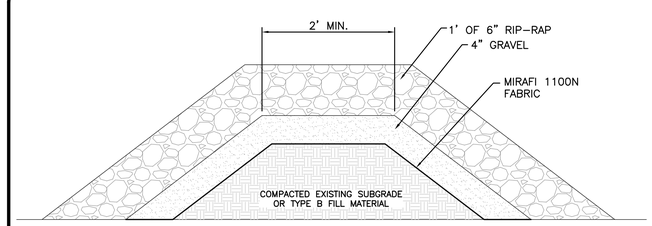

SECTION VIEW

NOTE:

1. REFER TO PLAN SHEETS, C-4A TO C-4C FOR CHECK DAM HEIGHT, DISTANCE FROM FLARED END SECTION.
2. TOP OF CHECK DAM ELEVATION CORRESPONDS TO THE TOP OF GRAVEL ELEVATION OF THE CHECK DAM, NOT THE TOP OF RIP RAP ELEVATION.

SEDIMENT FOREBAY CHECK DAM DETAIL (4)

NOT TO SCALE

N:\PROJECTS\2118-02\CIVIL\DRAWINGS\CURRENT\C-2118-02 – DETAILS.DWG

TOWN OF HINGHAM LIST OF WAIVERS:

SECTION III-A-1.5 – SCHEDULE OF USES
- WAIVER OF THE PROHIBITION OF MULTI-FAMILY DWELLINGS IN THE OFFICE PARK DISTRICT.

SECTION IV-A – SCHEDULE OF DIMENSIONAL REQUIREMENTS
- WAIVER TO ALLOW FOR A MAXIMUM BUILDING HEIGHT OF 35 FEET (50.33'±).
- WAIVER TO ALLOW FOR A MAXIMUM FLOOR AREA RATIO OF 0.15 (0.60).
- WAIVER TO ALLOW FOR A MINIMUM FRONT YARD SETBACK OF 100 FEET (85.5 FEET).

SECTION IV-B-5 – SPECIAL REQUIREMENTS TO SCHEDULE OF DIMENSIONAL REQUIREMENTS
- WAIVER FOR A MINIMUM OF 20 FEET OF GREEN SPACE AROUND THE PERIMETER OF THE PROPERTY.

SECTION IV-B-6
- WAIVER TO ALLOW SITE PLAN REVIEW TO BE PERFORMED BY THE PLANNING BOARD.

SECTION IV-C-4 – GENERAL INTENSITY PROVISIONS
- WAIVER TO ALLOW MORE THAN ONE DWELLING UNIT PER ANY SINGLE LOT (200).

SECTION IV-E-1B – RESIDENTIAL MULTI-UNIT DEVELOPMENT
- WAIVER TO ALLOW THE NUMBER OF DWELLING UNITS PER ACRE TO BE MORE THAN 8 (18.2 UNITS/ACRE)

SECTION IV-E-1D
- WAIVER FROM PROVIDING 2000 S.F. OF LANDSCAPED SPACE PER DWELLING UNIT.

SECTION IV-E-1E
- WAIVER FROM PROVIDING 300 S.F. OF RECREATIONAL SPACE PER DWELLING UNIT.

SECTION IV-E-1F
- WAIVER FROM PROVIDING 50 FEET OF LANDSCAPED BUFFER ADJACENT TO EACH PROPERTY LINE.

SECTION IV-E-1G
- WAIVER FROM PROVIDING 300 S.F. OF RECREATIONAL SPACE PER DWELLING UNIT.

SECTION IV-E-1I
- WAIVER ALLOWING LESS THAN TWO PARKING SPACES PER DWELLING UNIT (1.55 STALLS/UNIT).

SECTION IV-E-5E
- WAIVER TO DEFER TO CURRENT DHCD LOCAL PREFERENCE CATEGORIES.

SECTION V-A-2 – OFF-STREET PARKING REQUIREMENTS
- WAIVER FROM A MINIMUM OF 2.0 PARKING STALLS PER UNIT (1.55 STALLS/UNIT).

SECTION V-A-3 – OFF-STREET PARKING REQUIREMENTS
- WAIVER FROM MINIMUM AISLE WIDTH FOR A PARKING STALL WITH NO OVERHANG

SECTION V-C-1A – EARTH REMOVAL REGULATIONS
- WAIVER ALLOWING THE REMOVAL OF SOIL, LOAM, SAND, GRAVEL, ETC. TO BE REMOVED FROM A LOT.

ARTICLE 10 – PUBLIC WAYS AND COMMON LAND
- WAIVER TO HAVE THE ZONING BOARD OF APPEALS BE THE PERMIT ISSUING AUTHORITY INSTEAD OF THE BOARD OF SELECTMEN.

ARTICLE 10-34A
- WAIVER ALLOWING SOIL, LOAM, SAND, OR GRAVEL FROM LAND IN TOWN NOT IN PUBLIC USE TO ANY LOCATIONS OUTSIDE OF THE TOWN.

ARTICLE 22-5
- WAIVER FROM THE CONSERVATION COMMISSION HAVING THE AUTHORIZATION TO DENY THE PROJECT

ARTICLE 22-8
- WAIVER REQUESTED AS A BOND IS ALREADY REQUIRED OF THE APPLICANT AS PART OF THE 40B PROCESS.

ISSUED FOR DRAINAGE REPORT

JANUARY 10, 2016

PROFESSIONAL ENGINEER FOR ALLEN & MAJOR ASSOCIATES, INC.

REV	DATE	DESCRIPTION
3.	01/04/2017	ISSUED FOR ZBA RESUBMITTAL
2.	11/2/2016	ISSUED FOR ZBA RESUBMITTAL
1.	10/25/2016	ISSUED FOR ZBA RESUBMITTAL

APPLICANT\OWNER:

BROADSTONE BARE COVE ALLIANCE, LLC. C/O
ALLIANCE RESIDENTIAL COMPANY
184 HIGH STREET, SUITE 401
BOSTON, MA 02110

PROJECT:

BROADSTONE BARE COVE
230 BEAL STREET
HINGHAM, MA

PROJECT NO.	2118-02	DATE:	08-12-2016
SCALE:	AS NOTED	DWG. NAME:	C2118-02
DESIGNED BY:	SJL	CHECKED BY:	CMQ

PREPARED BY:

ALLEN & MAJOR ASSOCIATES, INC.
civil & structural engineering ◆ land surveying
environmental consulting ◆ landscape architecture
www.allenmajor.com
100 COMMERCE WAY
P.O. BOX 2118
WOBURN MA 01888-0118
TEL: (781) 935-6889
FAX: (781) 935-2896
WOBURN, MA ◆ LAKEVILLE, MA ◆ MANCHESTER, NH

THIS DRAWING HAS BEEN PREPARED IN ELECTRONIC FORMAT. CLIENT/CLIENT'S REPRESENTATIVE OR CONSULTANT MAY BE PROVIDED COPIES OF DRAWINGS AND SPECIFICATIONS ON MAGNETIC MEDIA FOR HIS/HER INFORMATION AND USE FOR SPECIFIC APPLICATION TO THIS PROJECT. DUE TO THE POTENTIAL THAT THE MAGNETIC INFORMATION MAY BE MODIFIED UNINTENTIONALLY OR OTHERWISE, ALLEN & MAJOR ASSOCIATES, INC. MAY REMOVE ALL INDICATION OF THE DOCUMENT'S AUTHORSHIP ON THE MAGNETIC MEDIA. PRINTED REPRESENTATIONS OF THE DRAWINGS AND SPECIFICATIONS ISSUED SHALL BE THE ONLY RECORD COPIES OF ALLEN & MAJOR ASSOCIATES, INC.'S WORK PRODUCT.

DRAWING TITLE: DETAILS

SHEET No. D-8

Copyright©2017 Allen & Major Associates, Inc.
All Rights Reserved

FRAME AND COVER
DIAMETER VARIES (NTS)

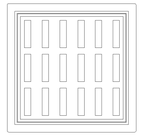

FRAME AND GRATE
DIAMETER VARIES (NTS)

GENERAL NOTES
1. CONTECH TO PROVIDE ALL MATERIALS UNLESS NOTED OTHERWISE.
2. DIMENSIONS MARKED WITH ( ) ARE REFERENCE DIMENSIONS. ACTUAL DIMENSIONS MAY VARY.
3. FOR FABRICATION DRAWINGS WITH DETAILED STRUCTURE DIMENSIONS AND WEIGHTS, PLEASE CONTACT YOUR CONTECH CONSTRUCTION PRODUCTS REPRESENTATIVE. www.contech-cpi.com
4. CDS WATER QUALITY STRUCTURE SHALL BE IN ACCORDANCE WITH ALL DESIGN DATA AND INFORMATION CONTAINED IN THIS DRAWING.
5. STRUCTURE SHALL MEET AASHTO HS20 AND CASTINGS SHALL MEET AASHTO M306 LOAD RATING, ASSUMING GROUNDWATER ELEVATION AT, OR BELOW, THE OUTLET PIPE INVERT ELEVATION. ENGINEER OF RECORD TO CONFIRM ACTUAL GROUNDWATER ELEVATION.
6. PVC HYDRAULIC SHEAR PLATE IS PLACED ON SHELF AT BOTTOM OF SCREEN CYLINDER. REMOVE AND REPLACE AS NECESSARY DURING MAINTENANCE CLEANING.

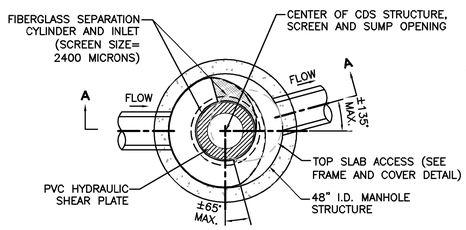

PLAN VIEW
NOT TO SCALE

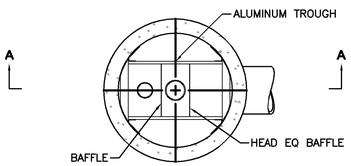

PLAN VIEW
NOT TO SCALE

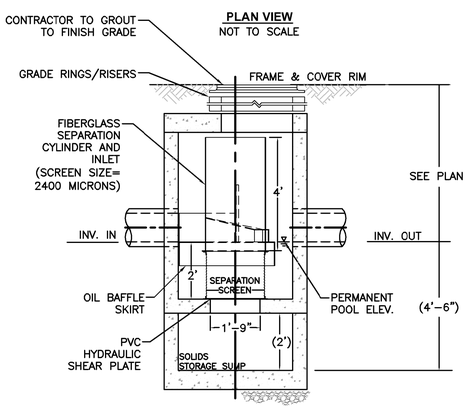

SECTION A-A
NOT TO SCALE

HIGH EFFICIENCY CDS2015-4-C
(OR APPROVED EQUAL)

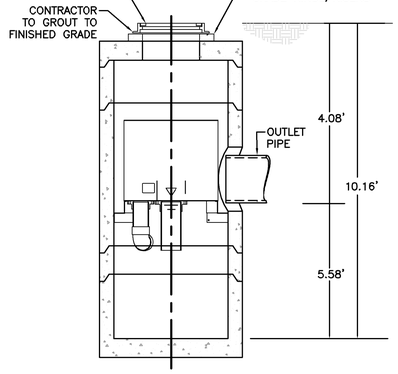

SECTION A-A
NOT TO SCALE

PROPRIETARY SEPARATORS - VORTSENTRY HS36

PROPRIETARY SEPARATORS - HIGH EFFICIENCY CDS (1)

INSTALLATION NOTES
1. ANY SUB-BASE, BACKFILL DEPTH, AND/OR ANTI-FLOTATION PROVISIONS ARE SITE-SPECIFIC DESIGN CONSIDERATIONS AND SHALL BE SPECIFIED BY ENGINEER OF RECORD.
2. CONTRACTOR TO PROVIDE EQUIPMENT WITH SUFFICIENT LIFTING AND REACH CAPACITY TO LIFT AND SET THE CDS MANHOLE STRUCTURE (LIFTING CLUTCHES PROVIDED).
3. CONTRACTOR TO ADD JOINT SEALANT BETWEEN ALL STRUCTURE SECTIONS, AND ASSEMBLE STRUCTURE.
4. CONTRACTOR TO PROVIDE, INSTALL, AND GROUT PIPES. MATCH PIPE INVERTS WITH ELEVATIONS SHOWN.
5. CONTRACTOR TO TAKE APPROPRIATE MEASURES TO ASSURE UNIT IS WATER TIGHT, HOLDING WATER TO FLOWLINE INVERT MINIMUM. IT IS SUGGESTED THAT ALL JOINTS BELOW PIPE INVERTS ARE GROUTED.

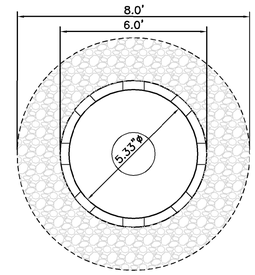

PLAN
NOT TO SCALE

GENERAL NOTES: CONCRETE:
1. ALL DRAINAGE STUCTURES SHALL BE PRECAST CONCRETE.
2. 28 DAY COMPRESSIVE STRENGTH F'E = 5,000 PSI STEEL REINFORCEMENT: ASTM A-615, GRADE 60, ASTM A-185, GRADE 65
3. COVER TO STEEL-1" MINIMUM
4. DESIGN LOADING-AASHTO HS-20-44 LIVE LOAD
5. EARTH COVER-0 TO 5 FEET MAX.
6. CONSTRUCTION JOINT-FLAT
7. APPROXIMATE WEIGHTS TOP SLAB @ 2.50 TONS 6' BASE SECTION @ 3.50 TONS.

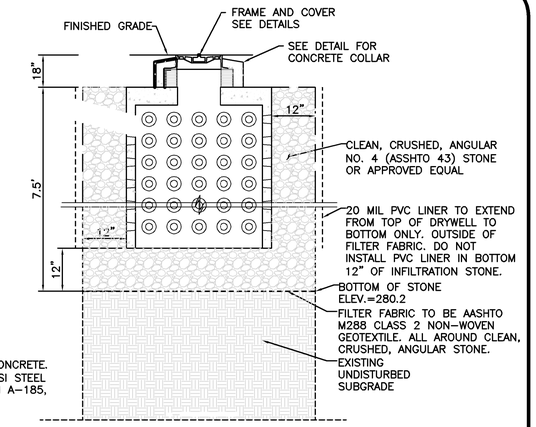

ELEVATION
PRECAST DRYWELL
NOT TO SCALE

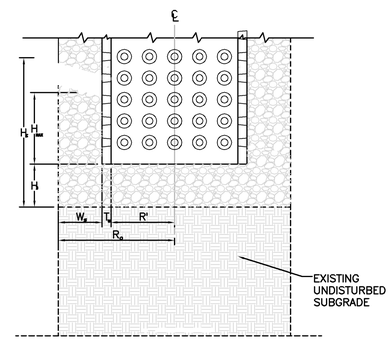

$V=\pi r^2 h$ (STORAGE VOLUME)
LEGEND:
HW = HISTORICAL HIGH GROUNDWATER FROM BOSTON GROUNDWATER TRUST WELLS = 5.2±
H_{MAX} = MAX. STORAGE HEIGHT = 5.5'
H_B = HEIGHT OF BASE STONE = 1.0'
H_S = HEIGHT OF STONE = 7.5'
R_I = INSIDE RADIUS (DRYWELL) = 2.67'
R_O = OUTSIDE RADIUS (DRYWELL PLUS STONE) = 4.0'
T_W = THICKNESS OF WALL = 0.33' (4")
W_S = WIDTH OF STONE = 1.0'

1000 GALLON CONCRETE CYLINDRICAL DRY WELL (2)

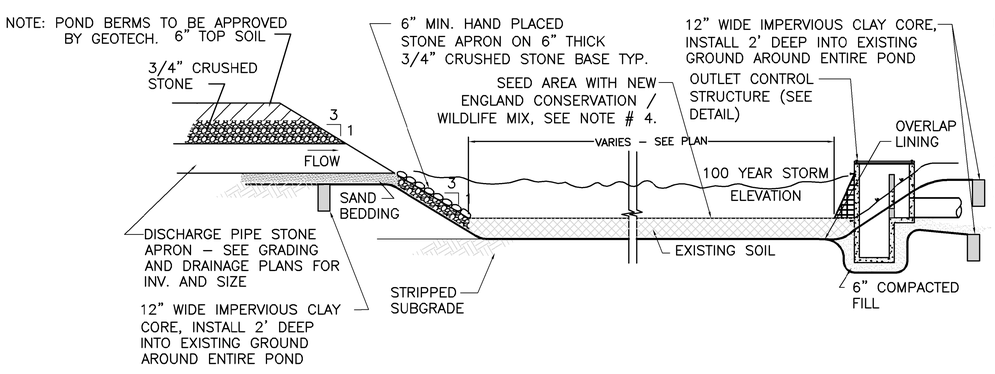

NOTE:
1. CLAY CORE TO BE CONSTRUCTED OF IMPERVIOUS SOIL BORROW AND TO BE COMPACTED TO 90% OF MAXIMUM DRY DENSITY WITH 6" OF TOPSOIL. BERM TO BE SEEDED. IMPERVIOUS CLAY CORE TO BE FREE OF PEAT STUMPS, BRUSH, ORGANIC SOILS AND OTHER DELETERIOUS MATERIALS. CORE MATERIAL TO HAVE PERMEABILITY OF 1 x10^-4 CM/SEC
2. FINAL DESIGN TO BE BASED ON GEOTECHNICAL REPORT.
3. "NEW ENGLAND CONSERVATION WILDLIFE MIX" SEED WILL BE DISPERSED ON THE SLOPES AND BOTTOM OF THE DETENTION AREA AT A RATIO OF 1 POUND PER 1,000 SQUARE FEET AS AVAILABLE FROM NEW ENGLAND WETLAND PLANTS, INC. 820 WEST ST., AMHERST, MA, 413-548-8000. SEE LANDSCAPE PLAN FOR SEED MIX.

TYPICAL DETENTION POND DETAIL (3)
NOT TO SCALE

TOWN OF HINGHAM LIST OF WAIVERS:

SECTION III-A-1.5 - SCHEDULE OF USES
- WAIVER OF THE PROHIBITION OF MULTI-FAMILY DWELLINGS IN THE OFFICE PARK DISTRICT.

SECTION IV-A - SCHEDULE OF DIMENSIONAL REQUIREMENTS
- WAIVER TO ALLOW FOR A MAXIMUM BUILDING HEIGHT OF 35 FEET (50.33'±).
- WAIVER TO ALLOW FOR A MAXIMUM FLOOR AREA RATIO OF 0.15 (0.60).
- WAIVER TO ALLOW FOR A MINIMUM FRONT YARD SETBACK OF 100 FEET (85.5 FEET).

SECTION IV-B-5 - SPECIAL REQUIREMENTS TO SCHEDULE OF DIMENSIONAL REQUIREMENTS
- WAIVER FOR A MINIMUM OF 20 FEET OF GREEN SPACE AROUND THE PERIMETER OF THE PROPERTY.

SECTION IV-B-6
- WAIVER TO ALLOW SITE PLAN REVIEW TO BE PERFORMED BY THE PLANNING BOARD.

SECTION IV-C-4 - GENERAL INTENSITY PROVISIONS
- WAIVER TO ALLOW MORE THAN ONE DWELLING UNIT PER ANY SINGLE LOT (200).

SECTION IV-E-1B - RESIDENTIAL MULTI-UNIT DEVELOPMENT
- WAIVER TO ALLOW THE NUMBER OF DWELLING UNITS PER ACRE TO BE MORE THAN 8 (18.2 UNITS/ACRE)

SECTION IV-E-1D
- WAIVER FROM PROVIDING 2000 S.F. OF LANDSCAPED SPACE PER DWELLING UNIT.

SECTION IV-E-1E
- WAIVER FROM PROVIDING 300 S.F. OF RECREATIONAL SPACE PER DWELLING UNIT.

SECTION IV-E-1F
- WAIVER FROM PROVIDING 50 FEET OF LANDSCAPED BUFFER ADJACENT TO EACH PROPERTY LINE.

SECTION IV-E-1G
- WAIVER FROM PROVIDING 300 S.F. OF RECREATIONAL SPACE PER DWELLING UNIT.

SECTION IV-E-1I
- WAIVER ALLOWING LESS THAN TWO PARKING SPACES PER DWELLING UNIT (1.55 STALLS/UNIT).

SECTION IV-E-5E
- WAIVER TO DEFER TO CURRENT DHCD LOCAL PREFERENCE CATEGORIES.

SECTION V-A-2 - OFF-STREET PARKING REQUIREMENTS
- WAIVER FROM A MINIMUM OF 2.0 PARKING STALLS PER UNIT (1.55 STALLS/UNIT).

SECTION V-A-3 - OFF-STREET PARKING REQUIREMENTS
- WAIVER FROM MINIMUM AISLE WIDTH FOR A PARKING STALL WITH NO OVERHANG

SECTION V-C-1A - EARTH REMOVAL REGULATIONS
- WAIVER ALLOWING THE REMOVAL OF SOIL, LOAM, SAND, GRAVEL, ETC. TO BE REMOVED FROM A LOT.

ARTICLE 10 - PUBLIC WAYS AND COMMON LAND
- WAIVER TO HAVE THE ZONING BOARD OF APPEALS BE THE PERMIT ISSUING AUTHORITY INSTEAD OF THE BOARD OF SELECTMEN.

ARTICLE 10-34A
- WAIVER ALLOWING SOIL, LOAM, SAND, OR GRAVEL FROM LAND IN TOWN NOT IN PUBLIC USE TO ANY LOCATIONS OUTSIDE OF THE TOWN.

ARTICLE 22-5
- WAIVER FROM THE CONSERVATION COMMISSION HAVING THE AUTHORIZATION TO DENY THE PROJECT

ARTICLE 22-8
- WAIVER REQUESTED AS A BOND IS ALREADY REQUIRED OF THE APPLICANT AS PART OF THE 40B PROCESS.

ISSUED FOR DRAINAGE REPORT
JANUARY 10, 2016

PROFESSIONAL ENGINEER FOR
ALLEN & MAJOR ASSOCIATES, INC.

REV	DATE	DESCRIPTION
3.	01/04/2017	ISSUED FOR ZBA RESUBMITTAL
2.	11/2/2016	ISSUED FOR ZBA RESUBMITTAL
1.	10/25/2016	ISSUED FOR ZBA RESUBMITTAL

APPLICANT\OWNER:
BROADSTONE BARE COVE ALLIANCE, LLC. C/O
ALLIANCE RESIDENTIAL COMPANY
184 HIGH STREET, SUITE 401
BOSTON, MA 02110

PROJECT:
BROADSTONE BARE COVE
230 BEAL STREET
HINGHAM, MA

PROJECT NO.	2118-02	DATE:	08-12-2016
SCALE:	AS NOTED	DWG. NAME:	C2118-02
DESIGNED BY:	SJL	CHECKED BY:	CMQ

PREPARED BY:

ALLEN & MAJOR ASSOCIATES, INC.
civil & structural engineering ◆ land surveying
environmental consulting ◆ landscape architecture
www.allenmajor.com
100 COMMERCE WAY
P.O. BOX 2118
WOBURN MA 01888-0118
TEL: (781) 935-6889
FAX: (781) 935-2896
WOBURN, MA ◆ LAKEVILLE, MA ◆ MANCHESTER, NH

THIS DRAWING HAS BEEN PREPARED IN ELECTRONIC FORMAT. CLIENT/CLIENT'S REPRESENTATIVE OR CONSULTANT MAY BE PROVIDED COPIES OF DRAWINGS AND SPECIFICATIONS ON MAGNETIC MEDIA FOR HIS/HER INFORMATION AND USE FOR SPECIFIC APPLICATION TO THIS PROJECT. DUE TO THE POTENTIAL THAT THE MAGNETIC INFORMATION MAY BE MODIFIED UNINTENTIONALLY OR OTHERWISE, ALLEN & MAJOR ASSOCIATES, INC. MAY REMOVE ALL INDICATION OF THE DOCUMENT'S AUTHORSHIP ON THE MAGNETIC MEDIA. PRINTED REPRESENTATIONS OF THE DRAWINGS AND SPECIFICATIONS ISSUED SHALL BE THE ONLY RECORD COPIES OF ALLEN & MAJOR ASSOCIATES, INC.'S WORK PRODUCT.

DRAWING TITLE: DETAILS

SHEET No. D-9

Copyright©2017 Allen & Major Associates, Inc.
All Rights Reserved

N:\PROJECTS\2118-02\CIVIL\DRAWINGS\CURRENT\C-2118-02 - DETAILS.DWG