COMPREHENSIVE PERMIT APPLICATION PLANS

BROADSTONE BARE COVE

230 BEAL STREET

HINGHAM, MA

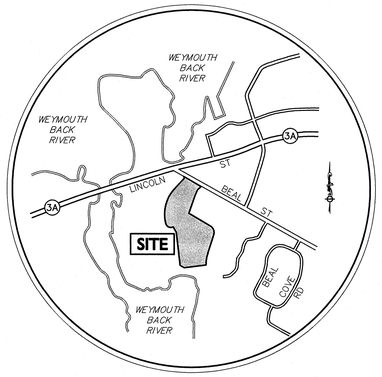

LOCUS MAP
NOT TO SCALE

OWNER/APPLICANT:
BROADSTONE BARE COVE ALLIANCE, LLC. C/O
ALLIANCE RESIDENTIAL COMPANY
184 HIGH STREET, SUITE 401
BOSTON, MA 02110

SITE ENGINEER:
ALLEN & MAJOR ASSOCIATES, INC.
100 COMMERCE WAY
WOBURN, MA 01888-0118

LAND SURVEYOR:
PRECISION LAND SURVEYING, INC.
32 TURNPIKE STREET
SOUTHBOROUGH, MA 01772

ARCHITECT:
CUBE 3 STUDIO
360 MERRIMACK STREET
BUILDING 5, FLOOR 3
LAWRENCE, MA 01843

LANDSCAPE ARCHITECT:
SHADLEY ASSOCIATES, P.C.
1730 MASSACHUSETTS AVENUE
LEXINGTON, MA 02420-5301

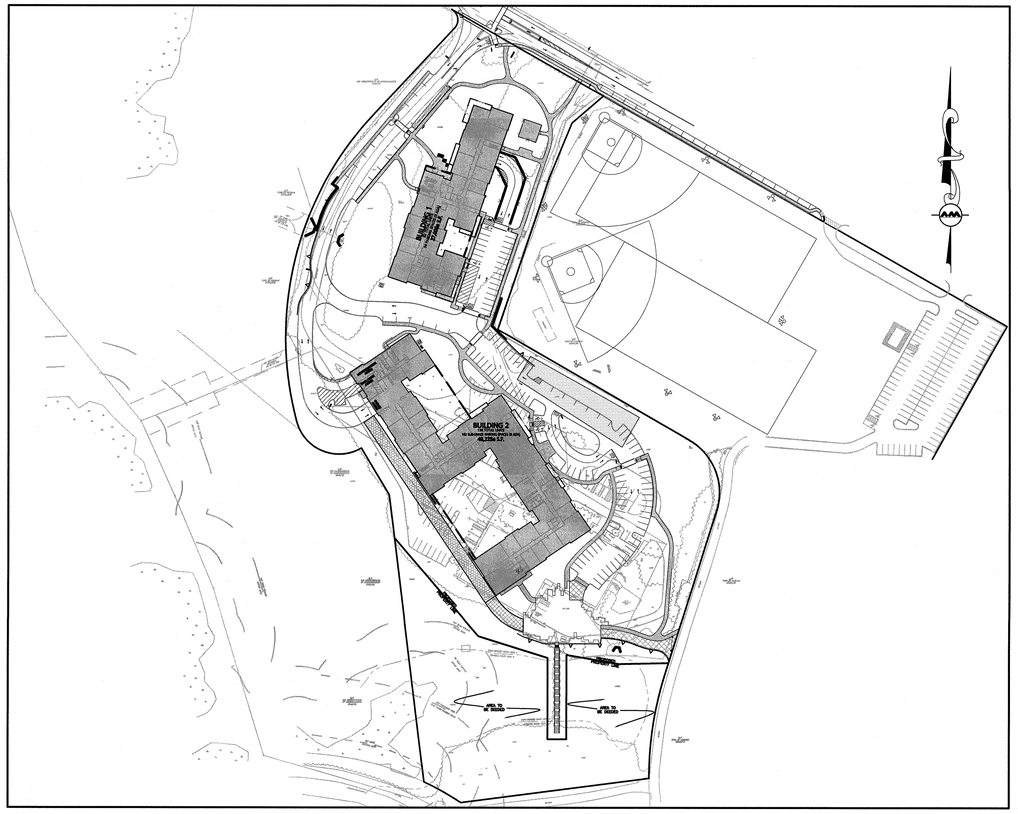

GRAPHIC SCALE
100 0 50 100 200 400
(IN FEET)
1 inch = 100 ft.

LIST OF DRAWINGS

DRAWING TITLE	SHEET NO.	ISSUED	REVISED
ABBREVIATIONS & NOTES	ABB-1 - ABB-3	08-12-2016	11-02-17
EXISTING CONDITIONS PLAN	1 - 5	01-18-2016	08-31-17
DEMOLITION PLAN	C-1	08-12-2016	11-02-17
LAYOUT & MATERIALS PLAN	C-2	08-12-2016	11-02-17
GRADING & DRAINAGE PLAN	C-3A	08-12-2016	11-02-17
SPOT GRADE PLANS	C-3B & C-3C	08-12-2016	11-02-17
UTILITY PLAN	C-4	08-12-2016	11-02-17
ELECTRICAL PLAN	C-5	08-12-2016	11-02-17
EROSION CONTROL PLAN	C-6	08-12-2016	11-02-17
SEWER PROFILES	P-1 & P-2	08-12-2016	11-02-17
DETAILS	D-1 - D-9	08-12-2016	11-02-17
OVERALL SITE PLAN	L-100	08-12-2016	11-02-17
PHOTOMETRICS PLAN	L-101	08-12-2016	11-02-17
BUILDING 1 LAYOUT & MATERIALS PLAN	L-200	08-12-2016	11-02-17
BUILDING 2 LAYOUT & MATERIALS PLAN	L-201	08-12-2016	11-02-17
BUILDING 1 PLANTING PLAN	L-300	08-12-2016	11-02-17
BUILDING 2 PLANTING PLAN	L-301	08-12-2016	11-02-17
BUILDING 2 SOUTH COURTYARD DETAILS	L-400	08-12-2016	11-02-17
AT-GRADE COURTYARD DETAILS	L-401	08-12-2016	11-02-17
BOARDWALK DETAILS	L-402	08-12-2016	11-02-17
SITE DETAILS 1-5	L-500 - L-504	08-12-2016	11-02-17
PLANTING DETAILS	L-505	08-12-2016	11-02-17
UNIT MIX & BUILDING SUMMARY	A-009	08-12-2016	11-02-17
AFFORDABLE UNIT MIX & DIAGRAMS	A-009.1	08-12-2016	11-02-17
SITE PLAN	A-080	08-12-2016	11-02-17
BUILDING 1 - GARAGE FLOOR PLAN	A1-100	08-12-2016	11-02-17
BUILDING 1 - FIRST FLOOR PLAN	A1-101	08-12-2016	11-02-17
BUILDING 1 - SECOND FLOOR PLAN	A1-102	08-12-2016	11-02-17
BUILDING 1 - THIRD FLOOR PLAN	A1-103	08-12-2016	11-02-17
BUILDING 1 - FOURTH FLOOR PLAN	A1-104	08-12-2016	11-02-17
BUILDING 2 - GARAGE FLOOR PLAN	A2-100	08-12-2016	11-02-17
BUILDING 2 - FIRST FLOOR PLAN	A2-101	08-12-2016	11-02-17
BUILDING 2 - SECOND FLOOR PLAN	A2-102	08-12-2016	11-02-17
BUILDING 2 - THIRD FLOOR PLAN	A2-103	08-12-2016	11-02-17
BUILDING 2 - FOURTH FLOOR PLAN	A2-104	08-12-2016	11-02-17
EXTERIOR ELEVATIONS	A1-200 & A2-200	08-12-2016	11-02-17
BUILDING 1 - SECTIONS	A1-300 & A1-301	08-12-2016	11-02-17
BUILDING 2 - SECTIONS	A2-300 & A2-301	08-12-2016	11-02-17
VERTICAL EXTERIOR DETAILS	A-525	08-12-2016	11-02-17

PREPARED BY:
ALLEN & MAJOR ASSOCIATES, INC.
civil & structural engineering ◆ land surveying
environmental consulting ◆ landscape architecture
www.allenmajor.com
100 COMMERCE WAY
WOBURN MA 01801-8501
TEL: (781) 935-6889
FAX: (781) 935-2896
WOBURN, MA ◆ LAKEVILLE, MA ◆ MANCHESTER, NH

Copyright©2017 Allen & Major Associates, Inc.
All Rights Reserved

COMMONWEALTH OF MASSACHUSETTS
TIMOTHY J. WILLIAMS
CIVIL
No. 43119
REGISTERED PROFESSIONAL ENGINEER
11/6/17

PROFESSIONAL ENGINEER FOR
ALLEN & MAJOR ASSOCIATES, INC.

ISSUED FOR COMPREHENSIVE PERMIT: AUGUST 12, 2016
ISSUED FOR ZBA RESUBMITTAL: OCTOBER 25, 2016
ISSUED FOR ZBA RESUBMITTAL: NOVEMBER 2, 2016
ISSUED FOR ZBA RESUBMITTAL: JANUARY 4, 2017
ISSUED FOR ZBA RESUBMITTAL: JANUARY 19, 2017
ISSUED FOR ZBA RESUBMITTAL: FEBRUARY 14, 2017
ISSUED FOR ZBA RESUBMITTAL: MARCH 29, 2017
ISSUED FOR ZBA RESUBMITTAL: APRIL 11, 2017

MODIFICATIONS TO PROJECT PLANS: NOVEMBER 2, 2017

N:\PROJECTS\2118-02\CIVIL\DRAWINGS\CURRENT\C-2118-02 - 30X42 COVER.DWG

GENERAL NOTES:

1. FOR EXISTING CONDITIONS SURVEY, SEE PLAN ENTITLED "EXISTING CONDITIONS PLAN", AS PREPARED BY PRECISION LAND SURVEYING, INC. THE ON THE GROUND SURVEY WAS PERFORMED ON JANUARY 6, 2016.
2. THE ELEVATIONS SHOWN ARE BASED ON THE NORTH AMERICAN VERTICAL DATUM OF 1988 (NAVD88), AND WERE DETERMINED BY GPS OBSERVATIONS AND AN OPUS REDUCTION ON DECEMBER 30, 2016.
3. THE SUBJECT PROPERTY IS LOCATED WITHIN THE OFFICE PARK ZONING DISTRICT, AS WELL AS THE FLOOD PLAIN AND WATERSHED PROTECTION DISTRICTS OF THE TOWN OF HINGHAM.
4. OVERALL LOT SIZE: 12.059± ACRES
5. THIS PROJECT WILL BE SERVED BY PUBLIC WATER AND SEWER, NATURAL GAS, TELEPHONE, CABLE AND ELECTRIC. ALL UTILITY LINES WILL BE INSTALLED UNDERGROUND UNLESS OTHERWISE NOTED.
6. THE CONTRACTOR IS SPECIFICALLY CAUTIONED THAT THE LOCATION AND/OR ELEVATION OF EXISTING UTILITIES AND STRUCTURES AS SHOWN ON THESE PLANS IS BASED ON RECORDS OF VARIOUS UTILITY COMPANIES AND WHERE POSSIBLE, MEASUREMENTS TAKEN IN THE FIELD. THIS INFORMATION IS NOT TO BE RELIED ON AS BEING EXACT OR COMPLETE. THE LOCATION OF ALL UNDERGROUND UTILITIES AND STRUCTURES SHALL BE VERIFIED IN THE FIELD BY THE CONTRACTOR PRIOR TO THE START OF CONSTRUCTION. THE CONTRACTOR MUST CONTACT THE APPROPRIATE UTILITY COMPANY, ANY GOVERNING PERMITTING AUTHORITY, AND "DIGSAFE" AT LEAST 72 HOURS PRIOR TO ANY EXCAVATION WORK TO REQUEST EXACT FIELD LOCATION OF UTILITIES AND THE ENGINEER SHALL BE NOTIFIED IN WRITING OF ANY UTILITIES INTERFERING WITH THE PROPOSED CONSTRUCTION AND APPROPRIATE REMEDIAL ACTION TAKEN BEFORE PROCEEDING WITH THE WORK. IT SHALL BE THE RESPONSIBILITY OF THE CONTRACTOR TO RELOCATE ALL EXISTING UTILITIES WHICH CONFLICT WITH THE PROPOSED IMPROVEMENTS SHOWN ON THE PLANS AT NO ADDITIONAL COST.
7. ALL MAIN BUILDING ENTRANCES AND WALKS SHALL BE ACCESSIBLE PER FEDERAL ADA & MA AAB REGULATIONS (SEE SPOT GRADE PLAN).
8. ALL SITE WORK DONE FOR THIS PROJECT SHALL BE IN STRICT ACCORDANCE WITH THE SITE PLANS AND SITE WORK SPECIFICATIONS FOR CONSTRUCTION.
9. ANY DAMAGE TO PRIVATE OR PUBLIC PROPERTIES DUE TO THE CONTRACTOR'S ACTIVITIES SHALL BE REPAIRED AND RESTORED BY THE CONTRACTOR AT THEIR OWN EXPENSE.
10. ALL PROPERTY MARKERS AND STREET LINE MONUMENTS SHALL BE PROPERLY PROTECTED DURING CONSTRUCTION. ANY DAMAGE TO THESE ITEMS SHALL BE REPAIRED AND RESTORED BY A SURVEYOR REGISTERED IN THE STATE OF MASSACHUSETTS AT THE CONTRACTOR'S EXPENSE.
11. ALL APPLICABLE PERMITS AND AN APPROVED SET OF PLANS SHALL BE AVAILABLE AT THE CONSTRUCTION SITE.
12. THE CONTRACTOR IS RESPONSIBLE FOR SCHEDULING A PRECONSTRUCTION MEETING THE WITH THE APPROPRIATE TOWN DEPARTMENTS, THE APPROPRIATE UTILITY COMPANIES, THE OWNER AND OWNER'S REPRESENTATIVE. THE MEETING SHALL TAKE PLACE PRIOR TO THE START OF CONSTRUCTION AND THE CONTRACTOR MUST PROVIDE 48 HOURS NOTICE TO ALL ATTENDEES PRIOR TO THE START OF THE MEETING.
13. APPROPRIATE WARNING SIGNS, MARKERS, BARRICADES, AND/OR FLAG MEN SHALL BE PROVIDED TO REGULATE TRAFFIC. CONSTRUCTION TRAFFIC CONTROLS SHALL BE IMPLEMENTED AND OPERATED ACCORDING TO THE MASS DEPARTMENT OF TRANSPORTATION (MASSDOT), THE MANUAL ON UNIFORM TRAFFIC CONTROL DEVICES (MUTCD), AND THE LOCAL AUTHORITY.
14. THE CONTRACTOR IS RESPONSIBLE FOR OBTAINING ADDITIONAL BENCHMARK INFORMATION IF REQUIRED. THE CONTRACTOR IS RESPONSIBLE FOR LOCATING AND PROTECTING ALL EXISTING BENCHMARKS. IF IT IS NECESSARY TO RELOCATE A BENCHMARK, IT SHALL BE RELOCATED BY A MASSACHUSETTS PROFESSIONAL LAND SURVEYOR AND DONE SO AT THE CONTRACTOR'S EXPENSE.
15. ALL BUILDING DIMENSIONS AND BUILDING OFFSET ARE MEASURED TO THE OUTSIDE FACE OF THE BUILDING. FOR EXACT BUILDING DIMENSIONS, SEE THE ARCHITECTURAL PLANS.
16. ALL RADII ARE 3 FEET UNLESS OTHERWISE NOTED.
17. ALL PARKING LOT AND AISLE DIMENSIONS ARE TAKEN FROM THE FACE OF CURB AND INDICATE EDGE OF PAVEMENT.
18. CONSTRUCTION DURING WET WEATHER OR WINTER CONDITIONS IS TO BE ANTICIPATED AND PROVISIONS TO ADEQUATELY ADDRESS THESE CONDITIONS SHALL BE THE RESPONSIBILITY OF THE CONTRACTOR AT NO ADDITIONAL COST.
19. THE CONTRACTOR IS RESPONSIBLE FOR OBTAINING AND PAYING FOR ANY PERMITS AND/OR CONNECTION FEES REQUIRED TO CARRY OUT THE WORK; INCLUDING, BUT NOT LIMITED TO, DEMOLITION.
20. DISPOSAL OF ALL DEMOLISHED MATERIALS, INCLUDING EXISTING MISC. CONSTRUCTION DEBRIS, IS THE RESPONSIBILITY OF THE CONTRACTOR AND MUST BE DISPOSED OF OFF-SITE IN ACCORDANCE WITH ALL FEDERAL, STATE, AND LOCAL MUNICIPAL REQUIREMENTS AT NO ADDITIONAL COST.
21. ALL DISTURBED AREAS NOT NOTED TO RECEIVE OTHER TREATMENT ARE TO RECEIVE SIX INCHES (6") MINIMUM OF TOPSOIL & SEED, AND SHALL BE MAINTAINED UNTIL ESTABLISHED & ACCEPTED.
22. EXISTING STRUCTURES WITHIN CONSTRUCTION LIMITS ARE TO BE PROTECTED, ABANDONED, REMOVED OR RELOCATED PER THE DEMOLITION PLAN (SHEET C-1).
23. CONTRACTOR SHALL BE RESPONSIBLE FOR ALL RELOCATIONS, INCLUDING BUT NOT LIMITED TO, UTILITIES, STORM DRAINAGE, SIGNS, & POLES, ETC. AS REQUIRED. ALL WORK SHALL BE IN ACCORDANCE WITH THE TOWN OF HINGHAM'S GOVERNING AUTHORITY'S SPECIFICATIONS AND SHALL BE APPROVED BY SUCH.
24. THE CONTRACTOR SHALL COORDINATE WITH ALL UTILITY COMPANIES TO DETERMINE EXACT POINT OF SERVICE CONNECTION AND DISCONNECTION AT EXISTING UTILITY.
25. THIS PROJECT WILL REQUIRE AN ON-SITE PRESENCE OF A TRIBAL CULTURAL RESOURCE MONITOR DURING GROUND DISTURBING ACTIVITIES. THE CONTRACTOR SHALL CONTACT THE COMPLIANCE REVIEW SUPERVISOR WITH THE CONSTRUCTION SCHEDULE. IN THE EVENT THAT ARCHEOLOGICAL RESOURCES OR HUMAN REMAINS ARE FOUND DURING ANY POINT OF CONSTRUCTION, THE CONTRACTOR MUST CEASE ALL CONSTRUCTION ACTIVITY AND NOTIFY THE TRIBAL HISTORIC PRESERVATION OFFICE.

GENERAL NOTES (CONTINUED):

25. EXISTING AND PROPOSED GAS SERVICE LOCATIONS ARE APPROXIMATE ONLY. THE CONTRACTOR SHALL CONFIRM WITH THE GAS COMPANY THAT THE GAS LINE INSTALLATION & DISCONNECTION SHALL BE BY THE LOCAL GAS COMPANY. THE CONTRACTOR SHALL GIVE THE GAS COMPANY ADVANCE NOTICE OF WHEN THE GAS LINE CAN BE INSTALLED.
26. EXISTING & PROPOSED ELECTRIC AND COMMUNICATIONS (TELEPHONE AND CABLE) SYSTEMS LOCATIONS ARE APPROXIMATE ONLY AND SHALL BE COORDINATED AND SCHEDULED WITH THE APPROPRIATE UTILITY COMPANY SERVICING THE PROJECT SITE.
27. CONTRACTOR IS RESPONSIBLE FOR DIGGING TEST HOLES AND VERIFYING ANY EXISTING UTILITY OR STRUCTURE PRIOR TO CONSTRUCTION. CONTRACTOR SHALL VERIFY THAT BASED ON EXACT LOCATION OF EXISTING UTILITIES, THERE ARE NO CONFLICTS BETWEEN THEM AND THE PROPOSED UTILITIES.
28. THE CONTRACTOR SHALL ADHERE TO ALL PERMIT CONDITIONS PROVIDED BY ALL GOVERNING AGENCIES AT NO ADDITIONAL COSTS. THIS INCLUDES, BUT IS NOT LIMITED TO, BUILDING PERMITS, DEMOLITION PERMITS, PLUMBING, GAS, AND ELECTRICAL PERMITS; PERMITS FROM THE PLANNING BOARD OR TOWN COUNCIL, AND AN ORDER OF CONDITIONS FROM THE HINGHAM ZONING BOARD OF APPEALS.
29. IT IS THE CONTRACTORS RESPONSIBILITY TO PROPERLY DISPOSE OF AND ABATE ALL BUILDING MATERIALS OR HAZARDOUS MATERIALS ONSITE IN ACCORDANCE WITH ALL STATE, FEDERAL, AND LOCAL LAWS AND REGULATIONS AT NO ADDITIONAL COST TO THE OWNER.
30. DURING EXCAVATION, ANY EXISTING EARTH CUT MATERIALS THAT DOES NOT MEET THE ORDINARY FILL SPECIFICATIONS OR LOAM SPECIFICATIONS AND CANNOT BE REUSED SHALL BE REMOVED OFFSITE BY THE CONTRACTOR AT NO ADDITIONAL COST TO THE OWNERS. MATERIAL WHICH DOES NOT MEET THE SPECIFICATION INCLUDES ALL BOULDERS, ROCKS, CONSTRUCTION DEBRIS, AND MISC. MATERIAL. PRIOR TO REUSE, CONTRACTOR TO PROVIDE TESTING REPORT OF SIEVE ANALYSIS TO ENGINEER FOR APPROVAL. CONTRACTOR CAN AND MATERIALS AND CONTINUE TO RETEST AS NECESSARY AT NO ADDITIONAL COST TO OWNER. AFTER AMENDING IF MATERIAL STILL DOES NOT MEET THE SPECIFICATIONS IT IS TO BE REMOVED FROM SITE AT NO ADDITIONAL COST TO THE OWNER AND IN ACCORDANCE WITH ALL FEDERAL, STATE, AND LOCAL LAWS AND REGULATIONS.
31. ANY PROPOSED SIGNAGE SHALL BE APPROVED BY SEPARATE APPLICATION TO THE DIRECTOR OF INSPECTIONAL SERVICES AND/OR THE APPROPRIATE MUNICIPAL AUTHORITY INCLUDING BUT NOT LIMITED TO THE ZONING BOARD OF APPEALS AND TOWN COUNCIL. ALL PROPOSED SIGNAGE MUST MEET THE REQUIREMENTS OF THE TOWN OF HINGHAM ZONING CODE.
32. THE CONTRACTOR SHALL REVIEW THE "LANDFILL COVER ASSESSMENT DATA REPORT," DATED OCTOBER 4, 2017 BY HALEY AND ALDRICH. SPECIAL PRECAUTIONS SHALL BE TAKEN TO ENSURE THIS AREA IS NOT DISTURBED DURING CONSTRUCTION.

GRADING & DRAINAGE NOTES:

1. EXISTING PAVEMENT SHALL BE SAW-CUT AND PAVEMENT JOINT SHALL BE INSTALLED WHERE NECESSARY TO ENSURE A SMOOTH CONTINUOUS GRADE.
2. THE ARCHITECTURAL PLANS SHALL BE REFERRED TO IN ORDER TO DETERMINE THE EXACT LOCATIONS OF VESTIBULE, SLOPED PAVING, EXIT PORCHES, HANDICAPPED RAMPS, TRUCK DOCKS, COMPACTOR PAD, ROOF DRAIN LATERALS, AND PRECISE BUILDING DIMENSIONS.
3. ALL GRADING OPERATIONS SHALL BE COORDINATED WITH THE APPROPRIATE UTILITY COMPANIES.
4. IN LANDSCAPED AREAS THE TOP ELEVATION OF MANHOLES SHALL MATCH THE FINISH GRADE OF THE TOPSOIL. IN PAVED AREAS THE TOP ELEVATIONS OF MANHOLES SHALL MATCH FINISH GRADE.
5. ALL AREAS DISTURBED DURING CONSTRUCTION SHALL BE STABILIZED AS SOON AS POSSIBLE UPON COMPLETION OF CONSTRUCTION WORK IN THE AREA.
6. TEMPORARY STRAW BALE AND/OR SILT SACK PROTECTION SHALL BE INSTALLED AND MAINTAINED AT EXISTING DRAINAGE STRUCTURES DURING CONSTRUCTION, TO PREVENT SEDIMENT LADEN RUNOFF FROM ENTERING THE DRAINAGE SYSTEM.
7. CONTRACTOR IS RESPONSIBLE FOR DEMOLITION OF EXISTING STRUCTURES INCLUDING REMOVAL OF ANY EXISTING UTILITIES SERVING THE STRUCTURE PER DEMOLITION PLAN.
8. ALL CATCH BASINS, MANHOLES, INFILTRATION SYSTEMS, AND WATER QUALITY STRUCTURES ARE TO BE CLEANED OUT TO REMOVE ALL CONSTRUCTION SILT AND DEBRIS, PRIOR TO FINAL APPROVAL.
9. IF ANY EXISTING UTILITY STRUCTURES TO REMAIN ARE DAMAGED DURING CONSTRUCTION IT SHALL BE THE CONTRACTOR'S RESPONSIBILITY TO REPAIR AND/OR REPLACE THE EXISTING STRUCTURE AS NECESSARY TO RETURN IT TO EXISTING CONDITIONS OR BETTER AT NO ADDITIONAL COST.
10. ALL STORM PIPE ENTERING STRUCTURES SHALL BE GROUTED TO ASSURE CONNECTION AT STRUCTURE IS WATERTIGHT.
11. ALL STORM DRAIN MANHOLES SHALL HAVE TRAFFIC BEARING RIMS & COVERS & SHALL BE LABELED "DRAIN."
12. THE CONTRACTOR SHALL ADHERE TO ALL TERMS & CONDITIONS AS OUTLINED IN THE GENERAL N.P.D.E.S. PERMIT FOR STORM WATER DISCHARGE ASSOCIATED WITH CONSTRUCTION ACTIVITIES.
13. CONTRACTOR SHALL ASSURE POSITIVE DRAINAGE AWAY FROM BUILDINGS FOR ALL NATURAL AND PAVED AREAS.
14. ALL UNSURFACED AREAS DISTURBED BY GRADING OPERATION SHALL RECEIVE SIX INCHES (6") OF TOPSOIL. CONTRACTOR SHALL SEED DISTURBED AREAS IN ACCORDANCE WITH LANDSCAPE & CIVIL SPECIFICATIONS & DRAWINGS UNTIL A HEALTHY STAND OF GRASS IS OBTAINED.
15. CONTRACTOR SHALL APPLY STABILIZATION FABRIC TO ALL SLOPES STEEPER THAN 3H:1V.
16. ALL DRAINAGE SYSTEM COMPONENTS SHALL CONFORM TO LOCAL REQUIREMENTS.

UTILITY NOTES:

1. THE LATEST STANDARDS OF THE TOWN OF HINGHAM SHALL BE FOLLOWED WHEN INSTALLING ANY SANITARY SEWER AND STORM DRAIN WORK. BOTH SEWER AND STORM DRAIN WORK WILL BE INSPECTED BY TOWN OF HINGHAM PERSONNEL AND ALL COSTS SHALL BE THE RESPONSIBILITY OF THE CONTRACTOR.
2. THE LATEST STANDARDS OF THE AQUARION WATER COMPANY SHALL BE FOLLOWED WHEN INSTALLING ANY WATER LINE WORK. WATER LINE WORK WILL BE INSPECTED BY THE AQUARION WATER COMPANY PERSONNEL AND ALL COSTS SHALL INCLUDE PRESSURE TESTING, DISINFECTING, AND FLUSHING OF LINES. INSPECTION COSTS SHALL BE THE RESPONSIBILITY OF THE CONTRACTOR. THE CONTRACTOR SHALL BE RESPONSIBLE FOR INSTALLATION AND REMOVAL OF ALL NECESSARY DISINFECTING AND FLUSHING TAPS AS DIRECTED BY THE TOWN.
3. THE CONTRACTOR SHALL REFER TO ARCHITECTURAL & PLUMBING DRAWINGS AND SPECIFICATIONS FOR ACTUAL LOCATION OF ALL ROOF DRAIN LATERALS AND UTILITY ENTRANCES TO INCLUDE SANITARY SEWER LATERALS, DOMESTIC AND FIRE PROTECTION WATER SERVICE, ELECTRIC, TELEPHONE, AND NATURAL GAS SERVICE. THE CONTRACTOR SHALL COORDINATE INSTALLATION OF UTILITIES IN SUCH A MANNER AS TO AVOID CONFLICTS AND COORDINATE WITH THE PROPER AGENCY THE LOCATION AND SCHEDULING OF CONNECTIONS WITH THEIR FACILITIES.
4. WHERE AN EXISTING UTILITY IS FOUND TO CONFLICT WITH THE PROPOSED WORK, THE LOCATION, ELEVATION AND SIZE OF THE UTILITY SHALL BE ACCURATELY DETERMINED WITHOUT DELAY BY THE CONTRACTOR, AND THE INFORMATION FURNISHED TO THE ENGINEER FOR RESOLUTION.
5. ABANDONED EXISTING UTILITIES AND UTILITIES TO BE ABANDONED SHALL EITHER BE ABANDONED IN PLACE AS NOTED OR SHALL BE REMOVED AND DISPOSED OF AS SPECIFIED. ANY UTILITIES 4" OR LARGER ARE TO BE REMOVED. ALL UTILITIES SCHEDULED FOR ABANDONMENT OR REMOVAL AND DISPOSAL MUST BE COORDINATED BY THE CONTRACTOR WITH THE RESPECTIVE UTILITY OWNER. WHEN ABANDONED UTILITIES ARE TO BE LEFT IN PLACE, PLUG OR CAP THE ENDS OF THE CONDUITS AND PIPES. REMOVE ABANDONED UTILITY MANHOLES, JUNCTION BOXES AND SIMILAR STRUCTURES TO A MINIMUM DEPTH OF 4 FEET BELOW FINISHED GRADE AND PUNCTURE OR BREAK THE BOTTOM SLABS OF MANHOLES AND SIMILAR STRUCTURE TO ALLOW DRAINAGE. BACKFILL AND COMPACT EXCAVATIONS RESULTING FROM REMOVAL OF UTILITY FACILITATES, AS REQUIRED TO RESTORE THE ORIGINAL GRADE.
6. THE CONTRACTOR SHALL MAKE ARRANGEMENTS FOR THE ALTERATION AND ADJUSTMENTS OF NATURAL GAS, ELECTRIC, TELEPHONE AND ANY OTHER UTILITY BY THE UTILITY OWNER.
7. THE CONTRACTOR SHALL USE THE FOLLOWING PIPE MATERIALS:
   - SEWER – PVC (POLYVINYL CHLORIDE), SDR 35
     – C.I. (CAST IRON)
   - DRAIN – HDPE (HIGH DENSITY CORRUGATED POLYETHYLENE PIPE WITH SMOOTH INNER WALL), ASTM D2321 (UNLESS OTHERWISE SPECIFIED ON PLAN)
   - WATER – C.L.D.I. (CEMENT LINED DUCTILE IRON)
8. REFER TO DEMOLITION PLAN FOR EXISTING DRAINAGE STRUCTURES TO BE REMOVED AND UTILITY ABANDONMENT.
9. BEFORE UTILITY WORK BEGINS, THE CONTRACTOR WILL COORDINATE THE APPROPRIATE PERMIT AND INSPECTION FEES WITH THE TOWN OF HINGHAM.
10. ALL WATER GATES TO PROPOSED HYDRANTS ARE 6" DIAMETER UNLESS NOTED.
11. A MINIMUM OF 10 FEET CLEAR HORIZONTALLY SHALL BE MAINTAINED BETWEEN WATER MAINS AND SANITARY SEWER MAINS AND/OR STORM DRAINS. WHENEVER CONDITIONS PREVENT A LATERAL SEPARATION OF 10 FEET TO A WATER MAIN, THE WATER MAIN SHALL BE LAID IN A SEPARATE TRENCH AND THE DIFFERENCE IN ELEVATION BETWEEN THE WATER MAIN AND THE SEWER MAIN SHALL BE AT LEAST 18 INCHES.
12. ALL FILL MATERIAL IS TO BE IN PLACE, AND COMPACTED BEFORE INSTALLATION OF PROPOSED UTILITIES.
13. CONTRACTOR SHALL NOTIFY THE UTILITY AUTHORITY'S INSPECTORS 72 HOURS BEFORE CONNECTING TO ANY EXISTING LINE.
14. MINIMUM TRENCH WIDTH SHALL BE 2 FEET.
15. CONTRACTOR SHALL MAINTAIN A MINIMUM OF 5'-0" COVER ON ALL WATERLINES AND A MAXIMUM OF 8'-0" COVER.
16. IN THE EVENT OF A VERTICAL CONFLICT BETWEEN WATERLINES, SANITARY LINES, STORM LINES AND GAS LINES (EXISTING AND PROPOSED), THE SANITARY LINE SHALL BE DUCTILE IRON PIPE WITH MECHANICAL JOINTS AT LEAST 10 FEET ON BOTH SIDES OF CROSSING, THE WATERLINE SHALL HAVE MECHANICAL JOINTS WITH APPROPRIATE THRUST BLOCKING AS REQUIRED TO PROVIDE A MINIMUM OF 18" CLEARANCE BETWEEN THE PIPES. WHERE THE WATERLINE IS LESS THAN THE 18" VERTICAL CLEARANCE AND MEETING 10' HORIZONTAL CLEARANCE CANNOT BE MET, THE WATER MUST BE ENCASED IN CONCRETE TO MEET THE REQUIREMENTS OF ANSI A21.10 OR ANSI 21.11 (AWWA C-151) (CLASS 50).
17. ALL CONCRETE FOR ENCASEMENTS SHALL HAVE A MINIMUM 28 DAY COMPRESSION STRENGTH OF 3000 P.S.I.
18. CONTRACTOR IS RESPONSIBLE FOR COMPLYING WITH THE SPECIFICATIONS OF THE LOCAL AUTHORITIES WITH REGARDS TO MATERIALS AND INSTALLATION OF THE WATER, SEWER, GAS AND ELECTRICAL AND TELECOMMUNICATIONS LINES.
19. ALL NECESSARY INSPECTIONS AND/OR CERTIFICATIONS REQUIRED BY CODES AND/OR UTILITY SERVICE COMPANIES SHALL BE PERFORMED PRIOR TO ANNOUNCED BUILDING POSSESSION AND THE FINAL CONNECTION OF SERVICE.
20. ALL HYDRANTS SHALL MEET THE AQUARION WATER COMPANY REQUIREMENTS AND SHALL BE INSTALLED IN ACCORDANCE WITH THE AQUARION WATER COMPANY'S STANDARDS.
21. DOMESTIC WATER SERVICES SHALL BE INSTALLED WITH APPROPRIATELY SIZED GATE, BOX, AND TEE FITTINGS.
22. ALL WATER MAIN APPURTENANCES, MATERIALS, METHODS OF INSTALLATION AND TESTING REQUIREMENTS SHALL MEET OR EXCEED THE AQUARION WATER COMPANY REQUIREMENTS.
23. PRESSURE AND LEAKAGE TEST, DISINFECTION AND FLUSHING SHALL BE IN ACCORDANCE WITH ALL AQUARION WATER COMPANY STANDARDS AND REQUIREMENTS.
24. CONTRACTOR SHALL BE RESPONSIBLE FOR ALL COSTS IN CONNECTION WITH THE UTILITY TESTS, FLUSHING AND INSPECTIONS AS REQUIRED BY THE LOCAL MUNICIPALITY AND THE AQUARION WATER COMPANY.
25. SEWER PIPE BEDDING MATERIAL SHALL BE AS SPECIFIED ON THE DRAWINGS. IF LOCAL OR STATE AUTHORITIES REQUIRE DIFFERENT BEDDING OR BACKFILL MATERIAL, THEN THE MORE STRINGENT SHALL APPLY.
26. DRAWINGS DO NOT NECESSARILY SHOW ALL EXISTING UTILITIES.

UTILITY NOTES (CONTINUED):

27. ALL WATER SYSTEM MATERIALS SHALL BE AS PER AQUARION WATER COMPANY SPECIFICATIONS (LATEST VERSION).
    a. WATER MAINS TO BE DUCTILE IRON PIPE, CLASS 52, CONFORMING TO AWWA C150 AND AWWA C151, PUSH-ON TYPE JOINTS WITH GASKETS CONFORMING TO AWWA C111, DOUBLE CEMENT-LINED INSIDE CONFORMING TO AWWA C104, AND ASPHALT SEAL COATED OUTSIDE (COAL TAR COATED CONFORMING TO AWWA 203 IN AREAS WHERE GROUNDWATER LEVELS ARE ABOVE THE PIPE LAYING DEPTH). ALL PIPE FITTINGS SHALL BE DUCTILE IRON, CLASS 350 MECHANICAL JOINT CONFORMING TO AWWA C153. ALL FITTINGS SHALL BE RESTRAINED WITH SERIES 1100 MEGALUG AS MANUFACTURED BY EBAA IRON, OR APPROVED EQUAL.
    b. ALL GATE VALVES SHALL BE RESILIENT WEDGE SEATED VALVES CONFORMING TO AWWA C509 (MUELLER CO 2360 SERIES OR APPROVED EQUAL). VALVES SHALL HAVE CORROSION RESISTANT FUSION-BONDED INTERIOR AND EXTERIOR COATINGS. VALVES ARE TO HAVE DOUBLE O-RING SEALS, A NON-RISING STEM, 2-INCH OPERATING NUT, AND BE OPEN RIGHT (CLOCKWISE TO OPEN). AN ARROW INDICATING THE OPENING POSITION SHALL BE CAST INTO THE OPERATING NUT.
    c. VALVE BOXES SHALL BE CAST IRON, ASPHALT COATED, SLIDE TYPE, ADJUSTABLE, TOGETHER WITH CAST IRON COVERS WITH THE WORD "WATER" PLAINLY CAST IN RELIEF ON THE TOP SURFACE. A MINIMUM 6 INCH OVERLAP IS REQUIRED BETWEEN SLIDING SECTIONS. THE INSIDE DIAMETER OF THE BOTTOM SECTION SHALL BE AT LEAST 5-1/4 INCHES AND SHALL HAVE A BELLED BASE. THE TOP SECTION SHALL BE AT LEAST 6-1/8 INCHES AND HAVE TOP FLANGES. THE BOTTOM SECTION SHALL BE AT LEAST 36-INCHES IN LENGTH. THE TOP SECTION SHALL BE AT LEAST 26 INCHES IN LENGTH AND HAVE A PLAIN BOTTOM.
    d. TAPPING SLEEVES AND VALVES SHALL HAVE RESILIENT WEDGE GATE VALVES AS SPECIFIED ABOVE WITH THE FOLLOWING EXCEPTIONS. TAPPING SLEEVE SHALL BE MUELLER CO. STAINLESS STEEL TAPPING SLEEVE MODEL H-304SS. SLEEVES SHALL MEET ANSI/NSF 61 STANDARDS. SLEEVE OUTLET SHALL HAVE A ¾" TESTING PORT WITH A ¾" NPT BRASS TEST PLUG. TAPPING VALVES SHALL BE FULL PORT OPENING AND ABOVE SPECIFIED.
    e. HYDRANTS SHALL BE MUELLER SUPER CENTURION A-423, CONFORMING TO AWWA C502 (DRY BARREL HYDRANTS) AND PAINTED RED. FIRE HYDRANTS SHALL HAVE MECHANICAL JOINT SHOES, 5'-6" BURY (STREET LEVEL SHOULDER AREAS) OR 6'-0" BURY (RAISED SIDEWALK) AND MARKED WITH AN ARROW AND THE WORD "OPEN" TO INDICATE THE DIRECTION TO TURN THE STEM TO OPEN THE HYDRANT. HYDRANTS SHALL OPEN RIGHT (CLOCKWISE OPEN).
28. DUCTILE IRON PIPE AND FITTINGS SHALL BE INSTALLED AND TESTED IN ACCORDANCE WITH REQUIREMENTS OF AWWA C600, LATEST EDITION. WATER MAINS SHALL HAVE A MINIMUM OF FIVE FEET OF COVER. PRESSURE TESTING SHALL CONSIST OF 200 PSI FOR 10 MINUTES AND 150 PSI FOR 2 HOURS.
29. THE MINIMUM VERTICAL AND HORIZONTAL SEPARATION MUST BE MAINTAINED FOR ALL WATER LINES AND OTHER UTILITIES: 18-INCHES VERTICAL (WATER LINE 18-INCHES ABOVE) AND 10 FEET HORIZONTAL.
30. AT NO TIME SHALL A WATER MAIN OR SERVICE BE INSTALLED GREATER THAN 8-FEET BELOW FINISHED GRADE.
31. WATER MAINS INSTALLED BELOW CONCRETE PADS AND CONCRETE SIDEWALKS AND/OR LANDSCAPED ISLANDS SHALL BE AVOIDED WHENEVER POSSIBLE.
32. A FIRE SERVICE APPLICATION IS REQUIRED FOR THE PROPOSED FIRE SERVICE. THE PROPOSED BACKFLOW PREVENTER MUST BE SUBMITTED TO AQUARION WATER COMPANY FOR REVIEW AND APPROVAL.
33. A WATER BALANCE PLAN APPLICATION SHALL BE REVIEWED AND APPROVED BY AQUARION WATER COMPANY BEFORE ANY NEW CONNECTIONS TO THE WATER SYSTEM ARE ALLOWED.

COMMONWEALTH OF MASSACHUSETTS
TIMOTHY J. WILLIAMS
CIVIL
No. 43119
REGISTERED PROFESSIONAL ENGINEER
11/2/17

PROFESSIONAL ENGINEER FOR
ALLEN & MAJOR ASSOCIATES, INC.

CUBE 3
architecture interiors planning
308 Merrimack Street Lawrence MA 01843
phone: 978.989.9900 www.cube3studio.com

project information:

BROADSTONE
BARE COVE
HINGHAM
230 BEAL ST.
HINGHAM, MA

client information:

Broadstone Bare
Cove Alliance, LLC.

C/O Alliance
Residential Company
184 High Street Suite
401 Boston, MA 02110

consultant information:

PREPARED BY:
ALLEN & MAJOR
ASSOCIATES, INC.
civil & structural engineering • land surveying
environmental consulting• landscape architecture
www.allenmajor.com
100 COMMERCE WAY
WOBURN, MA 01801
TEL: (781) 935-6889
FAX: (781) 935-2896

WOBURN, MA • LAKEVILLE, MA • MANCHESTER, NH

issuance:

COMPREHENSIVE
PERMIT
APPLICATION PLANS
NOT FOR
CONSTRUCTION

drawing information:

drawing by:	SJL
drawing checked by:	CMQ
drawing scale:	1"=40'
drawing date:	12 AUGUST 2017
project number:	2118-02

drawing revisions:

No.	Description	Date
1	Issued for ZBA Resubmittal	10/25/16
2	Issued for ZBA Resubmittal	11/02/16
3	Issued for ZBA Resubmittal	01/04/17
4	Issued for ZBA Resubmittal	01/19/17
5	Issued for ZBA Resubmittal	02/14/17
6	Issued for ZBA Resubmittal	03/29/17
7	Issued for ZBA Resubmittal	04/11/17
8	Modifications to Project Plans	11/02/17

registration:

drawing name:

ABBREVIATIONS
& NOTES

drawing number:

ABB-1

N:\PROJECTS\2118-02\CIVIL\DRAWINGS\CURRENT\C-2118-02 – ABBREVIATIONS & NOTES.DWG

COPYRIGHT (C) 2017 CUBE 3 STUDIO LLC, ALL RIGHTS RESERVED

EROSION & SEDIMENTATION CONTROL NOTES:

1. EROSION CONTROL SHALL BE INSTALLED PRIOR TO CONSTRUCTION AND SHALL BE ADEQUATE TO MAINTAIN SEDIMENT ON SITE. ANY MODIFICATIONS TO SILT CONTROLS SHOWN ON THE APPROVED PLANS AS A RESULT OF ACTUAL FIELD CONDITIONS OR CONSTRUCTION PRACTICES SHALL BE INSTALLED IN ACCORDANCE WITH B.M.P. (BEST MANAGEMENT PRACTICES) PER THE E.P.A. 2008 "CONSTRUCTION GENERAL PERMIT" MANUAL, AND MASSACHUSETTS 2003 EROSION & SEDIMENT CONTROL GUIDELINES FOR URBAN AND SUBURBAN AREAS, ANY SUCH MODIFICATIONS FROM THE ABOVE MANUALS SHALL BE INSTALLED AS APPROVED BY THE ENGINEER OR THE TOWN OF HINGHAM.

2. AREAS OF EXPOSED SOIL UNDERGOING CONSTRUCTION THAT WILL NOT BE COVERED AND OR FINISHED GRADED SHALL BE STABILIZED AS SOON AS PRACTICABLE BUT IN NO CASE MORE THAN 14 DAYS AFTER THE CONSTRUCTION ACTIVITY (UNLESS TOWN HAS STRICTER REQUIREMENTS WHICH SHALL BE FOLLOWED) IN THAT PORTION OF THE SITE HAS TEMPORARILY OR PERMANENTLY CEASED. TEMPORARY EROSION CONTROL MEASURES SHALL INCLUDE EROSION CONTROL MESH, NETTING OR MULCH AS DIRECTED BY THE OWNER'S REPRESENTATIVE AND SHOWN ON THE DESIGN PLANS. IF MULCH IS USED, STRAW MULCH SHALL BE APPLIED AT THE RATE OF 4 BALES PER 1,000 SQUARE FEET. APPLICATION AREA SHALL BE SUFFICIENTLY COVERED WITH MULCH TO AVOID ANY VISIBLE SOIL EXPOSURE. MULCH SHALL BE KEPT MOIST TO AVOID LOSS DUE TO WIND. MULCH AND NETTING SHALL BE APPLIED IN THE BASE OF ALL GRASSED WATERWAYS, IN VEGETATIVE SLOPES WHICH EXCEED 15% AND DISTURBED AREAS WITHIN 100 FEET OF WETLANDS OR STREAMS.

3. IF DISTURBED AREAS DO NOT RECEIVE FINAL SEEDING BY OCTOBER 1ST OF THE CONSTRUCTION YEAR, THEN ALL DISTURBED AREAS SHALL BE SEEDED WITH A WINTER COVER CROP AT THE RATE OF 3 LBS PER 1,000 SQUARE FEET. WINTER SEEDING SHALL BE COVERED WITH EROSION CONTROL MESH (MULCH AND NETTING). HEAVY GRADE MATS SHALL BE USED IN THE BASE OF ALL GRASSED WATERWAYS ON VEGETATED SLOPES IN EXCESS OF 15%, AND ANY DISTURBED AREAS WITHIN 100 FEET OF WETLANDS OR STREAMS. MULCH AND NETTING SHALL ALSO BE PROVIDED FOR ADDITIONAL WINTER PROTECTION.

4. ALL TOPSOIL SHALL BE COLLECTED, STOCKPILED, SEEDED WITH RYE AT 3LBS PER 1,000 SQUARE FOOT AND MULCHED, AND REUSED AS REQUIRED. SILTATION FENCING SHALL BE PLACED DOWN GRADIENT FROM STOCKPILED LOAM. LOAM SHALL BE STOCKPILED AT LOCATIONS DESIGNATED BY THE OWNER AND ENGINEER.

5. ALL FILTER BARRIERS, SILT SACKS, AND EROSION CONTROL BERMS SHALL BE INSTALLED ACCORDING TO THE EROSION CONTROL PLAN. THESE SHALL BE MAINTAINED DURING DEVELOPMENT TO REMOVE SEDIMENT FROM RUNOFF WATER. ALL THE FILTER BARRIERS AND EROSION CONTROL BERMS SHALL BE INSPECTED AFTER ANY RAINFALL OR RUNOFF EVENT, MAINTAINED AND CLEANED UNTIL ALL AREAS HAVE AT LEAST 85-90% VIGOROUS PERENNIAL COVER OF GRASSES.

6. ADJACENT ROADS SHALL BE PERIODICALLY SWEPT OR WASHED TO AVOID TRACKING MUD, DUST OR DEBRIS FROM THE CONSTRUCTION AREA AS OFTEN AS NECESSARY (WHICH COULD BE ON A DAILY BASIS) TO REMOVE ANY SOIL OR SEDIMENTS AT NO ADDITIONAL COST TO THE OWNER. A WATERING TRUCK WILL BE USED TO PERIODICALLY SPRINKLE CONSTRUCTION AREAS IN ORDER TO KEEP THE LEVEL OF DUST TO A MINIMUM DURING THE DRY MONTHS AT NO ADDITIONAL COST TO THE OWNER.

7. THE CONTRACTOR SHALL USE EXTREME CAUTION TO AVOID ALLOWING SEDIMENTS TO ENTER THE STORM DRAIN SYSTEM DURING CONSTRUCTION. BOTH EXISTING AND PROPOSED CATCH BASIN INLETS SHALL BE PROTECTED DURING CONSTRUCTION BY THE USE SILT SACKS AND OR STRAW BALE BARRIERS AROUND EACH INLET AS NOTED ON THE PLANS. INLET PROTECTION MAY BE REMOVED ONLY AFTER FINISHED AREAS ARE PAVED AND THE VEGETATED SLOPES ARE ESTABLISHED WITH AT LEAST 85-90% OF VIGOROUS PERENNIAL GROWTH.

8. AS APPLICABLE, EROSION CONTROL MESH SHALL BE APPLIED IN ACCORDANCE WITH THE PLANS OVER ALL FINISHED SEEDED AREAS AS SPECIFIED ON THE DESIGN PLANS.

9. AT A MINIMUM, ALL STRAW BALES, SILT FENCE AND FILTER FABRIC SHALL REMAIN IN PLACE UNTIL SEEDINGS OR PLANTINGS HAVE BECOME 85-90% ESTABLISHED. THE TOWN OF HINGHAM OR THE ENGINEER MUST APPROVE THE REMOVAL OR RELOCATION OF ANY OF THE STRAW BALES AND FILTER FABRIC. ONCE THE STRAWBALES AND SILT FENCE IS REMOVED THE AREAS ARE TO BE LOAM AND SEEDED TO ACHIEVE FULL STABILIZATION.

10. AT THE OWNER'S DISCRETION ADDITIONAL EROSION CONTROL MEASURES MAY BE REQUIRED TO MAINTAIN STABILITY OF EARTHWORKS AND FINISHED GRADED AREAS. THE CONTRACTOR, AT HIS EXPENSE, WILL BE RESPONSIBLE FOR PROVIDING AND INSTALLING ANY ADDITIONAL MEASURES AS SPECIFIED BY THE OWNER. THIS INCLUDES BUT IS NOT LIMITED TO REQUESTS BY MA DEP. THE ENGINEER AND THE MUNICIPALITY, AS AUTHORIZED BY THE OWNER. FAILURE TO COMPLY WITH THE OWNER'S DIRECTIONS WILL RESULT IN DISCONTINUATION OF CONSTRUCTION ACTIVITIES.

11. INSPECTIONS AND MONITORING MAINTENANCE MEASURES SHALL BE APPLIED AS NEEDED DURING THE ENTIRE CONSTRUCTION CYCLE. WEEKLY INSPECTIONS SHALL BE HELD THROUGH THE DURATION OF CONSTRUCTION ACTIVITY. WEEKLY INSPECTION REPORTS SHALL BE MAINTAINED BY THE CONTRACTOR AND LOCATED IN THE CONTRACTORS FIELD OFFICE ONSITE. IN ADDITION TO THE NORMAL WEEKLY INSPECTIONS, THE CONTRACTOR SHALL PERFORM AN INSPECTION OF ALL EROSION CONTROL MEASURES AFTER EACH RAINFALL OR RUNOFF EVENT, AND PERFORM THE NECESSARY REPAIRS. THE INSPECTIONS SHALL INCLUDE BUT NOT BE LIMITED TO THE SITE'S DOWN STREAM DISCHARGE POINTS.

12. IF ANY EVIDENCE OF SEDIMENTATION IS OBSERVED AT THE STORMWATER MANAGEMENT AREA INLETS, THE CONTRACTOR SHALL, AT HIS OWN EXPENSE, PROVIDE A PLAN TO THE ENGINEER TO REMOVE ANY ACCUMULATED SEDIMENT IN THESE AREAS. THE CONTRACTOR SHALL ALSO IMMEDIATELY PROVIDE ADDITIONAL ON SITE EROSION AND SEDIMENTATION CONTROL MEASURES TO PREVENT FURTHER DEGRADATION OF THE AREA.

13. FOLLOWING THE TEMPORARY OR FINAL SEEDINGS, THE CONTRACTOR SHALL INSPECT THE WORK AREA SEMI-MONTHLY TO ENSURE THE AREAS HAVE A MINIMUM OF 85-90% VEGETATED VIGOROUS GROWTH. RE-SEEDING SHALL BE CARRIED OUT BY THE CONTRACTOR WITH FOLLOW UP INSPECTIONS IN THE EVENT OF ANY FAILURES UNTIL VEGETATION IS ADEQUATELY ESTABLISHED.

14. CONTRACTOR & ALL SITE SUBCONTRACTORS SHALL BE FAMILIAR WITH & FOLLOW ALL APPROVED PERMITS AND CONDITIONS. CONTRACTOR SHALL MAINTAIN A COPY OF ALL APPROVED PERMITS ONSITE, INCLUDING THE ORDER OF CONDITIONS FROM THE HINGHAM ZONING BOARD OF APPEALS. ALL CONDITIONS & RECOMMENDATIONS WITHIN THE APPROVED PERMITS SHALL BE COMPLETED.

16. EROSION AND SEDIMENTATION CONTROL MEASURES SHALL BE MAINTAINED DURING CONSTRUCTION, AND SHALL REMAIN IN PLACE UNTIL ALL SITE WORK IS COMPLETE AND GROUND COVER IS ESTABLISHED.

17. TOP OF STOCKPILES SHALL BE COVERED IN SUCH MANNER THAT STORMWATER DOES NOT INFILTRATE THE MATERIALS AND THEREBY RENDER THE SAME UNSUITABLE FOR FILL USE.

EROSION & SEDIMENTATION CONTROL NOTES (CONTINUED):

18. ALL DISTURBED OR EXPOSED AREAS SUBJECT TO EROSION SHALL BE STABILIZED WITH MULCH OR SEEDED FOR TEMPORARY VEGETATIVE COVER. NO AREA, SUBJECT TO EROSION SHALL BE LEFT DISTURBED AND UNSTABILIZED FOR PERIODS LONGER THAN IS ABSOLUTELY NECESSARY TO CARRY OUT THAT PORTION OF THE CONSTRUCTION WORK OR SIX MONTHS AFTER SOIL HAS BEEN DISTURBED WHICHEVER IS LESS.

19. CULVERT/PIPE INLETS AND OUTFALLS SHALL BE PROTECTED BY STRAW BALE FILTERS AND STONE CHECK DAMS UNTIL DISTURBED AREAS ARE PERMANENTLY STABILIZED.

20. STRAW BALE DIKES SHALL BE CONSTRUCTED AT ALL EXISTING & PROPOSED CATCH BASINS. NO SEDIMENTATION SHALL ENTER THE ON-SITE OR OFF-SITE DRAINAGE SYSTEMS AT ANY TIME.

21. ALL EROSION CONTROL MEASURES SHALL BE ROUTINELY INSPECTED, CLEANED AND REPAIRED OR REPLACED AS NECESSARY THROUGHOUT ALL PHASES OF CONSTRUCTION. IN ADDITION, INSPECTION SHALL TAKE PLACE WEEKLY AND BEFORE AND AFTER EACH RAINFALL EVENT.

22. ALL PROPOSED SLOPES STEEPER THAN 3:1 SHALL BE STABILIZED WITH JUTE MESH (OR EQUAL) AND PROTECTED FROM EROSION UNTIL WORK IS COMPLETE AND GROUND COVER IS ESTABLISHED.

23. THE CONTRACTOR SHALL KEEP ON SITE AT ALL TIMES ADDITIONAL STRAW BALES AND EXTRA SILTATION FENCING FOR INSTALLATION AT THE DIRECTION OF THE ENGINEER OR THE TOWN ENGINEER TO MITIGATE ANY EMERGENCY CONDITION.

24. AS CONSTRUCTION DISTURBANCE IS GREATER THAN 1 ACRE, A NATIONAL POLLUTANT DISCHARGE ELIMINATION SYSTEM (NPDES) CONSTRUCTION GENERAL PERMIT NOI, AND STORM WATER POLLUTION PREVENTION PLAN (SWPPP) WILL NEED TO BE SUBMITTED TO THE EPA. THE NPDES PERMIT FOR STORM WATER DISCHARGE, & CONSTRUCTION GENERAL PERMIT NOI WILL BE REQUIRED TO BE SUBMITTED AT LEAST 14 DAYS PRIOR TO COMMENCING CONSTRUCTION BY THE CONTRACTOR.

25. OWNER AND CONTRACTOR ARE RESPONSIBLE FOR COMPLIANCE WITH THE CONSTRUCTION GENERAL PERMIT NOI. WEEKLY SWPPP INSPECTION REPORTS TO BE PERFORMED BY CONTRACTOR. COPIES OF ALL SWPPP INSPECTION REPORTS SHALL BE PROVIDED TO THE TOWN OF HINGHAM, EPA, DEP, OR ANY OTHER AUTHORITY REQUESTING WITHIN 3 DAYS OF EACH INSPECTION.

26. APPLICABLE WORK AND MATERIALS SHALL COMPLY WITH ALL TOWN OF HINGHAM, MA DEP, EPA CONSTRUCTION GENERAL PERMIT STANDARDS. ALL CONSTRUCTION SHALL CONFORM TO THE APPLICABLE SITE PLAN REGULATIONS FROM THE TOWN OF HINGHAM AND USDA SOIL CONSERVATION SERVICE VEGETATIVE PRACTICES IN SITE DEVELOPMENT.

27. A WATERING TRUCK SHALL BE USED TO PERIODICALLY SPRAY THE CONSTRUCTION AREAS IN ORDER TO KEEP THE LEVEL OF DUST TO A MINIMUM DURING THE DRY MONTHS AND AS REQUIRED.

28. IF DEWATERING IS NECESSARY IT SHALL ONLY BE COMPLETED AS FOLLOWS: THE DISCHARGE SHALL BE STOPPED IMMEDIATELY IF THE RECEIVING AREA SHOWS ANY SIGN OF INSTABILITY OR EROSION. ALL CHANNELS, SWALES, AND DITCHES DUG FOR DISCHARGING WATER FROM THE EXCAVATED AREA SHALL BE STABLE PRIOR TO DIRECTING DISCHARGE TO THEM. IF A CONSTRUCTION EQUIPMENT BUCKET IS USED, IT SHALL EMPTY THE MATERIAL TO A STABLE AREA. NO DEWATERING SHALL OCCUR DURING PERIODS OF INTENSE, HEAVY RAIN. FLOW TO THE SEDIMENT REMOVAL STRUCTURE SHALL NOT EXCEED THE STRUCTURES CAPACITY TO SETTLE AND FILTER FLOW OR IS VOLUME CAPACITY. WHENEVER POSSIBLE, THE DISCHARGE FROM THE SEDIMENT REMOVAL STRUCTURE SHALL DRAIN TO A WELL-VEGETATED BUFFER BY SHEET FLOW WHILE MAXIMIZING THE DISTANCE TO THE NEAREST WATER RESOURCE AND MINIMIZING THE SLOPE OF THE BUFFER AREA. THERE SHALL BE NO DIRECT DISCHARGE TO EXISTING WETLANDS OR STREAMS. ALL DISCHARGE SHALL BE IN COMPLIANCE WITH STATE, LOCAL, AND FEDERAL REQUIREMENTS.

29. INITIATE STABILIZATION OF EXPOSED AREAS IMMEDIATELY IF CONSTRUCTION WORK TEMPORARILY OR PERMANENTLY CEASES.

30. ALL DISCHARGES FROM POLLUTION SOURCES ARE PROHIBITED ONSITE SUCH AS FUELS, WASTEWATER FROM WASH OUT OF CONCRETE, WASTEWATER FROM CLEAN OUT OF PAINTS, FORM RELEASE OILS, SOLVENTS, ADHESIVES, CURING COMPOUNDS, POLLUTANTS USED FOR MAINTENANCE OF VEHICLES AND EQUIPMENT, SOAPS & SOLVENTS, TOXIC OR HAZARDOUS SUBSTANCES, CHEMICALS AND OILS. IF A POLLUTANT IS DISCHARGED IT NEEDS TO BE IMMEDIATELY CLEANED UP BY REMOVING THE CHEMICAL AND AFFECTED SOIL OR AREA OF SPILL FROM THE SITE IN ACCORDANCE WITH BOTH THE MANUFACTURER RECOMMENDATIONS, FEDERAL, STATE, AND LOCAL REQUIREMENTS. DO NOT HOSE DOWN AND SPREAD SPILLED ITEM. ALL CHEMICALS USED ON THE SITE SHALL BE IN LEAK-PROOF CONTAINERS STORED AWAY FROM WETLANDS, SURFACE WATERS, STORMWATER INLETS, AND DRAINAGE MEASURES. SPILL KITS SHALL BE AVAILABLE ONSITE FOR EMERGENCY USE. THERE SHALL BE A SECONDARY CONTAINMENT MEASURE OF ALL CHEMICALS IN ADDITION TO SPILL-PROOF CONTAINERS.

31. PRIOR TO COMMENCEMENT OF CONSTRUCTION, APPLICABLE CONTRACTOR PERSONNEL MUST HAVE AN UNDERSTANDING OF THE EPA CONSTRUCTION GENERAL PERMIT REQUIREMENTS AND THEIR SPECIFIC RESPONSIBILITIES UNDER THE PERMIT. AT A MINIMUM, PERSONNEL MUST BE TRAINED AND UNDERSTAND THE FOLLOWING: LOCATION OF ALL STORMWATER CONTROLS AND HOW TO MAINTAIN THEM, PROCEDURES FOR COMPLYING WITH THE POLLUTION PREVENTION REQUIREMENTS. PROCEDURES FOR CONDUCTING INSPECTIONS, RECORDING FINDINGS, AND TAKING CORRECTIVE ACTION.

32. ALL SEDIMENT TRACKED ONTO ROADWAYS MUST BE REMOVED AT END OF EACH WORK DAY.

33. ALL USE OF CATIONIC TREATMENT CHEMICALS (EXAMPLES INCLUDE POLYMERS, CHITOSAN, CATIONIC PAM, FLOCCULANTS OR OTHER CHEMICAL UTILIZED FOR STABILIZATION) ARE PROHIBITED. IF ALL OTHER AVAILABLE STABILIZATION MEASURES ARE NOT POSSIBLE AND USE OF CATIONIC CHEMICALS IS ABSOLUTELY NECESSARY THE CONTRACTOR WILL NEED TO CONTACT THE EPA NEW ENGLAND OFFICE IN WRITING FOR APPROVAL AND SPECIFIC REQUIREMENTS (MAXIMUM DOSAGE RATE, RESIDUAL TESTING, SPECIFIC LIMITATIONS, ETC) PRIOR TO USE.

34. IF USING NON-VEGETATIVE STABILIZATION MEASURES, IT MUST BE COMPLETED NO LATER THAN 14 DAYS AFTER INITIATING STABILIZATION. ALL AREAS OF EXPOSED SOILS MUST BE COVERED.

35. INSPECTIONS OF EROSION CONTROL MEASURES SHALL BE AT LEAST ONCE EVERY 7 DAYS BY THE CONTRACTOR. AT A MINIMUM INSPECTIONS SHALL INCLUDE ALL DISTURBED AREAS, ALL STORMWATER CONTROLS AND POLLUTION PREVENTION MEASURES, ALL LOCATIONS WHERE STABILIZATION MEASURES HAVE BEEN IMPLEMENTED, EQUIPMENT AND MATERIAL STORAGE AREAS, ALL AREAS WHERE STORMWATER FLOWS AND ALL POINTS OF DISCHARGE. WHEN CORRECTIVE ACTIONS ARE REQUIRED, THE CONTRACTOR MUST IMMEDIATELY TAKE ALL STEPS TO PREVENT POLLUTANT DISCHARGES UNTIL A PERMANENT SOLUTION IS IMPLEMENTED. AS NECESSARY NEW OR MODIFIED CONTROLS MUST BE INSTALLED AND OPERATIONAL, THE REPAIR MUST BE COMPLETED WITHIN 7 DAYS FROM THE TIME OF DISCOVERY. WITHIN 24 HOURS OF A TRIGGERING CONDITION OCCURRING THAT REQUIRES A CORRECTIVE ACTION, A CORRECTIVE ACTION REPORT MUST BE COMPLETED.

MAINTENANCE:

ALL MEASURES STATED ON THE STORMWATER POLLUTION PREVENTION PLANS, SHALL BE MAINTAINED IN FULLY FUNCTIONAL CONDITION BY CONTRACTOR UNTIL NO LONGER REQUIRED FOR A COMPLETED PHASE OF WORK OR FINAL STABILIZATION OF THE SITE. ALL EROSION AND SEDIMENTATION CONTROL MEASURES SHALL BE CHECKED BY A QUALIFIED PERSON IN ACCORDANCE WITH THE CONTRACT DOCUMENTS OR THE APPLICABLE PERMIT, WHICHEVER IS MORE STRINGENT, AND REPAIRED IN ACCORDANCE WITH THE FOLLOWING:

1. INLET PROTECTION DEVICES AND BARRIERS SHALL BE REPAIRED OR REPLACED IF THEY SHOW SIGNS OF UNDERMINING, OR DETERIORATION.
2. ALL SEEDED AREAS SHALL BE CHECKED REGULARLY TO SEE THAT A HEALTHY STAND OF GRASS IS MAINTAINED. AREAS SHOULD BE FERTILIZED, WATERED, AND RESEEDED AS NEEDED.
3. ALL SEDIMENT CONTROLS SHALL BE REPAIRED TO THEIR ORIGINAL CONDITIONS IF DAMAGED. SEDIMENT SHALL BE REMOVED FROM THE TUBULAR SEDIMENT CONTROLS WHEN IT REACHES HALF THE HEIGHT OF THE CONTROL MEASURE OR AS REQUESTED BY THE OWNER OR ENGINEER.
4. THE CONSTRUCTION ENTRANCES SHALL BE MAINTAINED IN A CONDITION WHICH WILL PREVENT TRACKING OR FLOW OF MUD ONTO PUBLIC RIGHTS-OF-WAY. THIS MAY REQUIRE PERIODIC TOP DRESSING OF THE CONSTRUCTION ENTRANCES AS CONDITIONS DEMAND.
5. THE TEMPORARY PARKING AND STORAGE AREA SHALL BE KEPT IN GOOD CONDITION (SUITABLE FOR PARKING AND STORAGE). THIS MAY REQUIRE PERIODIC TOP DRESSING OF THE TEMPORARY PARKING AS CONDITIONS DEMAND.
6. OUTLET STRUCTURES IN THE SEDIMENTATION BASINS SHALL BE MAINTAINED IN OPERATIONAL CONDITIONS AT ALL TIMES. SEDIMENT SHALL BE REMOVED FROM SEDIMENT BASINS OR TRAPS WHEN THE DESIGN CAPACITY HAS BEEN REDUCED BY 50%.

ABBREVIATIONS:

ABAN	ABANDON
ADA	AMERICANS WITH DISABILITIES ACTS
ADJ	ADJUST
B	BORING
BC	BOTTOM OF CURB
BIT	BITUMINOUS
BLDG	BUILDING
BM	BENCH MARK
BOS	BOTTOM OF SLOPE
BOW	BOTTOM OF WALL
BV&B	BUTTERFLY VALVE & BOX
BVW	BORDERING VEGETATED WETLAND
CATV	CABLE TELEVISION
CB	CATCH BASIN
CF	CUBIC FEET
CFS	CUBIC FEET PER SECOND
CI	CAST IRON (PIPE)
CL	CENTERLINE
CLDI	CEMENT LINED DUCTILE IRON (PIPE)
CLF	CHAIN LINK FENCE
CMP	CORRUGATED METAL PIPE
CO	CLEAN OUT
CONC	CONCRETE
CONST	CONSTRUCTION
CONT	CONTRACTOR
CRD	COORDINATE
CUL	CULVERT
CY	CUBIC YARD
DB	DISTRIBUTION BOX
DBL	DOUBLE
DEM	DEMOLISH
DET	DETENTION
DIA	DIAMETER
DI	DUCTILE IRON (PIPE)
DIM	DIMENSION
DMH	DRAIN MANHOLE
DW	DOMESTIC WATER (OR DRY WELL)
DWG	DRAWING
DYCL	DOUBLE YELLOW CENTERLINE
EHH	ELECTRIC HANDHOLE
EL	ELEVATION
ELEC	ELECTRIC
EMH	ELECTRIC MANHOLE
EOP	EDGE OF PAVEMENT
EOR	EDGE OF ROAD
EOW	EDGE OF WETLANDS
ETC	ELECTRIC, TELEPHONE, CABLE
EXIST	EXISTING
EXT	EXTERIOR
FCC	FLUSH CONCRETE CURB
FES	FLARED END SECTION
FFE	FINISH FLOOR ELEVATION
FPS	FEET PER SECOND
FS	FIRE SERVICE
FT	FOOT/FEET
GC	GENERAL CONTRACTOR
GEN	GENERAL
GG	GAS GATE
GR	GUIDE RAIL
GRAN	GRANITE
GV	GATE VALVE
GV&B	GATE VALVE & BOX
GW	GROUND WATER
H	HORIZONTAL
HOR	HORIZONTAL
HT	HEIGHT
HW	HEADWALL
HWY	HIGHWAY
HYD	HYDRANT
ID	INSIDE DIAMETER
IN	INCHES
INCL	INCLUDE
INST	INSTALLED
INV, I.E.	INVERT, INVERT ELEVATION
L	LENGTH
LP	LIGHT POLE
MAT	MATERIAL
MAX	MAXIMUM
MH	MANHOLE
MIN	MINIMUM
MISC	MISCELLANEOUS
MTD	MOUNTED
MW	MONITORING WELL
N	NORTH
NIC	NOT IN CONTRACT
NO	NUMBER
NTS	NOT TO SCALE
OC	ON CENTER
OD	OUTSIDE DIAMETER
OHW	OVERHEAD WIRE
OVHD	OVERHEAD
OW	OBSERVATION WELL
PC	POINT OF CURVATURE
PCC	PRECAST CONCRETE CURB
PI	POINT OF INTERSECTION
PL	PROPERTY LINE
POC	POINT ON CURVATURE
POT	POINT ON TANGENT
PRC	POINT OF REVERSE CURVATURE
PROP, P	PROPOSED
PT	POINT (OR POINT OF TANGENT)
PVC	POLYVINYL CHLORIDE (PIPE)
R&R	REMOVE & RESET/REPLACE
R&S	REMOVE & STACK
RCP	REINFORCED CONCRETE PIPE
RD	ROAD (OR ROOF DRAIN)
RELOC	RELOCATE
REM	REMOVE
RET	RETAIN, RETAINING OR RETENTION
ROW	RIGHT OF WAY
RR	RAILROAD
RWY	ROADWAY
SD	SUBDRAIN
SF	SQUARE FEET
SGC	SLOPED GRANITE CURB
SMH	SEWER MANHOLE
SP	STANDPIPE
SPEC	SPECIFICATION
STA	STATION
STD	STANDARD
SWEL	SOLID WHITE EDGE LINE
SW	SIDEWALK
SWLL	SOLID WHITE LANE LINE
SYCL	SOLID YELLOW CENTERLINE
TB	TEST BORING
TC	TOP OF CURB
TD	TRENCH DRAIN
TEL, T	TELEPHONE
TMH	TELEPHONE MANHOLE
TOS	TOP OF SLOPE
TOW	TOP OF WALL
TP	TEST PIT
TYP	TYPICAL
UD	UNDERDRAIN
UP	UTILITY POLE
V	VERTICAL
VCP	VITRIFIED CLAY PIPE
VERT	VERTICAL
VGC	VERTICAL GRANITE CURB
WG	WATER GATE
WM	WATER MAIN
WMH	WATER MANHOLE
WSO	WATER SHUTOFF

CONSTRUCTION GENERAL PERMIT NOTES AND NARRATIVE:

NARRATIVE: THE STORMWATER POLLUTION PREVENTION PLANS CONSIST OF THE EROSION CONTROL PLANS TOGETHER WITH AN EXISTING CONDITIONS PLANS, GRADING PLANS, ABBREVIATIONS AND NOTES SHEETS, AND DETAIL SHEETS.

THE EROSION CONTROL PLAN WILL BE IMPLEMENTED TO:

A. TREAT EROSION AS SOON AS POSSIBLE AFTER DISTURBANCE.

B. PREVENT SEDIMENT FROM LEAVING THE CONSTRUCTION AREA AND ENTERING THE RECEIVING WATERS.

C. CONSTRUCTION ACTIVITIES SHALL BE SCHEDULED TO MINIMIZE EROSION.

D. ONLY DISTURB, CLEAR, OR GRADE AREAS NECESSARY FOR CONSTRUCTION.

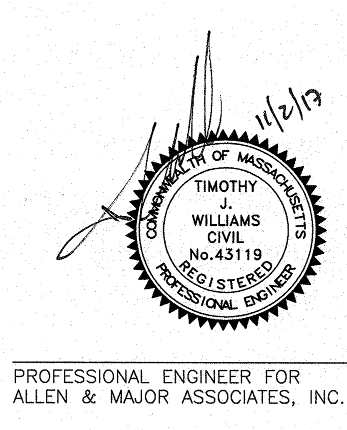

PROFESSIONAL ENGINEER FOR
ALLEN & MAJOR ASSOCIATES, INC.

CUBE 3
architecture interiors planning
360 Merrimack Street Lawrence MA 01843
phone: 978.989.9900 www.cube3studio.com

project information:
BROADSTONE
BARE COVE
HINGHAM
230 BEAL ST.
HINGHAM, MA

client information:
Broadstone Bare Cove Alliance, LLC.

C/O Alliance Residential Company
184 High Street Suite 401 Boston, MA 02110

consultant information:
PREPARED BY:
ALLEN & MAJOR ASSOCIATES, INC.
civil & structural engineering • land surveying
environmental consulting • landscape architecture
www.allenmajor.com
100 COMMERCE WAY
WOBURN MA 01801
TEL: (781) 935-6889
FAX: (781) 935-2896
WOBURN, MA • LAKEVILLE, MA • MANCHESTER, NH

issuance:
COMPREHENSIVE PERMIT APPLICATION PLANS
NOT FOR CONSTRUCTION

key plan:

drawing information:

drawing by:	SJL
drawing checked by:	CMQ
drawing scale:	1"=40'
drawing date:	12 AUGUST 2017
project number:	2118-02

drawing revisions:

No.	Description	Date
1	Issued for ZBA Resubmittal	10/25/16
2	Issued for ZBA Resubmittal	11/02/16
3	Issued for ZBA Resubmittal	01/04/17
4	Issued for ZBA Resubmittal	01/19/17
5	Issued for ZBA Resubmittal	02/14/17
6	Issued for ZBA Resubmittal	03/29/17
7	Issued for ZBA Resubmittal	04/11/17
8	Modifications to Project Plans	11/02/17

registration:

drawing name:
ABBREVIATIONS & NOTES

drawing number:
ABB-2

N:\PROJECTS\2118-02\CIVIL\DRAWINGS\CURRENT\C-2118-02 - ABBREVIATIONS & NOTES.DWG

COPYRIGHT (C) 2017 CUBE 3 STUDIO LLC, ALL RIGHTS RESERVED

STORMWATER POLLUTION PREVENTION PLAN

2.1 GENERAL

FOR GRADING AND DRAINAGE SEE DRAWING SHEETS C–3.

2.1.1. THE FIRST STAGE INVOLVES ACTIVITIES NEEDED TO ADDRESS STORMWATER MANAGEMENT; EXCAVATING MATERIAL DESIGNATED FOR OFF–SITE REMOVAL OR ON–SITE RELOCATION; AND FENCING SELECTED AREAS. STAGE ONE WILL PREPARE SITE FOR CONVENTIONAL CONSTRUCTION.

2.1.2. THE SECOND STAGE WILL CONSIST OF ROUTINE CONSTRUCTION INVOLVING DEMOLITION, PAVING, LANDSCAPING AND UTILITIES.

2.1.3. THERE ARE GENERAL PHASES OF CONSTRUCTION AS IDENTIFIED BELOW. IN EACH PHASE OF CONSTRUCTION, IMPLEMENT STANDARD EROSION AND SEDIMENT CONTROL PRACTICES PRIOR TO INITIATING EARTH DISTURBING ACTIVITIES, AND MAINTAIN THESE PRACTICES THROUGHOUT THE COURSE OF CONSTRUCTION.

TYPICAL PRACTICES TO BE APPLIED TO THE SITE INCLUDE THE FOLLOWING:

PRIOR TO DEMOLITION AND EARTH DISTURBANCE IN ANY WORK AREA, INSTALL SILTATION BARRIERS (BALES OR SILT FENCE WITH BALES) BETWEEN THE WORK AREA AND THE AREA(S) TO WHICH IT DRAINS.

DISCHARGE WATER FROM DEWATERING OPERATIONS TO A TEMPORARY SILTATION TRAP OR SEDIMENTATION BASIN.

PROVIDE TEMPORARY BERMS AND SWALES TO DIVERT SURFACE WATER AWAY FROM THE AREAS THAT WILL BE EXPOSED BY CONSTRUCTION ACTIVITY TO MINIMIZE THE AMOUNT OF SURFACE WATER COMING INTO CONTACT WITH EXPOSED SOILS. PROVIDE STABLE OUTLETS FOR THESE DEVICES, AND LINE OR VEGETATE THESE DIVERSIONS TO PROVIDE FOR DEVICES, AND LINE OR VEGETATE THESE DIVERSIONS TO PROVIDE FOR THEIR STABILITY DURING CONSTRUCTION.

LIMIT THE EXTENT OF EXPOSED SOILS TO AREAS THAT CAN BE WORKED AND RESTABILIZED WITHIN THE CONSTRUCTION SEASON AND DURING THE SPECIFIC CONSTRUCTION PHASE. WHEN EARTHWORK CONSTRUCTION ACTIVITY IN AN AREA IS COMPLETE, STABILIZE THE AREA WITH A SUITABLE SURFACE AS DESCRIBED BELOW.

IN ADDITION TO THESE PRACTICES, FOLLOW THE SPECIAL PRACTICES DESCRIBED BELOW. COMPLY WITH THE DIRECTIONS OF THE OWNER'S REPRESENTATIVE TO ADDRESS EROSION AND SEDIMENTATION CONDITIONS THAT MAY ARISE ON A CASE BY CASE BASIS DURING CONSTRUCTION.

THE FOLLOWING IS A DESCRIPTION OF MINIMUM CONSTRUCTION REQUIREMENTS AND DOES NOT RELIEVE THE CONTRACTOR OF HIS RESPONSIBILITIES WITH REGARD TO DETERMINING THE ADEQUACY OF MEANS AND METHODS OF CONSTRUCTION.

2.2 ESTIMATED CONSTRUCTION SEQUENCING.

THE FOLLOWING IS AN ESTIMATED CONSTRUCTION SEQUENCING. SOME ACTIVITIES MAY OCCUR AT THE SAME TIME RATHER THAN AT SEPARATE TIMES OR OUT OF SEQUENCE DUE TO ACTUAL FIELD CONDITIONS OR OTHER FACTORS. ACTUAL SCHEDULING WILL BE COMPLETED BY THE SITE CONTRACTOR.

(CONTRACTOR TO FOLLOW ANY ADDITIONAL PERMIT REQUIREMENTS OR STEPS AT NO ADDITIONAL COST TO THE OWNERS FROM EITHER STATE OR LOCAL PERMITS, THIS INCLUDES BUT IS NOT LIMITED TO THE ORDER OF CONDITIONS FROM THE HINGHAM ZONING BOARD OF APPEALS)

- INSTALL ALL EROSION CONTROL MEASURES INCLUDING BUT NOT LIMITED TO TEMPORARY STRAW BALE FILTERS, SILT SACKS, CONSTRUCTION ENTRANCES, AND STRAWBALES AND SILT FENCE.
- SETUP STAGING AND MATERIAL STORAGE / STOCKPILE AREAS.
- IF REQUIRED, CONSTRUCT TEMPORARY SILT / DEWATERING BASINS.
- PROTECT AND MARK ALL EXISTING ITEMS NOTED TO REMAIN.
- PERFORM DEMOLITION WORK. SURVEY AND IDENTIFY LIMITS OF SITE CLEARING. CONDUCT SITE CLEARING.
- PULVERIZE EXISTING PAVEMENT AND DEMO EXISTING MATERIALS AS NOTED.
- REMOVE EXISTING LOAM AND SUBSOIL AND STOCKPILE FOR REUSE.
- PERFORM ROUGH GRADING AND CONSTRUCT BUILDING FOUNDATIONS.
- INSTALL UNDERGROUND UTILITIES.
- PERFORM FINE GRADING; PLACE BINDER PAVEMENT COURSE.
- PLACE PAVEMENT TOP COURSE; CONSTRUCT SIDEWALKS AND ALL OTHER SITE IMPROVEMENTS.
- INSTALL PAVEMENT MARKING, SITE SIGNAGE & COMPLETE LANDSCAPING.
- REMOVE TEMPORARY SILT CONTROLS AFTER ONCE GIVEN APPROVAL BY TOWN OF HINGHAM OR THE ENGINEER AND SITE IS STABILIZED.

OPERATION AND MAINTENANCE CONSTRUCTION ACTIVITIES:

1. CONTACT THE TOWN OF HINGHAM AT LEAST THREE (3) DAYS PRIOR TO START OF CONSTRUCTION.
2. INSTALL STRAWBALES AND SILT FENCE AS SHOWN ON THE EROSION CONTROL PLAN. INSTALL CONSTRUCTION FENCING IF DETERMINED TO BE NECESSARY AT THE COMMENCEMENT OF CONSTRUCTION.
3. INSTALL THE CONSTRUCTION ENTRANCES AT THE LOCATIONS SHOWN ON THE EROSION CONTROL PLAN.
4. SITE ACCESS SHALL BE ACHIEVED ONLY FROM THE DESIGNATED CONSTRUCTION ENTRANCES.
5. STOCKPILES SHALL BE STABILIZED WITH EROSION CONTROL MATTING OR TEMPORARY SEEDING WHENEVER PRACTICABLE, BUT IN NO CASE MORE THAN 14 DAYS AFTER THE CONSTRUCTION ACTIVITY IN THAT PORTION OF THE SITE HAS TEMPORARILY OR PERMANENTLY CEASED.
6. INSTALL SILT SACKS AND STRAWBALES AROUND EACH DRAIN INLET AS SOON AS PRACTICABLE.
7. ALL EROSION CONTROL MEASURES SHALL BE INSPECTED WEEKLY AND AFTER EVERY RAINFALL EVENT.
8. ALL EROSION CONTROL MEASURES SHALL BE MAINTAINED, REPAIRED OR REPLACED AS REQUIRED OR AT THE DIRECTION OF THE OWNER'S ENGINEER, THE TOWN ENGINEER, OR THE TOWN CONSERVATION AGENT.
9. SEDIMENT ACCUMULATION UP–GRADIENT OF THE STRAWBALES AND SILT FENCE GREATER THAN 6" IN DEPTH SHALL BE REMOVED AND DISPOSED OF IN ACCORDANCE WITH ALL APPLICABLE REGULATIONS.
10. IF IT APPEARS THAT SEDIMENT IS EXITING THE SITE, SILT SACKS SHALL BE INSTALLED IN ALL CATCH BASINS ADJACENT TO THE SITE. SEDIMENT ACCUMULATION ON ALL ADJACENT CATCH BASIN INLETS SHALL BE REMOVED AND THE SILT SACK REPLACED IF TORN OR DAMAGED.
11. THE CONTRACTOR SHALL COMPLY WITH THE GENERAL AND EROSION NOTES AS SHOWN ON THE SITE DEVELOPMENT PLANS AND SPECIFICATIONS.
12. THE STABILIZED CONSTRUCTION ENTRANCES SHALL BE INSPECTED WEEKLY. THE ENTRANCES SHALL BE MAINTAINED BY ADDING ADDITIONAL CLEAN, ANGULAR, DURABLE STONE TO REMOVE THE SOIL FROM THE CONSTRUCTION VEHICLE TIRES WHEN EXITING THE SITE. IF SOIL IS STILL LEAVING THE SITE VIA THE CONSTRUCTION VEHICLE TIRES, ADJACENT ROADWAYS SHALL BE KEPT CLEAN BY STREET SWEEPING.
13. DUST POLLUTION SHALL BE CONTROLLED USING ON–SITE WATER TRUCKS AND OR AN APPROVED SOIL STABILIZATION PRODUCT.
14. CARE SHOULD BE TAKEN TO PREVENT DISCHARGE OF SEDIMENT TO ABUTTERS.

2.3 MAINTENANCE

2.3.1 DURING THE PERIOD OF CONSTRUCTION AND/OR UNTIL LONG TERM VEGETATION IS ESTABLISHED: SEEDED AREAS WILL BE FERTILIZED AND RESEEDED AS NECESSARY TO INSURE VEGETATION ESTABLISHMENT.

2.3.2 TEMPORARY SEDIMENTATION BASINS WILL BE CHECKED AFTER EACH SIGNIFICANT RAINFALL AND NO LESS THAN WEEKLY, AND CLEANED AS NEEDED TO RETAIN STORAGE CAPACITY.

2.3.3 TEMPORARY DRAINAGE SWALES WILL BE CHECKED WEEKLY AND REPAIRED WHEN NECESSARY.

2.3.4 THE STRAW BALE AND SILTATION FENCING BARRIERS AND OTHER EROSION AND SEDIMENT CONTROL MEASURES/DEVICES SHALL BE INSPECTED, CLEANED, REPLACED AND/OR REPAIRED AS NECESSARY, AND NO LESS THAN WEEKLY, AND AFTER EACH SIGNIFICANT RAINFALL. ACCUMULATED SEDIMENTS SHALL BE REMOVED WHEN THEY REACH HALF THE HEIGHT OF THE BARRIER.

2.4. GENERAL

2.4.1. ALL EROSION AND SEDIMENTATION CONTROL MEASURES SHALL BE CONSTRUCTED IN ACCORDANCE WITH (USDA) NATURAL RESOURCES CONSERVATION SERVICE (NRCS, FORMERLY SCS) GUIDELINES AND ALL LOCAL MUNICIPAL REGULATIONS.

2.4.2. THE CONTRACTOR SHALL BE RESPONSIBLE FOR ESTABLISHING AND MAINTAINING ALL CONTROL POINTS AND BENCH MARKS NECESSARY FOR THE WORK.

2.4.3. EROSION AND SEDIMENTATION CONTROL MEASURES SHALL BE IN PLACE PRIOR TO THE COMMENCEMENT OF ANY SITEWORK OR EARTHWORK OPERATIONS, SHALL BE MAINTAINED DURING CONSTRUCTION, AND SHALL REMAIN IN PLACE UNTIL ALL SITEWORK IS COMPLETE AND GROUNDCOVER IS ESTABLISHED.

2.4.4. ALL WORK SHALL BE IN ACCORDANCE WITH THE PERMITS AND APPROVALS ISSUED BY THE LOCAL PLANNING BOARD, THEIR AGENTS, AND THE CONSTRUCTION SPECIFICATIONS.

2.4.5. STOCKPILES SHALL BE SURROUNDED ON THEIR PERIMETERS WITH STAKED BALES AND/OR SILTATION FENCES TO PREVENT AND/OR CONTROL SILTATION AND EROSION.

2.4.6. TOPS OF STOCKPILES SHALL BE COVERED IN SUCH A MANNER THAT STORMWATER DOES NOT INFILTRATE THE MATERIALS AND THEREBY RENDER THE SAME UNSUITABLE FOR FILL USE.

> IF APPLICABLE, EFFORTS SHALL BE MADE TO AVOID STOCKPILING CUT GLACIAL TILL SOILS SINCE STOCKPILING INCREASES EXPOSURE TO PRECIPITATION AND PROVIDES GREATER OPPORTUNITY FOR FROST PENETRATION. SOME OF THE STEPS IN SEQUENCING MAY OCCUR SIMULTANEOUSLY, PARTICULARLY CUT AND FILL OPERATIONS, IN AN EFFORT TO AVOID STOCKPILING.

2.4.7. ALL DISTURBED OR EXPOSED AREAS SUBJECT TO EROSION SHALL BE STABILIZED WITH MULCH OR SEEDED FOR TEMPORARY VEGETATIVE COVER. NO AREA, SUBJECT TO EROSION SHALL BE LEFT DISTURBED AND UNSTABILIZED FOR PERIODS LONGER THAN IS ABSOLUTELY NECESSARY TO CARRY OUT THAT PORTION OF THE CONSTRUCTION WORK.

2.4.9. BALE DIKES SHALL BE CONSTRUCTED AT ALL EXISTING & PROPOSED CATCH BASINS LOCATED IN AREAS SUBJECT TO STORMWATER RUN–OFF FROM PROPOSED CONSTRUCTION, OR AS DIRECTED BY THE OWNER'S REPRESENTATIVE. NO SEDIMENTS SHALL ENTER THE OFF–SITE DRAINAGE SYSTEMS AT ANY TIME. SEDIMENT DISCHARGE TO OFF–SITE PROPERTY IS PROHIBITED.

2.4.10. CULVERT/PIPE INLETS AND OUTFALLS SHALL BE PROTECTED FROM INCOMING SILT UNTIL ALL DISTURBED AREAS TRIBUTARY TO THEM ARE PERMANENTLY STABILIZED.

2.4.11. ANY DEWATERING REQUIRED DURING CONSTRUCTING ON THE SITE SHALL DISCHARGE INTO A DEWATERING FILTER OR THE TEMPORARY SILT BASIN PRIOR TO DISCHARGE TO THE EXISTING DETENTION BASIN OR TO OFF–SITE .

2.4.12. BALES AND SILTATION FENCING AND TEMPORARY SILT BASIN SHALL BE INSPECTED NO LESS THAN WEEKLY AND AFTER EACH SIGNIFICANT RAINFALL AND REPLACED AS REQUIRED.

2.4.13. ALL PROPOSED NON–RIPRAP SLOPES STEEPER THAN 3:1 SHALL BE STABILIZED WITH EROSION CONTROL FABRIC AND PROTECTED FROM EROSION.

2.4.14. THE CONTRACTOR SHALL KEEP ON SITE AT ALL TIMES ADDITIONAL BALES AND EXTRA SILTATION FENCING FOR INSTALLATION AT THE DIRECTION OF THE OWNER'S REPRESENTATIVE OR THE MUNICIPAL AGENTS TO MITIGATE ANY EMERGENCY CONDITION.

2.4.16. THE CONTRACTOR IS RESPONSIBLE FOR OBTAINING AND PAYING FOR ANY PERMITS AND/OR CONNECTION FEES REQUIRED TO CARRY OUT THE WORK INCLUDING BUT NOT LIMITED TO DEMOLITION.

2.4.17. DISPOSAL OF ALL DEMOLISHED MATERIALS IS THE RESPONSIBILITY OF THE CONTRACTOR AND MUST BE OFF–SITE IN ACCORDANCE WITH ALL FEDERAL, STATE, AND LOCAL MUNICIPAL REQUIREMENTS.

2.4.18. THE CONTRACTOR SHALL PROTECT AND/OR CAP OFF ALL EXISTING ON– SITE UTILITY SERVICES DESIGNATED ON THESE DRAWINGS. SERVICES SHALL BE CAPPED OFF WHERE SAME ENTER THE PERIMETER PROPERTY LINE.

2.4.19. THE LIMIT OF WORK LINE FOR THE AREA TO BE CLEARED AND GRUBBED SHALL BE THE SAME AS THE LIMIT OF WORK LINE NECESSARY FOR GRADING PURPOSES, (I.E., THE GRADING LIMITS AROUND THE PERIMETER OF THE PROJECT AREA).

2.4.20. THE AREA OR AREAS OF ENTRANCE AND EXIT TO AND FROM THE SITE SHALL BE MAINTAINED IN A CONDITION WHICH WILL PREVENT TRACKING OR FLOWING OF SEDIMENT ONTO PUBLIC RIGHTS–OF–WAY. ALL SEDIMENT SPILLED, DROPPED, WASHED OR TRACKED ONTO PUBLIC RIGHT–OF–WAY MUST BE REMOVED IMMEDIATELY.

2.4.21. FOLLOWING THE ADDITION OF A BINDER COURSE, THE CONTRACTOR SHALL SWEEP ALL ON–SITE PAVEMENT, IF NECESSARY, UNTIL ALL SITE CONSTRUCTION IS COMPLETED.

11/2/17

COMMONWEALTH OF MASSACHUSETTS
TIMOTHY J. WILLIAMS
CIVIL
No. 43119
REGISTERED PROFESSIONAL ENGINEER

PROFESSIONAL ENGINEER FOR
ALLEN & MAJOR ASSOCIATES, INC.

CUBE 3
architecture interiors planning
360 Merrimack Street Lawrence MA 01843
phone: 978.989.0900 www.cube3studio.com

project information:

BROADSTONE
BARE COVE
HINGHAM
230 BEAL ST.
HINGHAM, MA

client information:

Broadstone Bare
Cove Alliance, LLC.

C/O Alliance
Residential Company
184 High Street Suite
401 Boston, MA 02110

consultant information:

PREPARED BY

ALLEN & MAJOR
ASSOCIATES, INC.
civil & structural engineering • land surveying
environmental consulting landscape architecture
www.allenandmajor.com
100 Grossman Drive
Braintree, MA 02184
TEL: (781) 935-6889
FAX: (781) 935-2896
WOBURN, MA • LAKEVILLE, MA • MARCHESTER, NH

issuance:

COMPREHENSIVE
PERMIT
APPLICATION PLANS
NOT FOR
CONSTRUCTION

key plan:

drawing information:

drawing by:	SJL
drawing checked by:	CMQ
drawing scale:	1"=40'
drawing date:	12 AUGUST 2017
project number:	2118-02

drawing revisions:

No.	Description	Date
1	Issued for ZBA Resubmittal	10/25/16
2	Issued for ZBA Resubmittal	11/02/16
3	Issued for ZBA Resubmittal	01/04/17
4	Issued for ZBA Resubmittal	01/19/17
5	Issued for ZBA Resubmittal	02/14/17
6	Issued for ZBA Resubmittal	03/29/17
7	Issued for ZBA Resubmittal	04/11/17
8	Modifications to Project Plans	11/02/17

registration:

drawing name:

ABBREVIATIONS
& NOTES

drawing number:

ABB-3

N:\PROJECTS\2118–02\CIVIL\DRAWINGS\CURRENT\C–2118–02 – ABBREVIATIONS & NOTES.DWG

COPYRIGHT (C) 2017 CUBE 3 STUDIO LLC, ALL RIGHTS RESERVED

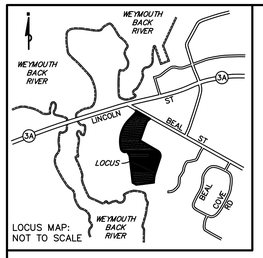

SCHEDULE B – SECTION 2: EXCEPTIONS of First American Title Insurance Company, Commitment for Title Insurance, Commitment Number NCS–761162–BOS1, Effective Date: July 27, 2017.

5 Easement granted by James M. Salah to Hingham Property Trust dated September 19, 1977, recorded in Book 4392, Page 146. See plan recorded in Plan Book 19, Page 1001. EASEMENT DESCRIBED IS NOT ON LOCUS PROPERTY, 20' WIDE SEWER EASEMENT SHOWN HEREON CONNECTS TO SAID EASEMENT TO THE WEST OF THE LOCUS PROPERTY.

6 Final Order issued by the Commonwealth of Massachusetts Department of Environmental Management dated January 13, 1987, recorded in Book 7574, Page 221. See plan recorded in Plan Book 28, Page 892. NOT A SURVEY RELATED ITEM.

7 This item has been intentionally deleted.

8 Site Assignment by Hingham Board of Health dated May 4, 1988, recorded in Book 8647, Page 280. NOT A SURVEY RELATED ITEM.

9 Letter issued by the Commonwealth of Massachusetts Department of Environmental Quality Engineering to Hingham Mutual Fire Insurance Co. dated August 25, 1988, recorded in Book 8674, Page 282. NOT A SURVEY RELATED ITEM.

10 This item has been intentionally deleted.

11 This item has been intentionally deleted.

12 This item has been intentionally deleted.

13 Notice of Purchase and Sale Agreement between Hingham Mutual Fire Insurance Company and Alliance Realty Partners, LLC, dated as of February 17, 2019, recorded in Book 46661, Page 103. NOT A SURVEY RELATED ITEM.

TITLE NOTES:

1) NO OBSERVABLE EVIDENCE OF EARTH MOVING WORK, CONSTRUCTION OR BUILDING ADDITIONS WITHIN RECENT MONTHS.

2) NO APPARENT CHANGES IN STREET RIGHT OF WAY LINES, EITHER COMPLETED OR PROPOSED WERE OBSERVED.

3) NO OBSERVABLE EVIDENCE OF SITE USE AS A SOLID WASTE DUMP, SUMP, OR SANITARY LANDFILL.

4) NO OBSERVABLE EVIDENCE OF SITE USE AS A CEMETERY OR BURIAL GROUND.

5) THE BUILDING NUMBER WAS OBSERVED.

6) THE PREMISES HAS 99 SPACES MARKED FOR PARKING.
REGULAR SPACES = 88
HANDICAPPED SPACES = 11

7) THE PREMISES HAS DIRECT ACCESS TO THE PUBLIC WAY BEAL STREET.

8) OWNER: HINGHAM MUTUAL FIRE INSURANCE COMPANY
DEED BOOK 8081 PAGE 289
ASSESSOR'S PARCEL ID 46–0–17

F L O O D N O T E

THE PARCEL SHOWN HEREON IS LOCATED IN ZONE X (UNSHADED) AND ZONE X (SHADED) AS SHOWN ON FLOOD INSURANCE RATE MAP No. 25023C0081J, EFFECTIVE DATE JULY 17, 2012.

D A T U M N O T E

THE ELEVATIONS SHOWN HEREON ARE BASED ON THE NORTH AMERICAN VERTICAL DATUM OF 1988 (NAVD88), AND WERE DETERMINED USING GPS OBSERVATIONS AND AN OPUS REDUCTION ON DECEMBER 30, 2016.

As–Surveyed Legal Description

A certain parcel of land located in the Commonwealth of Massachusetts, County of Plymouth, Town of Hingham, situated on the southeasterly sideline of Beal Street, more particularly bounded and described as follows:

Beginning at a point on the southeasterly sideline of Beal Street, said point being the most northwesterly corner of the parcel; thence running

S 60°13'56" E	217.16' to a point; thence turning and running
S 60°17'19" E	71.21' to a point, said last two courses being by the southeasterly sideline of Beal Street; thence turning and running
S 49°03'28" W	68.39' to a point; thence turning and running
S 22°16'28" W	98.05' to a point; thence turning and running
S 18°49'00" W	264.64' to a point; thence turning and running
S 59°57'00" E	365.18' to a point of curvature; thence running
SOUTHERLY	134.95' by a curve to the right having a radius of 100.00' to a point of tangency; thence running
S 17°22'13" W	284.36' to a point of curvature; thence running
SOUTHERLY	174.13' by a curve to the left having a radius of 565.00' to a point of tangency; thence running
S 82°34'49" W	312.94' to a point of non–tangency; thence turning and running
NORTHWESTERLY	70.00' by a curve to the left having a radius of 500.00' to a point of non–tangency; thence turning and running
N 07°02'32" W	478.09' to a point; thence turning and running
N 30°46'51" W	90.00' to a point of non–tangency; thence turning and running
WESTERLY	132.86' by a curve to the right having a radius of 72.00' to a point of compound curvature; thence running
NORTHERLY	547.56' by a curve to the right having a radius of 540.00' to a point of tangency; thence running
N 43°02'28" E	195.30' to a point of curvature; thence running
NORTHERLY	36.05' by a curve to the left having a radius of 20.00' to the POINT OF BEGINNING.

Containing 525,291 square feet or 12.059 acres, more or less.

LEGEND:

BERM	BITUMINOUS CONCRETE BERM
BIT CONC	BITUMINOUS CONCRETE
BW	BARBED WIRE
CB	CATCH BASIN
CLF	CHAIN LINK FENCE
DMH	DRAIN MANHOLE
GC	GRANITE CURB
GW	GUY WIRE
I=	INVERT=
LP	LIGHT POLE
MC	METAL COVER
P	POST
R=	RIM=
RCP	REINFORCED CONCRETE PIPE
RET	RETAINING
S	SIGN
SMH	SEWER MANHOLE
TMH	TELEPHONE MANHOLE
TP	TEST PIT
TR	TRANSFORMER
UP	UTILITY POLE
WF	WETLAND FLAG
WG	WATER GATE

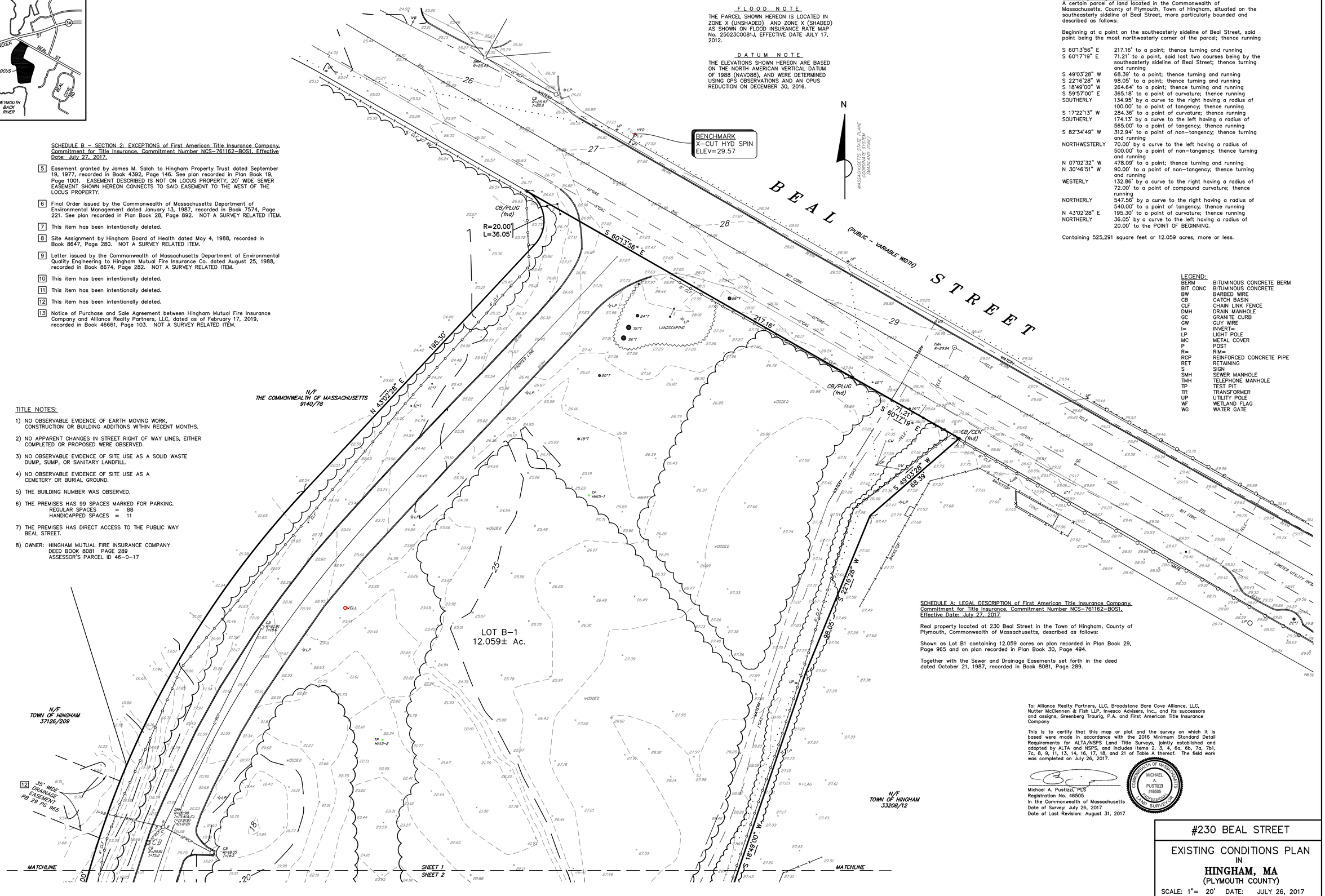

SCHEDULE A: LEGAL DESCRIPTION of First American Title Insurance Company, Commitment for Title Insurance, Commitment Number NCS–761162–BOS1, Effective Date: July 27, 2017

Real property located at 230 Beal Street in the Town of Hingham, County of Plymouth, Commonwealth of Massachusetts, described as follows:

Shown as Lot B1 containing 12.059 acres on plan recorded in Plan Book 29, Page 965 and on plan recorded in Plan Book 30, Page 494.

Together with the Sewer and Drainage Easements set forth in the deed dated October 21, 1987, recorded in Book 8081, Page 289.

To: Alliance Realty Partners, LLC, Broadstone Bare Cove Alliance, LLC, Nutter McClennen & Fish LLP, Invesco Advisers, Inc., and its successors and assigns, Greenberg Traurig, P.A. and First American Title Insurance Company

This is to certify that this map or plat and the survey on which it is based were made in accordance with the 2016 Minimum Standard Detail Requirements for ALTA/NSPS Land Title Surveys, jointly established and adopted by ALTA and NSPS, and includes Items 2, 3, 4, 6a, 6b, 7a, 7b1, 7c, 8, 9, 11, 13, 14, 16, 17, 18, and 21 of Table A thereof. The field work was completed on July 26, 2017.

Michael A. Pustizzi, PLS
Registration No. 46505
In the Commonwealth of Massachusetts
Date of Survey: July 26, 2017
Date of Last Revision: August 31, 2017

COMMONWEALTH OF MASSACHUSETTS
MICHAEL A. PUSTIZZI
#46505
PROFESSIONAL LAND SURVEYOR

Z O N I N G T A B L E

ZONING DISTRICT	=	OFFICE PARK
MINIMUM LOT SIZE	=	5 ACRES
MINIMUM LOT AREA	=	200 FEET
MAXIMUM BUILDING HEIGHT	=	35 FEET
MINIMUM FRONT YARD	=	100 FEET
MINIMUM SIDE YARD	=	50 FEET
MINIMUM REAR YARD	=	50 FEET

UNDERGROUND UTILITIES WERE COMPILED FROM AVAILABLE RECORD PLANS OF UTILITY COMPANIES AND PUBLIC AGENCIES AND ARE APPROXIMATE ONLY. BEFORE DESIGN AND CONSTRUCTION CALL "DIG SAFE" 1–888–344–7233. SOME DATA IS CONFLICTING AND CAN ONLY BE VERIFIED BY EXCAVATION.

#230 BEAL STREET

EXISTING CONDITIONS PLAN
IN
HINGHAM, MA
(PLYMOUTH COUNTY)

SCALE: 1"= 20' DATE: JULY 26, 2017

0 20 40 60 80 ft

Precision Land Surveying, Inc.
32 Turnpike Road
Southborough, Massachusetts 01772
TELE NO.: (508) 460–1789 FAX NO.:(508) 970–0096

4402TP1.DWG SHEET 1 OF 4

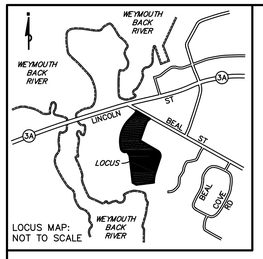

DATUM NOTE

THE ELEVATIONS SHOWN HEREON ARE BASED ON THE NORTH AMERICAN VERTICAL DATUM OF 1988 (NAVD88), AND WERE DETERMINED USING GPS OBSERVATIONS AND AN OPUS REDUCTION ON DECEMBER 30, 2016.

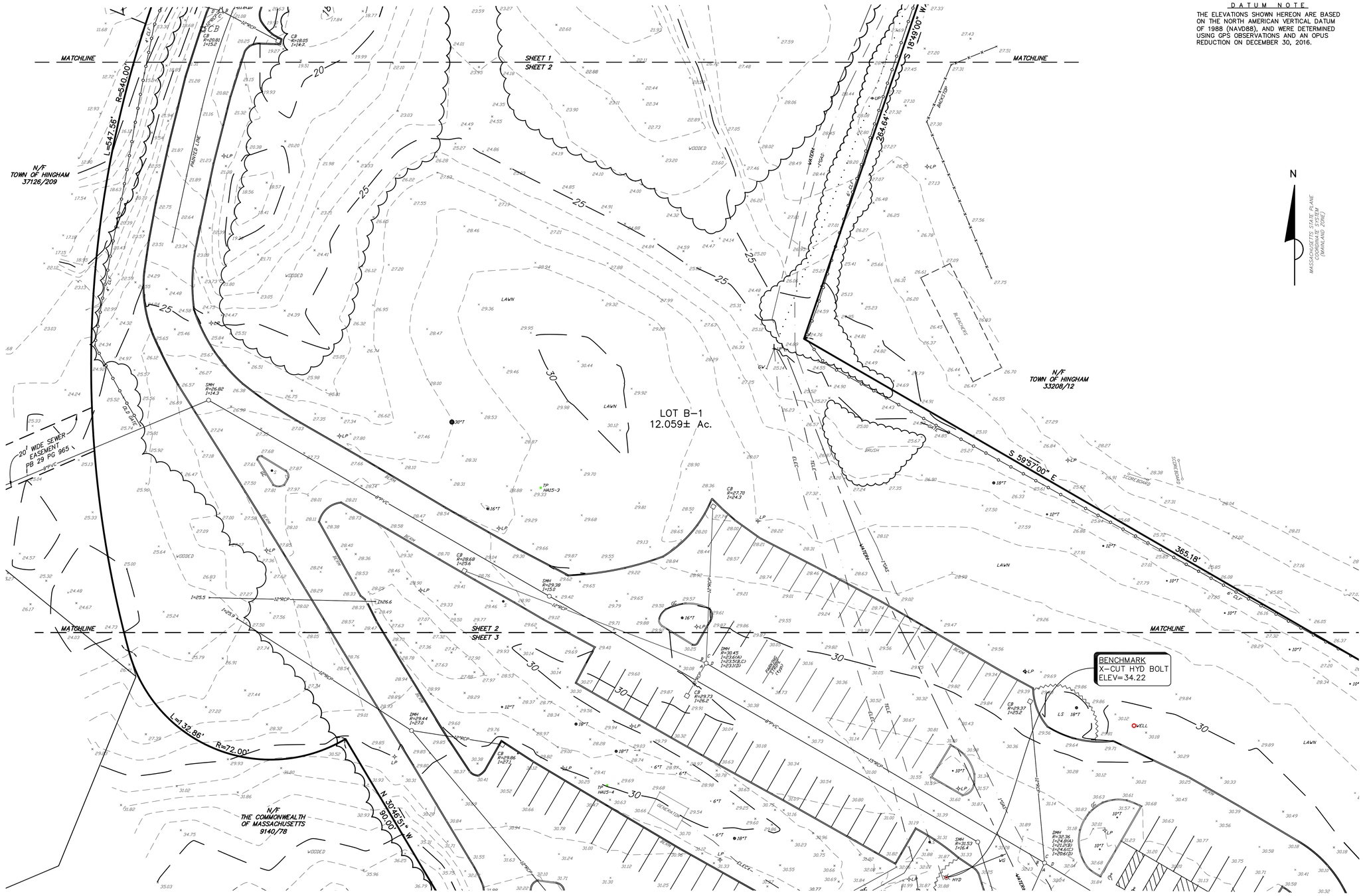

LEGEND:

BERM	BITUMINOUS CONCRETE BERM
BIT CONC	BITUMINOUS CONCRETE
BW	BARBED WIRE
CB	CATCH BASIN
CLF	CHAIN LINK FENCE
DMH	DRAIN MANHOLE
GC	GRANITE CURB
GW	GUY WIRE
I=	INVERT=
LP	LIGHT POLE
MC	METAL COVER
P	POST
R=	RIM=
RCP	REINFORCED CONCRETE PIPE
RET	RETAINING
S	SIGN
SMH	SEWER MANHOLE
TMH	TELEPHONE MANHOLE
TP	TEST PIT
TR	TRANSFORMER
UP	UTILITY POLE
WF	WETLAND FLAG
WG	WATER GATE

FLOOD NOTE

THE PARCEL SHOWN HEREON IS LOCATED IN ZONE X (UNSHADED) AND ZONE X (SHADED) AS SHOWN ON FLOOD INSURANCE RATE MAP No. 25023C0081J, EFFECTIVE DATE JULY 17, 2012.

UNDERGROUND UTILITIES WERE COMPILED FROM AVAILABLE RECORD PLANS OF UTILITY COMPANIES AND PUBLIC AGENCIES AND ARE APPROXIMATE ONLY. BEFORE DESIGN AND CONSTRUCTION CALL "DIG SAFE" 1-888-344-7233. SOME DATA IS CONFLICTING AND CAN ONLY BE VERIFIED BY EXCAVATION.

To: Alliance Realty Partners, LLC, Broadstone Bare Cove Alliance, LLC, Nutter McClennen & Fish LLP, Invesco Advisers, Inc., and its successors and assigns, Greenberg Traurig, P.A. and First American Title Insurance Company

This is to certify that this map or plat and the survey on which it is based were made in accordance with the 2016 Minimum Standard Detail Requirements for ALTA/NSPS Land Title Surveys, jointly established and adopted by ALTA and NSPS, and includes Items 2, 3, 4, 6a, 6b, 7a, 7b1, 7c, 8, 9, 11, 13, 14, 16, 17, 18, and 21 of Table A thereof. The field work was completed on July 26, 2017.

Michael A. Pustizzi, PLS
Registration No. 46505
In the Commonwealth of Massachusetts
Date of Survey: July 26, 2017
Date of Last Revision: August 31, 2017

COMMONWEALTH OF MASSACHUSETTS
MICHAEL A. PUSTIZZI
#46505
PROFESSIONAL LAND SURVEYOR

#230 BEAL STREET

EXISTING CONDITIONS PLAN IN HINGHAM, MA (PLYMOUTH COUNTY)

SCALE: 1"= 20' DATE: JULY 26, 2017

0 20 40 60 80 ft

Precision Land Surveying, Inc.
32 Turnpike Road
Southborough, Massachusetts 01772
TELE NO.: (508) 460-1789 FAX NO.:(508) 970-0096

4402TP1.DWG SHEET 2 OF 4

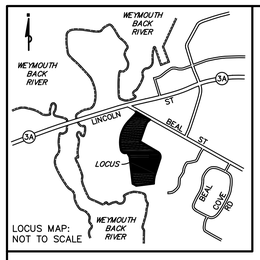

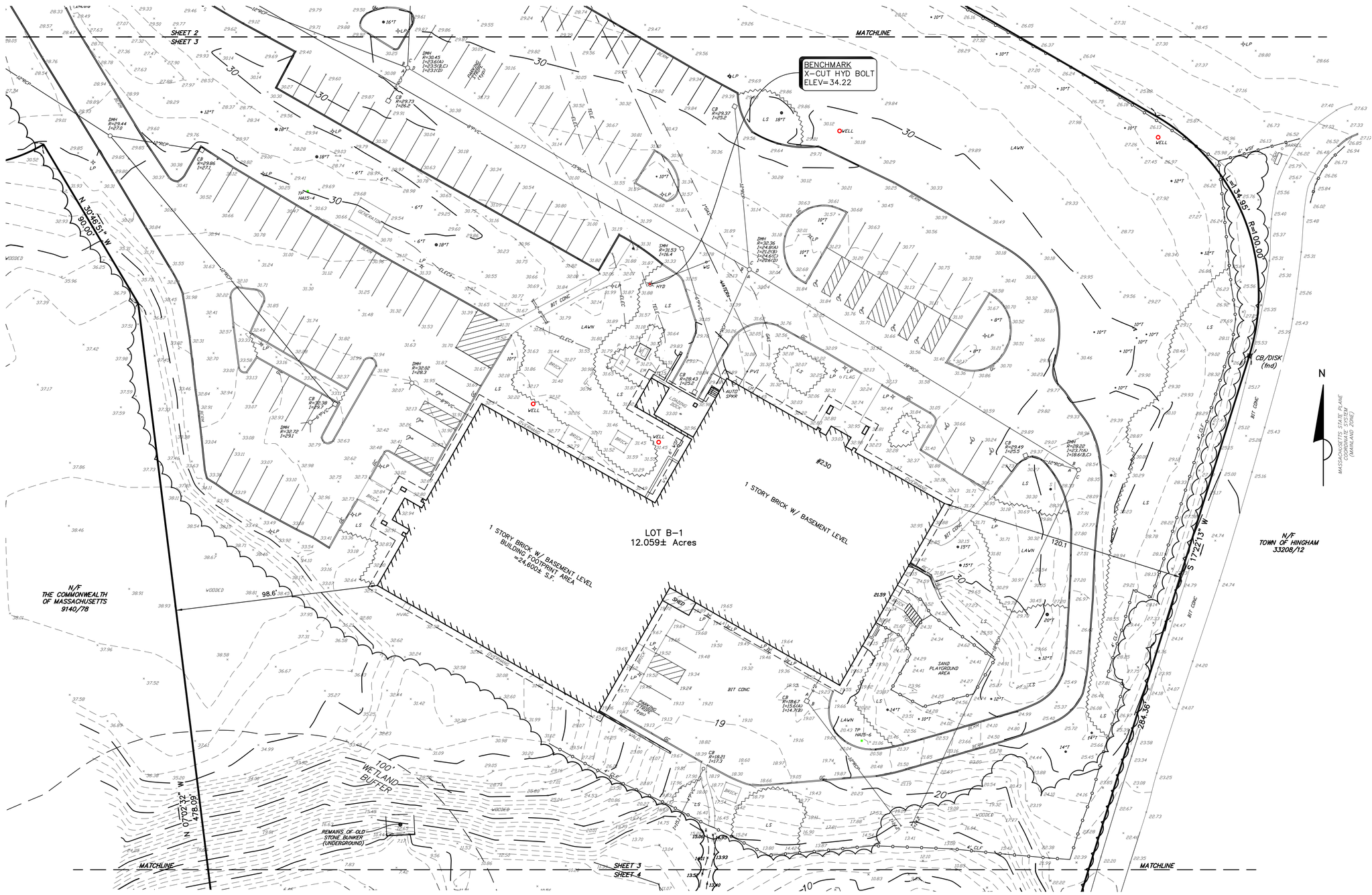

FLOOD NOTE

THE PARCEL SHOWN HEREON IS LOCATED IN ZONE X (UNSHADED) AND ZONE X (SHADED) AS SHOWN ON FLOOD INSURANCE RATE MAP No. 25023C0081J, EFFECTIVE DATE JULY 17, 2012.

DATUM NOTE

THE ELEVATIONS SHOWN HEREON ARE BASED ON THE NORTH AMERICAN VERTICAL DATUM OF 1988 (NAVD88), AND WERE DETERMINED USING GPS OBSERVATIONS AND AN OPUS REDUCTION ON DECEMBER 30, 2016.

LEGEND:

BERM	BITUMINOUS CONCRETE BERM
BIT CONC	BITUMINOUS CONCRETE
BW	BARBED WIRE
CB	CATCH BASIN
CLF	CHAIN LINK FENCE
DMH	DRAIN MANHOLE
GC	GRANITE CURB
GW	GUY WIRE
I=	INVERT=
LP	LIGHT POLE
MC	METAL COVER
P	POST
R=	RIM=
RCP	REINFORCED CONCRETE PIPE
RET	RETAINING
S	SIGN
SMH	SEWER MANHOLE
TMH	TELEPHONE MANHOLE
TP	TEST PIT
TR	TRANSFORMER
UP	UTILITY POLE
WF	WETLAND FLAG
WG	WATER GATE

UNDERGROUND UTILITIES WERE COMPILED FROM AVAILABLE RECORD PLANS OF UTILITY COMPANIES AND PUBLIC AGENCIES AND ARE APPROXIMATE ONLY. BEFORE DESIGN AND CONSTRUCTION CALL "DIG SAFE" 1-888-344-7233. SOME DATA IS CONFLICTING AND CAN ONLY BE VERIFIED BY EXCAVATION.

To: Alliance Realty Partners, LLC, Broadstone Bare Cove Alliance, LLC, Nutter McClennen & Fish LLP, Invesco Advisers, Inc., and its successors and assigns, Greenberg Traurig, P.A. and First American Title Insurance Company

This is to certify that this map or plat and the survey on which it is based were made in accordance with the 2016 Minimum Standard Detail Requirements for ALTA/NSPS Land Title Surveys, jointly established and adopted by ALTA and NSPS, and includes Items 2, 3, 4, 6a, 6b, 7a, 7b1, 7c, 8, 9, 11, 13, 14, 16, 17, 18, and 21 of Table A thereof. The field work was completed on July 26, 2017.

Michael A. Pustizzi, PLS
Registration No. 46505
In the Commonwealth of Massachusetts
Date of Survey: July 26, 2017
Date of Last Revision: August 31, 2017

COMMONWEALTH OF MASSACHUSETTS
MICHAEL A. PUSTIZZI
#46505
PROFESSIONAL LAND SURVEYOR

#230 BEAL STREET

EXISTING CONDITIONS PLAN
IN
HINGHAM, MA
(PLYMOUTH COUNTY)

SCALE: 1"= 20' DATE: JULY 26, 2017

0 20 40 60 80 ft

Precision Land Surveying, Inc.
32 Turnpike Road
Southborough, Massachusetts 01772
TELE NO.: (508) 460-1789 FAX NO.:(508) 970-0096

4402TP1.DWG SHEET 3 OF 4

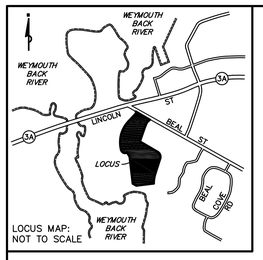

DATUM NOTE

THE ELEVATIONS SHOWN HEREON ARE BASED ON THE NORTH AMERICAN VERTICAL DATUM OF 1988 (NAVD88), AND WERE DETERMINED USING GPS OBSERVATIONS AND AN OPUS REDUCTION ON DECEMBER 30, 2016.

FLOOD NOTE

THE PARCEL SHOWN HEREON IS LOCATED IN ZONE X (UNSHADED) AND ZONE X (SHADED) AS SHOWN ON FLOOD INSURANCE RATE MAP No. 25023C0081J, EFFECTIVE DATE JULY 17, 2012.

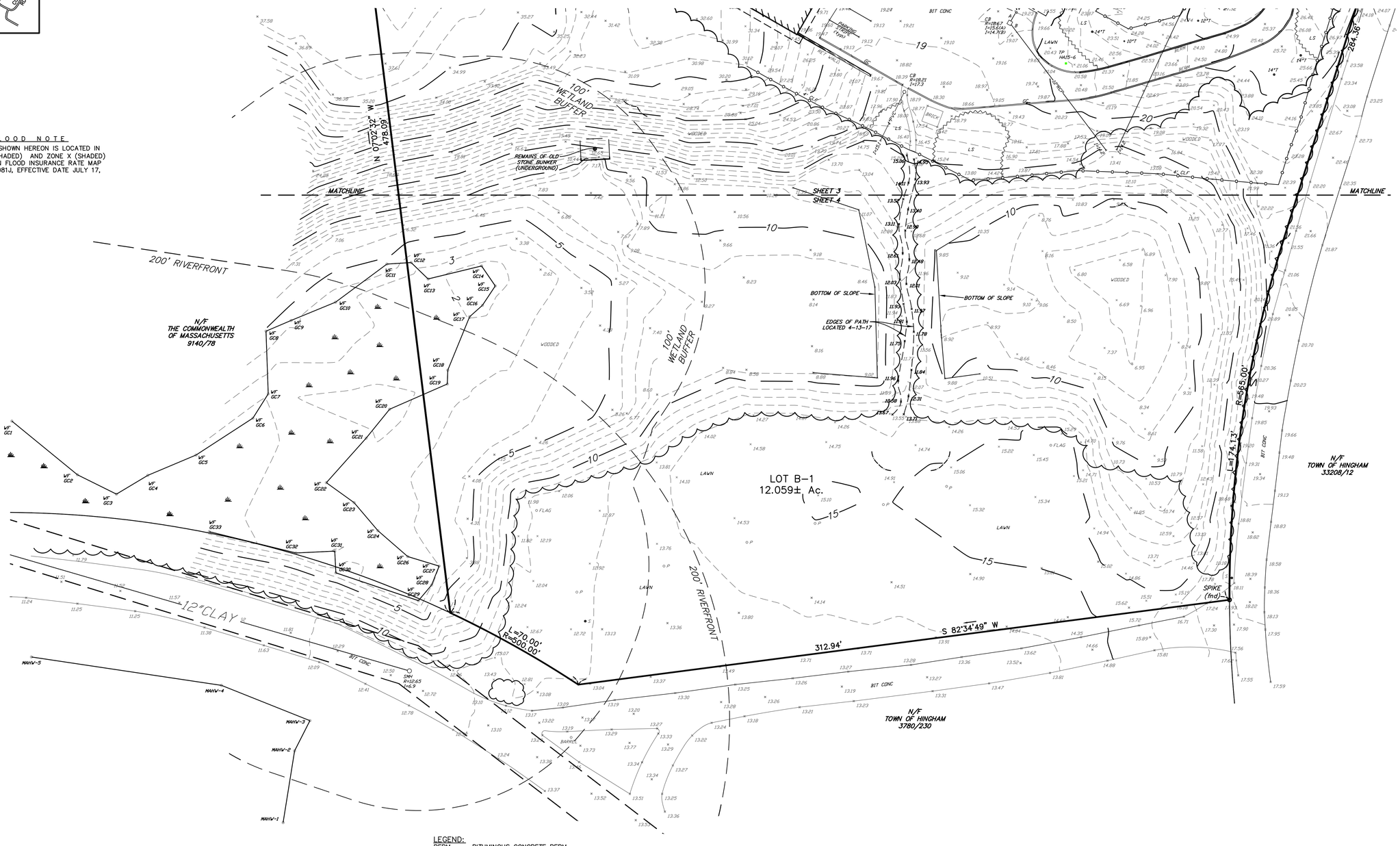

LEGEND:

BERM	BITUMINOUS CONCRETE BERM
BIT CONC	BITUMINOUS CONCRETE
BW	BARBED WIRE
CB	CATCH BASIN
CLF	CHAIN LINK FENCE
DMH	DRAIN MANHOLE
GC	GRANITE CURB
GW	GUY WIRE
I=	INVERT=
LP	LIGHT POLE
MC	METAL COVER
P	POST
R=	RIM=
RCP	REINFORCED CONCRETE PIPE
RET	RETAINING
S	SIGN
SMH	SEWER MANHOLE
TMH	TELEPHONE MANHOLE
TP	TEST PIT
TR	TRANSFORMER
UP	UTILITY POLE
WF	WETLAND FLAG
WG	WATER GATE

UNDERGROUND UTILITIES WERE COMPILED FROM AVAILABLE RECORD PLANS OF UTILITY COMPANIES AND PUBLIC AGENCIES AND ARE APPROXIMATE ONLY. BEFORE DESIGN AND CONSTRUCTION CALL "DIG SAFE" 1-888-344-7233. SOME DATA IS CONFLICTING AND CAN ONLY BE VERIFIED BY EXCAVATION.

To: Alliance Realty Partners, LLC, Broadstone Bare Cove Alliance, LLC, Nutter McClennen & Fish LLP, Invesco Advisers, Inc., and its successors and assigns, Greenberg Traurig, P.A. and First American Title Insurance Company

This is to certify that this map or plat and the survey on which it is based were made in accordance with the 2016 Minimum Standard Detail Requirements for ALTA/NSPS Land Title Surveys, jointly established and adopted by ALTA and NSPS, and includes items 2, 3, 4, 6a, 6b, 7a, 7b1, 7c, 8, 9, 11, 13, 14, 16, 17, 18, and 21 of Table A thereof. The field work was completed on July 26, 2017.

Michael A. Pustizzi, PLS
Registration No. 46505
In the Commonwealth of Massachusetts
Date of Survey: July 26, 2017
Date of Last Revision: August 31, 2017

COMMONWEALTH OF MASSACHUSETTS
MICHAEL A. PUSTIZZI
#46505
PROFESSIONAL LAND SURVEYOR

#230 BEAL STREET

EXISTING CONDITIONS PLAN IN HINGHAM, MA (PLYMOUTH COUNTY)

SCALE: 1"= 20' DATE: JULY 26, 2017

0 20 40 60 80 ft

Precision Land Surveying, Inc.
32 Turnpike Road
Southborough, Massachusetts 01772
TELE NO.: (508) 460-1789 FAX NO.:(508) 970-0096

4402TP1.DWG SHEET 4 OF 4

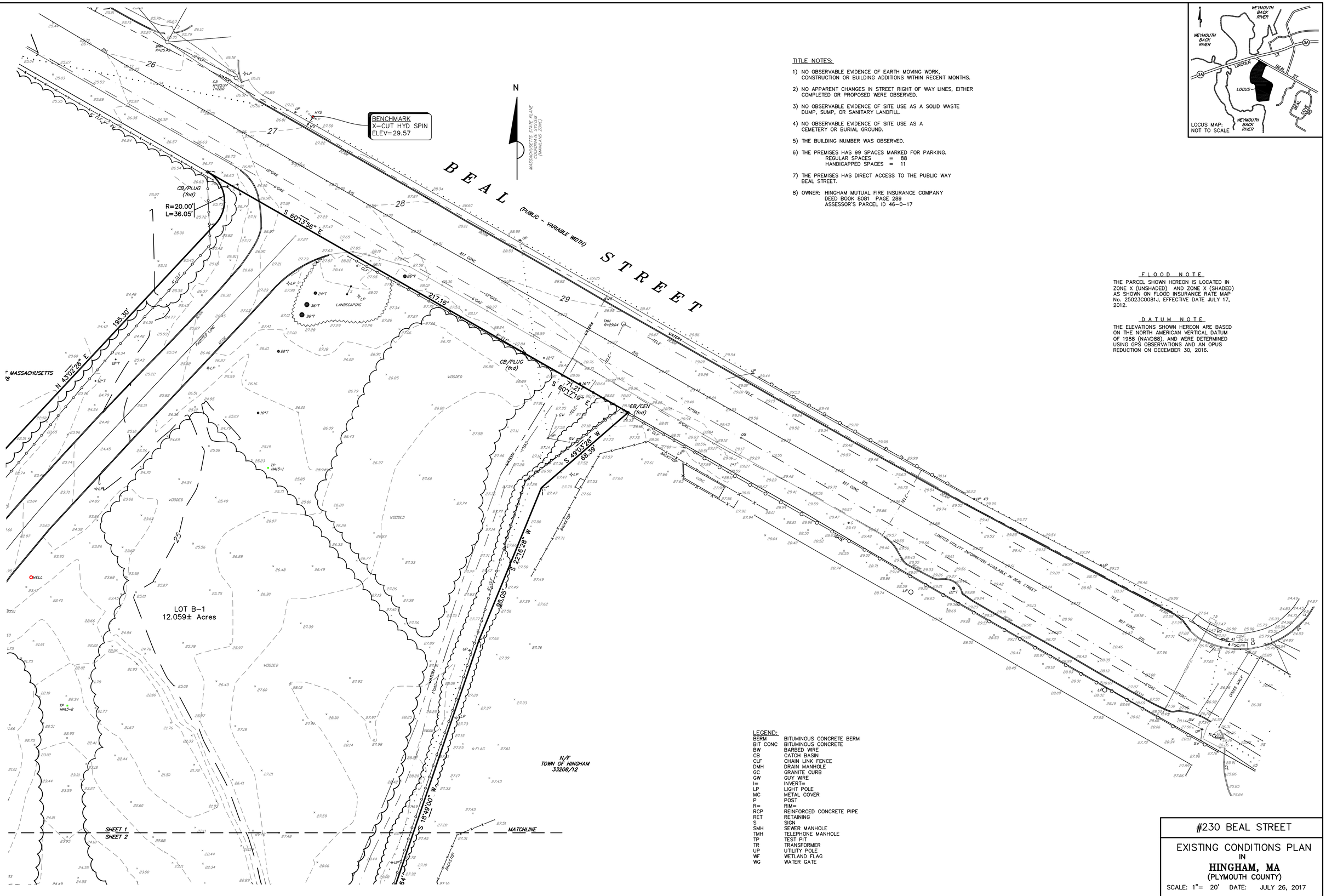

TITLE NOTES:

1) NO OBSERVABLE EVIDENCE OF EARTH MOVING WORK, CONSTRUCTION OR BUILDING ADDITIONS WITHIN RECENT MONTHS.

2) NO APPARENT CHANGES IN STREET RIGHT OF WAY LINES, EITHER COMPLETED OR PROPOSED WERE OBSERVED.

3) NO OBSERVABLE EVIDENCE OF SITE USE AS A SOLID WASTE DUMP, SUMP, OR SANITARY LANDFILL.

4) NO OBSERVABLE EVIDENCE OF SITE USE AS A CEMETERY OR BURIAL GROUND.

5) THE BUILDING NUMBER WAS OBSERVED.

6) THE PREMISES HAS 99 SPACES MARKED FOR PARKING.
REGULAR SPACES = 88
HANDICAPPED SPACES = 11

7) THE PREMISES HAS DIRECT ACCESS TO THE PUBLIC WAY BEAL STREET.

8) OWNER: HINGHAM MUTUAL FIRE INSURANCE COMPANY
DEED BOOK 8081 PAGE 289
ASSESSOR'S PARCEL ID 46-0-17

LOCUS MAP:
NOT TO SCALE

F L O O D N O T E

THE PARCEL SHOWN HEREON IS LOCATED IN ZONE X (UNSHADED) AND ZONE X (SHADED) AS SHOWN ON FLOOD INSURANCE RATE MAP No. 25023C0081J, EFFECTIVE DATE JULY 17, 2012.

D A T U M N O T E

THE ELEVATIONS SHOWN HEREON ARE BASED ON THE NORTH AMERICAN VERTICAL DATUM OF 1988 (NAVD88), AND WERE DETERMINED USING GPS OBSERVATIONS AND AN OPUS REDUCTION ON DECEMBER 30, 2016.

LEGEND:

BERM	BITUMINOUS CONCRETE BERM
BIT CONC	BITUMINOUS CONCRETE
BW	BARBED WIRE
CB	CATCH BASIN
CLF	CHAIN LINK FENCE
DMH	DRAIN MANHOLE
GC	GRANITE CURB
GW	GUY WIRE
I=	INVERT=
LP	LIGHT POLE
MC	METAL COVER
P	POST
R=	RIM=
RCP	REINFORCED CONCRETE PIPE
RET	RETAINING
S	SIGN
SMH	SEWER MANHOLE
TMH	TELEPHONE MANHOLE
TP	TEST PIT
TR	TRANSFORMER
UP	UTILITY POLE
WF	WETLAND FLAG
WG	WATER GATE

UNDERGROUND UTILITIES WERE COMPILED FROM AVAILABLE RECORD PLANS OF UTILITY COMPANIES AND PUBLIC AGENCIES AND ARE APPROXIMATE ONLY. BEFORE DESIGN AND CONSTRUCTION CALL "DIG SAFE" 1-888-344-7233. SOME DATA IS CONFLICTING AND CAN ONLY BE VERIFIED BY EXCAVATION.

#230 BEAL STREET

EXISTING CONDITIONS PLAN
IN
HINGHAM, MA
(PLYMOUTH COUNTY)

SCALE: 1"= 20' DATE: JULY 26, 2017

0 20 40 60 80 ft

Precision Land Surveying, Inc.
32 Turnpike Road
Southborough, Massachusetts 01772
TELE NO.: (508) 460-1789 FAX NO.:(508) 970-0096

4402TP1.DWG

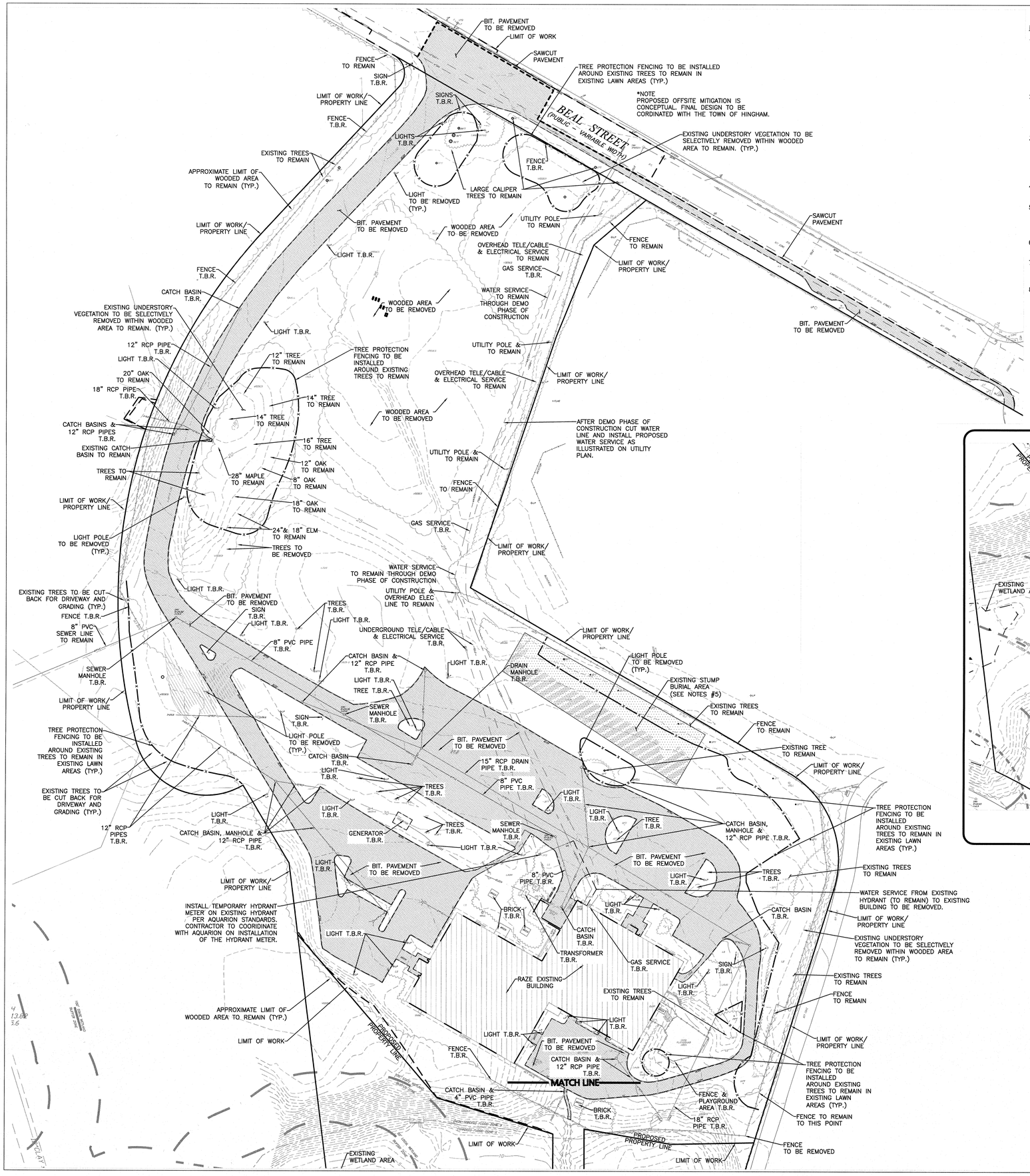

NOTES:

1. THE LOCATIONS OF EXISTING UNDERGROUND UTILITIES ARE SHOWN IN AN APPROXIMATE WAY ONLY AND HAVE NOT BEEN INDEPENDENTLY VERIFIED BY THE OWNER OR IT'S REPRESENTATIVE. THE CONTRACTOR SHALL DETERMINE THE EXACT LOCATION OF ALL EXISTING UTILITIES BEFORE COMMENCING WORK, AND AGREES TO BE FULLY RESPONSIBLE FOR ANY AND ALL DAMAGES WHICH MIGHT BE OCCASIONED BY THE CONTRACTOR'S FAILURE TO EXACTLY LOCATE AND PRESERVE ANY AND ALL UNDERGROUND UTILITIES.
2. THE INFORMATION SHOWN ON THIS PLAN IS THE SOLE PROPERTY OF ALLEN & MAJOR ASSOCIATES, INC. IT'S INTENDED USE IS TO PROVIDE INFORMATION. ANY ALTERATION, MISUSE, OR RECALCULATION OF INFORMATION OR DATA WITHOUT THE EXPRESSED, WRITTEN CONSENT OF ALLEN & MAJOR ASSOCIATES, INC. IS STRICTLY PROHIBITED.
3. THE CONTRACTOR SHALL CONTACT "DIGSAFE" AND THE TOWN OF HINGHAM DEPARTMENT OF PUBLIC WORKS (DPW) AT LEAST 72 HOURS PRIOR TO ANY EXCAVATION WORK TO REQUEST THE LOCATION OF THE EXISTING UTILITIES.

   DIGSAFE: 1-888-344-7233
   HINGHAM DPW: 781-741-1430
4. SEE ABBREVIATIONS AND NOTES PLAN, SHEET ABB-1 – ABB-3 FOR EROSION CONTROL NOTES.
5. THE CONTRACTOR SHALL REVIEW THE "LANDFILL COVER ASSESSMENT DATA REPORT," DATED OCTOBER 4, 2017 PREPARED BY HALEY AND ALDRICH. SPECIAL PRECAUTIONS SHALL BE TAKEN TO ENSURE THIS AREA IS NOT DISTURBED DURING CONSTRUCTION.
6. CONTRACTOR TO WALK THE SITE WITH OWNER'S REPRESENTATIVE PRIOR TO CONSTRUCTION TO VERIFY ALL TREES TO REMAIN.
7. ALL CUTTING AND CAPPING OF WATER MAINS AND SERVICES SHALL INCLUDE CAPPING IN BOTH DIRECTIONS SUCH THAT THERE ARE NO OPEN ENDED PIPES LEFT UNDERGROUND.
8. THIS PROJECT WILL REQUIRE AN ON-SITE PRESENCE OF A TRIBAL CULTURAL RESOURCE MONITOR DURING GROUND DISTURBING ACTIVITIES. THE CONTRACTOR SHALL CONTACT THE COMPLIANCE REVIEW SUPERVISOR WITH THE CONSTRUCTION SCHEDULE. IN THE EVENT THAT ARCHEOLOGICAL RESOURCES OR HUMAN REMAINS ARE FOUND DURING ANY POINT OF CONSTRUCTION, THE CONTRACTOR MUST CEASE ALL CONSTRUCTION ACTIVITY AND NOTIFY THE TRIBAL HISTORIC PRESERVATION OFFICE.

LEGEND:

- PROPERTY LINE
- BUILDING TO BE REMOVED
- SAWCUT PAVEMENT LINE
- LIMIT OF WORK
- TREE PROTECTION/FENCING
- PAVEMENT T.B.R.
- EXISTING WETLANDS
- EXISTING TREES TO REMAIN
- EDGE OF EXISTING TREES TO REMAIN
- 100-FOOT STATE JURISDICTIONAL WETLANDS BUFFER
- 50-FOOT LOCAL NO DISTURB WETLANDS BUFFER
- TO BE REMOVED T.B.R.

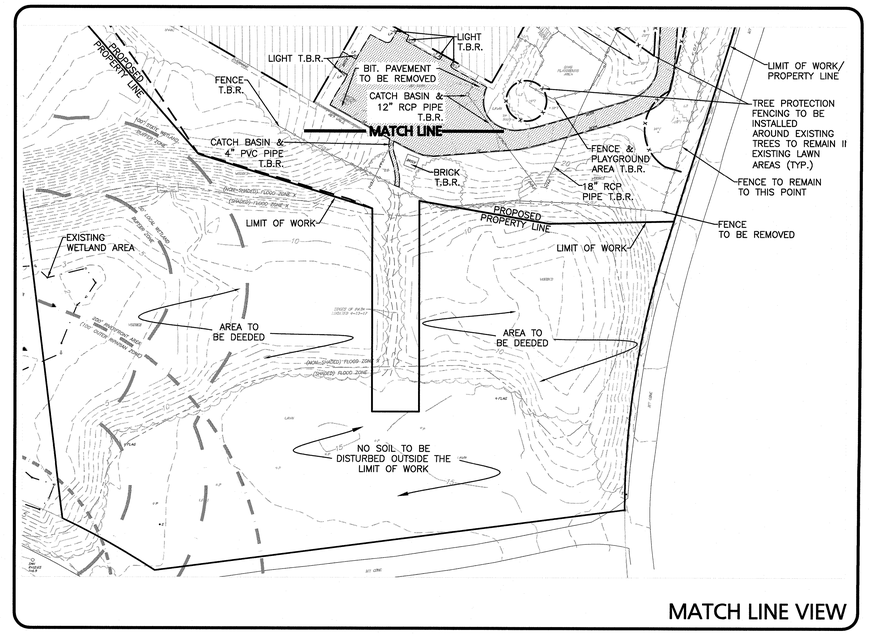

MATCH LINE VIEW

CUBE 3
architecture interiors planning
360 Merrimack Street Lawrence MA 01843
phone: 978.989.0900 www.cube3studio.com

project information:

BROADSTONE BARE COVE
HINGHAM
230 BEAL ST.
HINGHAM, MA

client information:

Broadstone Bare Cove Alliance, LLC.

C/O Alliance Residential Company
184 High Street Suite
401 Boston, MA 02110

consultant information:

Prepared by:
ALLEN & MAJOR ASSOCIATES, INC.
civil & structural engineering land surveying
environmental consulting landscape architecture
www.allenmajor.com
100 Cummings Center
Suite 407B
Beverly, MA 01915
TEL: (781) 935-6889
FAX: (781) 935-2896
WOBURN, MA • LAKEVILLE, MA • MANCHESTER, NH

issuance:

COMPREHENSIVE PERMIT APPLICATION PLANS
NOT FOR CONSTRUCTION

key plan:

drawing information:

drawing by:	SJL
drawing checked by:	CMQ
drawing scale:	1"=40'
drawing date:	12 AUGUST 2017
project number:	2118-02

drawing revisions:

No.	Description	Date
1	Issued for ZBA Resubmittal	10/25/16
2	Issued for ZBA Resubmittal	11/02/16
3	Issued for ZBA Resubmittal	01/04/17
4	Issued for ZBA Resubmittal	01/19/17
5	Issued for ZBA Resubmittal	02/14/17
6	Issued for ZBA Resubmittal	03/29/17
7	Issued for ZBA Resubmittal	04/11/17
8	Modifications to Project Plans	11/02/17

registration:

COMMONWEALTH OF MASSACHUSETTS
TIMOTHY J. WILLIAMS
CIVIL
No. 43119
REGISTERED PROFESSIONAL ENGINEER
11/2/17

PROFESSIONAL ENGINEER FOR ALLEN & MAJOR ASSOCIATES, INC.

GRAPHIC SCALE

40 0 20 40 80 160

(IN FEET)
1 inch = 40 ft.

drawing name:

DEMOLITION PLAN

drawing number:

C-1

N:\PROJECTS\2118-02\CIVIL\DRAWINGS\CURRENT\C-2118-02 – DEMOLITION.DWG

COPYRIGHT (C) 2017 CUBE 3 STUDIO LLC, ALL RIGHTS RESERVED

NOTES:

1. THE LOCATIONS OF EXISTING UNDERGROUND UTILITIES ARE SHOWN IN AN APPROXIMATE WAY ONLY AND HAVE NOT BEEN INDEPENDENTLY VERIFIED BY THE OWNER OR IT'S REPRESENTATIVE. THE CONTRACTOR SHALL DETERMINE THE EXACT LOCATION OF ALL EXISTING UTILITIES BEFORE COMMENCING WORK, AND AGREES TO BE FULLY RESPONSIBLE FOR ANY AND ALL DAMAGES WHICH MIGHT BE OCCASIONED BY THE CONTRACTOR'S FAILURE TO EXACTLY LOCATE AND PRESERVE ANY AND ALL UNDERGROUND UTILITIES.
2. THE INFORMATION SHOWN ON THIS PLAN IS THE SOLE PROPERTY OF ALLEN & MAJOR ASSOCIATES, INC. IT'S INTENDED USE IS TO PROVIDE INFORMATION. ANY ALTERATION, MISUSE, OR RECALCULATION OF INFORMATION OR DATA WITHOUT THE EXPRESSED, WRITTEN CONSENT OF ALLEN & MAJOR ASSOCIATES, INC. IS STRICTLY PROHIBITED.
3. THE CONTRACTOR SHALL CONTACT "DIGSAFE" AND THE TOWN OF HINGHAM DEPARTMENT OF PUBLIC WORKS AT LEAST 72 HOURS PRIOR TO ANY EXCAVATION WORK TO REQUEST THE LOCATION OF THE EXISTING UTILITIES.

   DIGSAFE: 1-800-344-7233
   HINGHAM DEPT. OF PUBLIC WORKS: 1-781-741-1430
4. SEE THE ABBREVIATIONS AND NOTES PLAN AND DETAILS FOR FURTHER INFORMATION.
5. ALL CURBING RADII SHALL BE 3' UNLESS OTHERWISE NOTED.
6. THE CONTRACTOR SHALL REVIEW THE "LANDFILL COVER ASSESSMENT DATA REPORT," DATED OCTOBER 4, 2017 BY HALEY AND ALDRICH. SPECIAL PRECAUTIONS SHALL BE TAKEN TO ENSURE THIS AREA IS NOT DISTURBED DURING CONSTRUCTION.
7. TOWN OF HINGHAM SPORTS FIELD INFORMATION IS BASED ON RECORD PLANS.
8. ALL SIGNS AND PAVEMENT MARKINGS WITHIN THE PROJECT SITE SHALL CONFORM TO THE APPLICABLE SPECIFICATIONS OF THE MANUAL OF UNIFORM TRAFFIC CONTROL DEVICES (MUTCD).
9. SEE DETAIL SHEET D-1 FOR SIGN TABLE.
10. PER FIRE DEPARTMENT REQUIREMENTS, ALL CURBING LOCATED ON-SITE TO BE SLOPED. MATERIAL SHALL BE PRE-CAST SLOPED CONCRETE CURB (SEE DETAILS).
11. ALL SURFACE PARKING STALL AREAS AND DRIVE AISLES SHALL BE STANDARD DUTY PAVEMENT UNLESS OTHERWISE SPECIFIED. ANY PAVEMENT LOCATED WITHIN THE LANDFILL AREA SHALL BE HEAVY DUTY PAVEMENT, AND SHALL BE LINED WITH A GEO-TEXTILE FILTER FABRIC. SEE DETAILS FOR STANDARD AND HEAVY DUTY PAVEMENT SECTIONS.

LEGEND:

PROP. PROPERTY LINE
SIGN
BOLLARD
BUILDING
BUILDING ARCHITECTURE
BUILDING INTERIOR WALLS
CURB
RETAINING WALL
PARKING STRIPING
ROADWAY STRIPING
TRAFFIC ARROWS
HEAVY DUTY PAVEMENT (TRUCK TRAFFIC AREAS)
HEAVY DUTY PAVEMENT (LANDFILL AREA)
HEAVY DUTY CONCRETE
SIDEWALK
GRASSPAVE2 SURFACE
GRAVEL FIRE ACCESS ROAD
ADA ACCESSIBLE RAMP
ADA DET. WARNING SURFACE
TRANSFORMER
PARKING COUNT
SNOW STORAGE
WOOD GUARDRAIL
FENCE (TYPE TBD)
GARAGE BELOW
LIMIT OF WORK

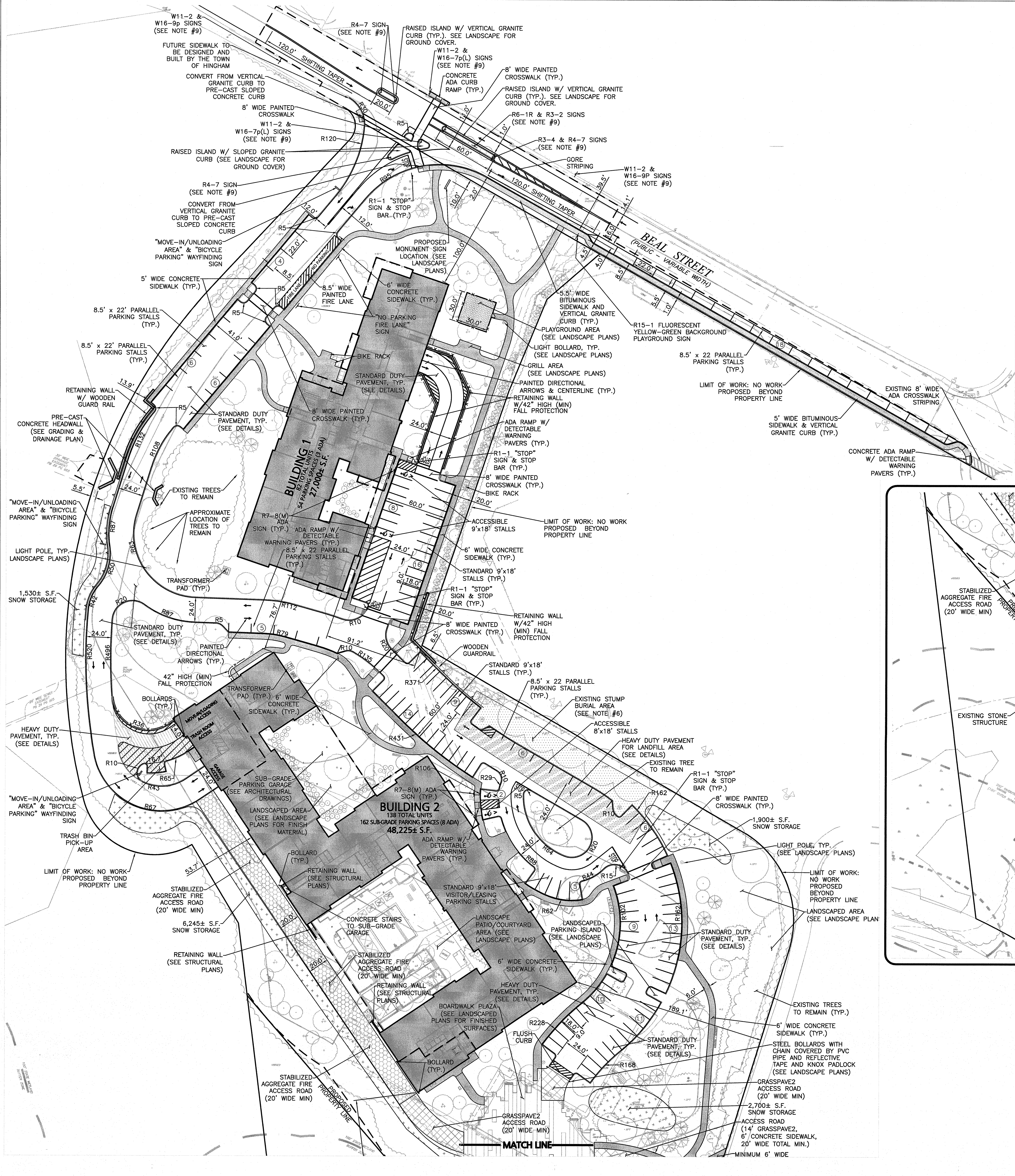

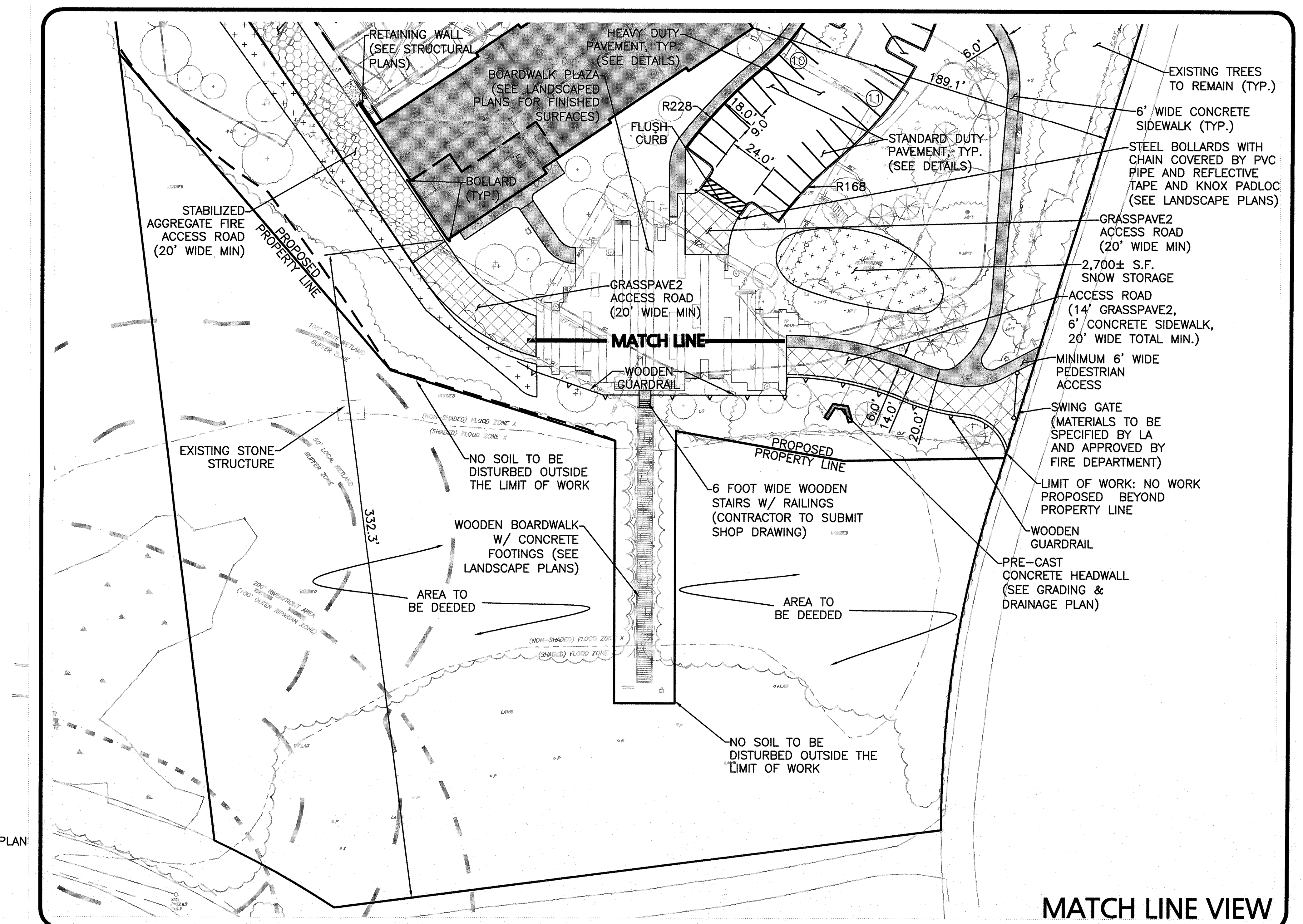

CUBE 3
architecture interiors planning
360 Merrimack Street Lawrence MA 01843
phone: 978.989.9900 www.cube3studio.com

project information:
BROADSTONE BARE COVE HINGHAM
230 BEAL ST.
HINGHAM, MA

client information:
Broadstone Bare Cove Alliance, LLC.

C/O Alliance Residential Company
184 High Street Suite 401 Boston, MA 02110

consultant information:
PREPARED BY:
ALLEN & MAJOR ASSOCIATES, INC.
civil & structural engineering • land surveying
environmental consulting • landscape architecture
www.allenmajor.com
100 COMMERCE WAY
WOBURN MA 01801
TEL: (781) 935-6889
FAX: (781) 935-2896
WOBURN, MA • LAKEVILLE, MA • MANCHESTER, NH

issuance:
COMPREHENSIVE PERMIT APPLICATION PLANS
NOT FOR CONSTRUCTION

key plan:

drawing information:

drawing by:	SJL
drawing checked by:	CMQ
drawing scale:	1"=40'
drawing date:	12 AUGUST 2017
project number:	2118-02

drawing revisions:

No.	Description	Date
1	Issued for ZBA Resubmittal	10/25/16
2	Issued for ZBA Resubmittal	11/02/16
3	Issued for ZBA Resubmittal	01/04/17
4	Issued for ZBA Resubmittal	01/19/17
5	Issued for ZBA Resubmittal	02/14/17
6	Issued for ZBA Resubmittal	03/29/17
7	Issued for ZBA Resubmittal	04/11/17
8	Modifications to Project Plans	11/02/17

registration:

COMMONWEALTH OF MASSACHUSETTS
TIMOTHY J. WILLIAMS
CIVIL
No.43119
REGISTERED PROFESSIONAL ENGINEER
11/2/17

PROFESSIONAL ENGINEER FOR ALLEN & MAJOR ASSOCIATES, INC.

GRAPHIC SCALE
40 0 20 40 80 160
(IN FEET)
1 inch = 40 ft.

drawing name:
LAYOUT & MATERIALS PLAN

drawing number:
C-2

N:\PROJECTS\2118-02\CIVIL\DRAWINGS\CURRENT\C-2118-02 - LAYOUT & MATERIALS.DWG

COPYRIGHT (C) 2017 CUBE 3 STUDIO LLC, ALL RIGHTS RESERVED

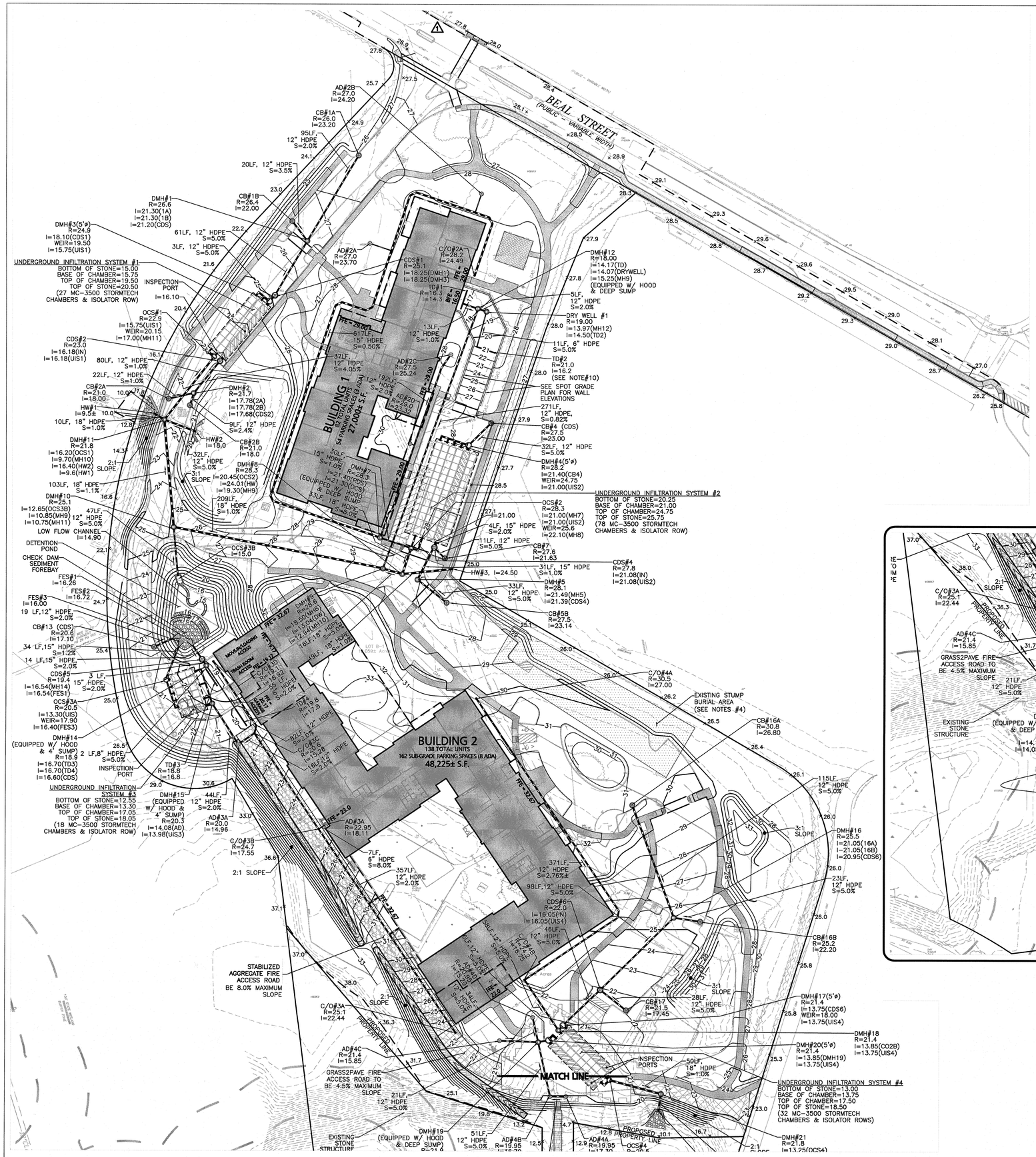

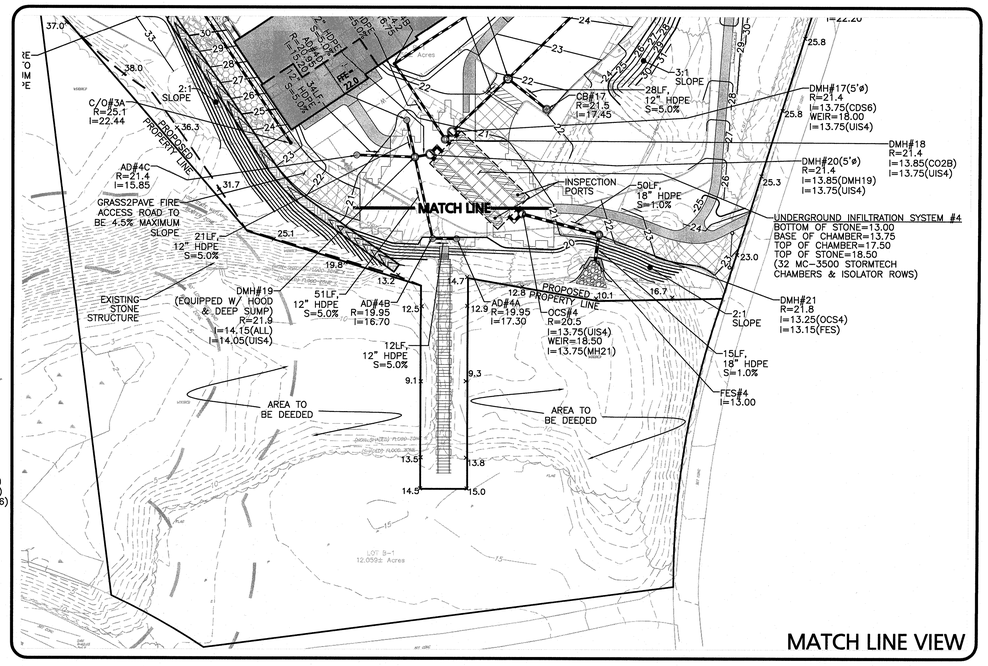

MATCH LINE VIEW

LEGEND:

- DRAIN MANHOLE (DMH)
- OUTLET CONTROL STRUCTURE (OCS)
- CONTECH CDS UNIT (CDS)
- STORAGE TANK
- PUMP CHAMBER
- CATCH BASIN (CB)
- AREA DRAIN (AD)
- CLEAN OUT (CO)
- FLARED END SECTION (FES)
- DRAIN LINE
- RIPRAP OUTFALL
- HEADWALL
- 5' CONTOUR — 30
- 1' CONTOUR — 31
- SPOT GRADE ×128
- LIMIT OF INFILTRATION STONE
- INFILTRATION CHAMBERS
- ISOLATOR ROW
- DRAINAGE SWALE
- LIMIT OF WORK LINE

NOTES:

1. THE LOCATIONS OF EXISTING UNDERGROUND UTILITIES ARE SHOWN IN AN APPROXIMATE WAY ONLY AND HAVE NOT BEEN INDEPENDENTLY VERIFIED BY THE OWNER OR IT'S REPRESENTATIVE. THE CONTRACTOR SHALL DETERMINE THE EXACT LOCATION OF ALL EXISTING UTILITIES BEFORE COMMENCING WORK, AND AGREES TO BE FULLY RESPONSIBLE FOR ANY AND ALL DAMAGES WHICH MIGHT BE OCCASIONED BY THE CONTRACTOR'S FAILURE TO EXACTLY LOCATE AND PRESERVE ANY AND ALL UNDERGROUND UTILITIES.
2. THE INFORMATION SHOWN ON THIS PLAN IS THE SOLE PROPERTY OF ALLEN & MAJOR ASSOCIATES, INC. IT'S INTENDED USE IS TO PROVIDE INFORMATION. ANY ALTERATION, MISUSE, OR RECALCULATION OF INFORMATION OR DATA WITHOUT THE EXPRESSED, WRITTEN CONSENT OF ALLEN & MAJOR ASSOCIATES, INC. IS STRICTLY PROHIBITED.
3. THE CONTRACTOR SHALL CONTACT "DIGSAFE" AND THE AT LEAST 72 HOURS PRIOR TO ANY EXCAVATION WORK TO REQUEST THE LOCATION OF THE EXISTING UTILITIES. DIGSAFE: 1-888-344-7233.
4. THE CONTRACTOR SHALL REVIEW THE "LANDFILL COVER ASSESSMENT DATA REPORT," DATED OCTOBER 4, 2017 BY HALEY AND ALDRICH. SPECIAL PRECAUTIONS SHALL BE TAKEN TO ENSURE THIS AREA IS NOT DISTURBED DURING CONSTRUCTION.
5. PIPE DIMENSIONS ARE MEASURED FROM THE INSIDE FACE OF THE STRUCTURE.
6. THE SIZE AND LOCATION OF EXISTING ROOF LEADERS SHALL BE CONFIRMED BY THE CONTRACTOR IN THE FIELD.
7. ALL AREA DRAIN PIPES SHALL BE 8" HDPE UNLESS OTHERWISE SPECIFIED ON THIS PLAN.
8. THE ELEVATIONS ON THIS PLAN ARE BASED ON THE NORTH AMERICAN VERTICAL DATUM OF 1988 (NAVD88). SEE EXISTING CONDITIONS PLANS.
9. SPOT GRADE ELEVATIONS LOCATED AT THE LIMIT OF WORK LINE ARE EXISTING SPOT GRADE ELEVATIONS. FOR PROPOSED SPOT GRADES, SEE SPOT GRADE PLANS (SHEETS C-3B & C-3C).
10. TRENCH DRAIN #2 (TD#2) SHALL USE A DROP CONNECTION IN ORDER TO PROVIDE AMPLE CLEARANCE BETWEEN THE FINISHED PAVEMENT AND THE 6" PVC PIPE RUNNING TO THE DRY WELL.
11. THIS PROJECT WILL REQUIRE AN ON-SITE PRESENCE OF A TRIBAL CULTURAL RESOURCE MONITOR DURING GROUND DISTURBING ACTIVITIES. THE CONTRACTOR SHALL CONTACT THE COMPLIANCE REVIEW SUPERVISOR WITH THE CONSTRUCTION SCHEDULE. IN THE EVENT THAT ARCHEOLOGICAL RESOURCES OR HUMAN REMAINS ARE FOUND DURING ANY POINT OF CONSTRUCTION, THE CONTRACTOR MUST CEASE ALL CONSTRUCTION ACTIVITY AND NOTIFY THE TRIBAL HISTORIC PRESERVATION OFFICE.

BENCHMARK SUMMARY		
TBM #	DESCRIPTION	ELEV.
1	X CUT IN HYDRANT SPINDLE	29.57

COMMONWEALTH OF MASSACHUSETTS
TIMOTHY J. WILLIAMS
CIVIL
No. 43119
REGISTERED PROFESSIONAL ENGINEER
11/6/17

PROFESSIONAL ENGINEER FOR
ALLEN & MAJOR ASSOCIATES, INC.

GRAPHIC SCALE
40 0 20 40 80 160
(IN FEET)
1 inch = 40 ft.

N:\PROJECTS\2118-02\CIVIL\DRAWINGS\CURRENT\C-2118-02 - GRADING & DRAINAGE.DWG

CUBE 3
architecture interiors planning
360 Merrimack Street Lawrence MA 01843
phone: 978.989.9900 www.cube3studio.com

project information:
BROADSTONE BARE COVE
HINGHAM
230 BEAL ST.
HINGHAM, MA

client information:
Broadstone Bare Cove Alliance, LLC.

C/O Alliance Residential Company
184 High Street Suite
401 Boston, MA 02110

consultant information:
Prepared by:
ALLEN & MAJOR ASSOCIATES, INC.
CIVIL & STRUCTURAL ENGINEERING • LAND SURVEYING
ENVIRONMENTAL ENGINEERING • LANDSCAPE ARCHITECTURE
SITE DEVELOPMENT PLANNING
100 COMMERCIAL WAY
PLYMOUTH, MA 02360
TEL: (781) 951-0893
FAX: (781) 951-0896
WORCESTER, MA • LAKEVILLE, MA • MANCHESTER, NH

issuance:
COMPREHENSIVE PERMIT APPLICATION PLANS
NOT FOR CONSTRUCTION

key plan:

drawing information:

drawing by:	SJL
drawing checked by:	CMQ
drawing scale:	1"=40'
drawing date:	12 AUGUST 2017
project number:	2118-02

drawing revisions:

No.	Description	Date
1	Issued for ZBA Resubmittal	10/25/16
2	Issued for ZBA Resubmittal	11/02/16
3	Issued for ZBA Resubmittal	01/04/17
4	Issued for ZBA Resubmittal	01/19/17
5	Issued for ZBA Resubmittal	02/14/17
6	Issued for ZBA Resubmittal	03/29/17
7	Issued for ZBA Resubmittal	04/11/17
8	Modifications to Project Plans	11/02/17

registration:

drawing name:
GRADING & DRAINAGE PLAN

drawing number:
C-3A

COPYRIGHT (C) 2017 CUBE 3 STUDIO LLC, ALL RIGHTS RESERVED

NOTES:

1. THE LOCATIONS OF EXISTING UNDERGROUND UTILITIES ARE SHOWN IN AN APPROXIMATE WAY ONLY AND HAVE NOT BEEN INDEPENDENTLY VERIFIED BY THE OWNER OR IT'S REPRESENTATIVE. THE CONTRACTOR SHALL DETERMINE THE EXACT LOCATION OF ALL EXISTING UTILITIES BEFORE COMMENCING WORK, AND AGREES TO BE FULLY RESPONSIBLE FOR ANY AND ALL DAMAGES WHICH MIGHT BE OCCASIONED BY THE CONTRACTOR'S FAILURE TO EXACTLY LOCATE AND PRESERVE ANY AND ALL UNDERGROUND UTILITIES.
2. THE INFORMATION SHOWN ON THIS PLAN IS THE SOLE PROPERTY OF ALLEN & MAJOR ASSOCIATES, INC. IT'S INTENDED USE IS TO PROVIDE INFORMATION. ANY ALTERATION, MISUSE, OR RECALCULATION OF INFORMATION OR DATA WITHOUT THE EXPRESSED, WRITTEN CONSENT OF ALLEN & MAJOR ASSOCIATES, INC. IS STRICTLY PROHIBITED.
3. PIPE DIMENSIONS ARE MEASURED FROM THE INSIDE FACE OF THE STRUCTURE.
4. ALL SIDEWALKS, WALKWAYS, AND CROSSWALKS SHALL BE CONSTRUCTED WITH A MAXIMUM RUNNING SLOPE OF 4.50% (0.50±%) AND A MAXIMUM CROSS SLOPE OF 1.50% (0.50±%).
5. PATIO AREAS AND AREAS WHERE WALKING PATHS CONVERGE (HATCHED AREAS) SHALL HAVE A MAXIMUM SLOPE OF 1.50% (0.50±%) IN ANY DIRECTION.
6. THE CONTRACTOR SHALL CONTACT "DIGSAFE" AND THE AT LEAST 72 HOURS PRIOR TO ANY EXCAVATION WORK TO REQUEST THE LOCATION OF THE EXISTING UTILITIES. DIGSAFE: 1-888-344-7233

LEGEND:

1' CONTOUR	171
5' CONTOUR	170
SPOT GRADE	×128
ADA PARKING/ACCESS MAX SLOPE=1.5%(±0.5%) IN ALL DIRECTIONS	
TOP OF CURB	TC
BOTTOM OF CURB	BC
TOP OF WALL	T.O.W.
BOTTOM OF WALL	B.O.W.

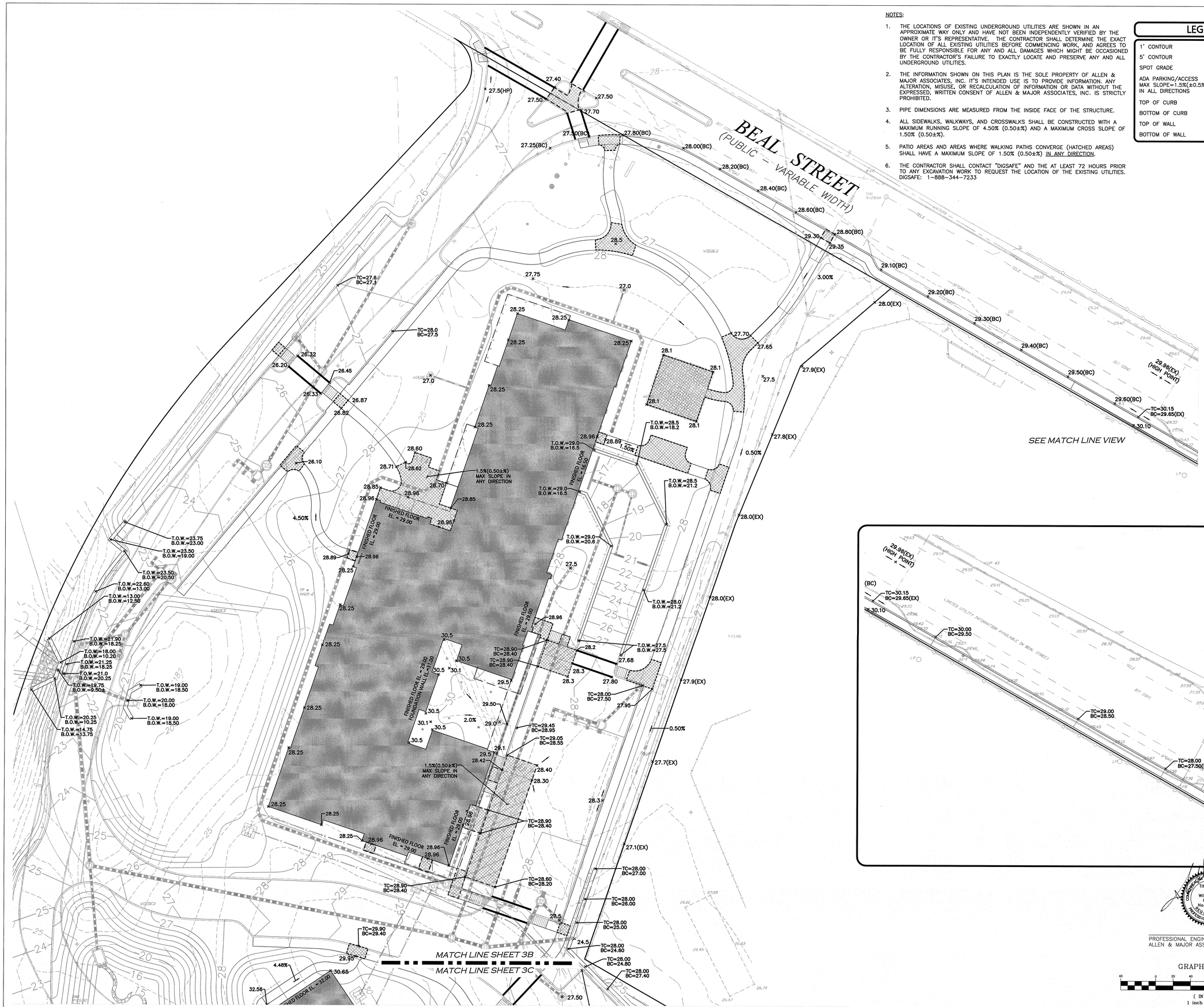

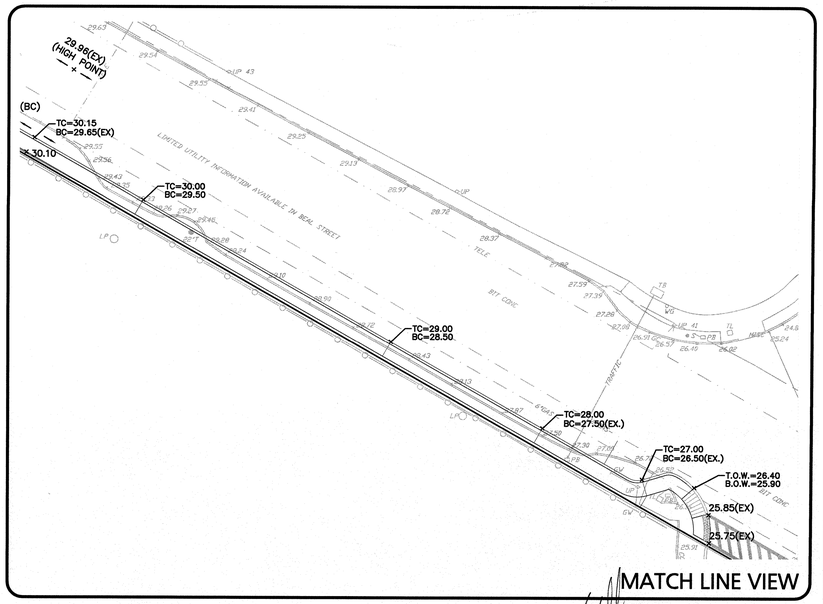

MATCH LINE VIEW

COMMONWEALTH OF MASSACHUSETTS
TIMOTHY J. WILLIAMS
CIVIL
No.43119
REGISTERED PROFESSIONAL ENGINEER
11/2/17

PROFESSIONAL ENGINEER FOR
ALLEN & MAJOR ASSOCIATES, INC.

GRAPHIC SCALE

40 0 20 40 80 160

(IN FEET)
1 inch = 40 ft.

N:\PROJECTS\2118-02\CIVIL\DRAWINGS\CURRENT\C-2118-02 - SPOT GRADES.DWG

CUBE 3
architecture interiors planning
300 Merrimack Street Lawrence MA 01843
phone: 978.989.9900 www.cube3studio.com

project information:

BROADSTONE BARE COVE HINGHAM
230 BEAL ST.
HINGHAM, MA

client information:

Broadstone Bare Cove Alliance, LLC.

C/O Alliance Residential Company
184 High Street Suite 401 Boston, MA 02110

consultant information:

Prepared by:
ALLEN & MAJOR ASSOCIATES, INC.
civil & structural engineering & land surveying
environmental consultants landscape architects
www.allenmajor.com
100 Grossman Drive
Braintree MA 02184
TEL: (781) 935-6889
FAX: (781) 935-2896
WOBURN, MA • LAKEVILLE, MA • MANCHESTER, NH

issuance:

COMPREHENSIVE PERMIT APPLICATION PLANS
NOT FOR CONSTRUCTION

key plan:

drawing information:

drawing by:	SJL
drawing checked by:	CMQ
drawing scale:	1"=40'
drawing date:	12 AUGUST 2017
project number:	2118-02

drawing revisions:

No.	Description	Date
1	Issued for ZBA Resubmittal	10/25/16
2	Issued for ZBA Resubmittal	11/02/16
3	Issued for ZBA Resubmittal	01/04/17
4	Issued for ZBA Resubmittal	01/19/17
5	Issued for ZBA Resubmittal	02/14/17
6	Issued for ZBA Resubmittal	03/29/17
7	Issued for ZBA Resubmittal	04/11/17
8	Modifications to Project Plans	11/02/17

registration:

drawing name:

BUILDING 1
SPOT GRADE
PLAN

drawing number:

C-3B

COPYRIGHT (C) 2017 CUBE 3 STUDIO LLC, ALL RIGHTS RESERVED

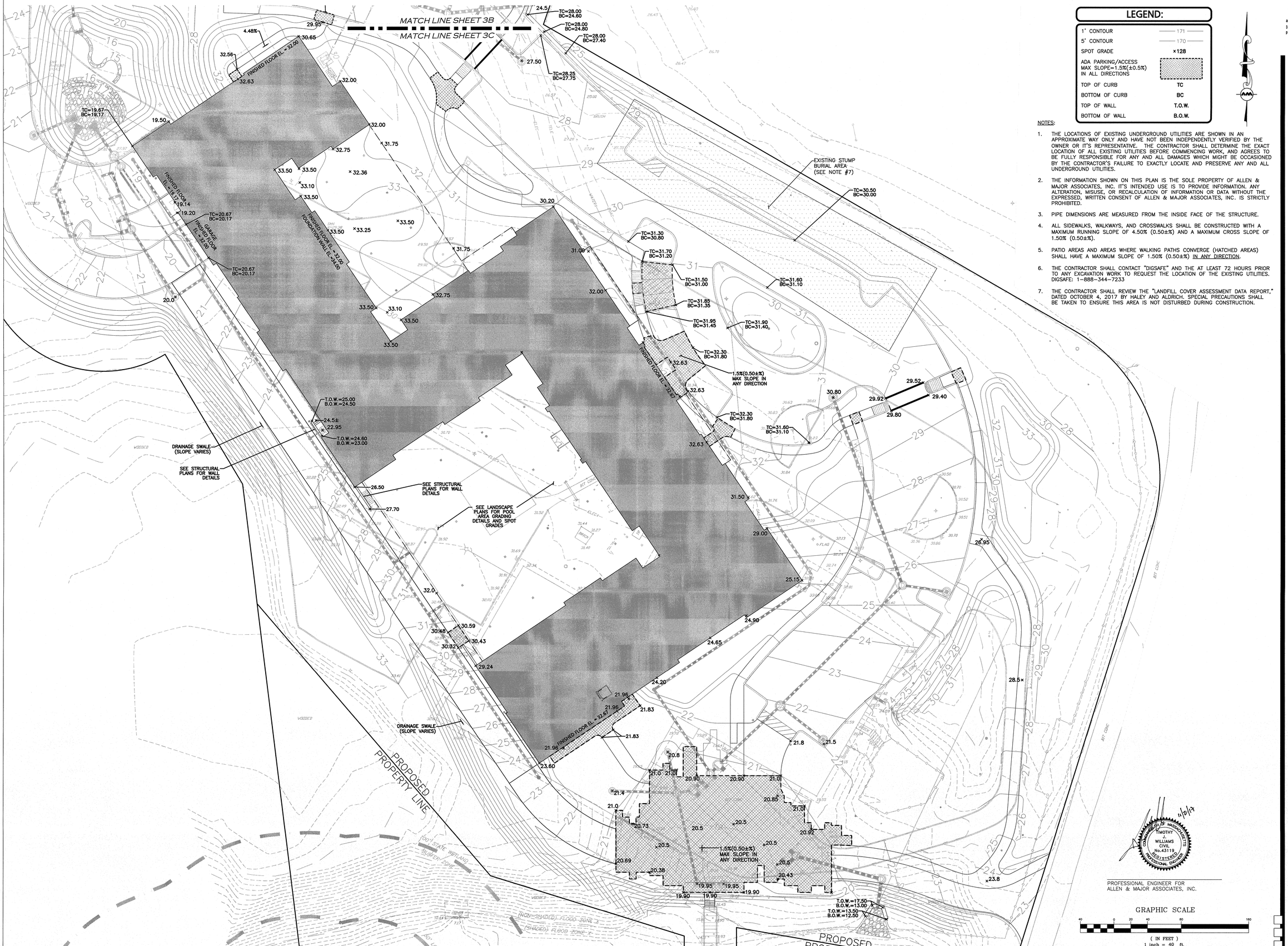

LEGEND:

1' CONTOUR	171
5' CONTOUR	170
SPOT GRADE	×128
ADA PARKING/ACCESS MAX SLOPE=1.5%(±0.5%) IN ALL DIRECTIONS	
TOP OF CURB	TC
BOTTOM OF CURB	BC
TOP OF WALL	T.O.W.
BOTTOM OF WALL	B.O.W.

NOTES:

1. THE LOCATIONS OF EXISTING UNDERGROUND UTILITIES ARE SHOWN IN AN APPROXIMATE WAY ONLY AND HAVE NOT BEEN INDEPENDENTLY VERIFIED BY THE OWNER OR IT'S REPRESENTATIVE. THE CONTRACTOR SHALL DETERMINE THE EXACT LOCATION OF ALL EXISTING UTILITIES BEFORE COMMENCING WORK, AND AGREES TO BE FULLY RESPONSIBLE FOR ANY AND ALL DAMAGES WHICH MIGHT BE OCCASIONED BY THE CONTRACTOR'S FAILURE TO EXACTLY LOCATE AND PRESERVE ANY AND ALL UNDERGROUND UTILITIES.
2. THE INFORMATION SHOWN ON THIS PLAN IS THE SOLE PROPERTY OF ALLEN & MAJOR ASSOCIATES, INC. IT'S INTENDED USE IS TO PROVIDE INFORMATION. ANY ALTERATION, MISUSE, OR RECALCULATION OF INFORMATION OR DATA WITHOUT THE EXPRESSED, WRITTEN CONSENT OF ALLEN & MAJOR ASSOCIATES, INC. IS STRICTLY PROHIBITED.
3. PIPE DIMENSIONS ARE MEASURED FROM THE INSIDE FACE OF THE STRUCTURE.
4. ALL SIDEWALKS, WALKWAYS, AND CROSSWALKS SHALL BE CONSTRUCTED WITH A MAXIMUM RUNNING SLOPE OF 4.50% (0.50±%) AND A MAXIMUM CROSS SLOPE OF 1.50% (0.50±%).
5. PATIO AREAS AND AREAS WHERE WALKING PATHS CONVERGE (HATCHED AREAS) SHALL HAVE A MAXIMUM SLOPE OF 1.50% (0.50±%) IN ANY DIRECTION.
6. THE CONTRACTOR SHALL CONTACT "DIGSAFE" AND THE AT LEAST 72 HOURS PRIOR TO ANY EXCAVATION WORK TO REQUEST THE LOCATION OF THE EXISTING UTILITIES. DIGSAFE: 1-888-344-7233
7. THE CONTRACTOR SHALL REVIEW THE "LANDFILL COVER ASSESSMENT DATA REPORT," DATED OCTOBER 4, 2017 BY HALEY AND ALDRICH. SPECIAL PRECAUTIONS SHALL BE TAKEN TO ENSURE THIS AREA IS NOT DISTURBED DURING CONSTRUCTION.

PROFESSIONAL ENGINEER FOR ALLEN & MAJOR ASSOCIATES, INC.

GRAPHIC SCALE

(IN FEET)
1 inch = 40 ft.

N:\PROJECTS\2118-02\CIVIL\DRAWINGS\CURRENT\C-2118-02 - SPOT GRADES.DWG

CUBE 3
architecture interiors planning
360 Merrimack Street Lawrence MA 01843
phone: 978.989.9900 www.cube3studio.com

project information:

BROADSTONE BARE COVE
HINGHAM
230 BEAL ST.
HINGHAM, MA

client information:

Broadstone Bare Cove Alliance, LLC.

C/O Alliance Residential Company
184 High Street Suite
401 Boston, MA 02110

consultant information:

Prepared by:
ALLEN & MAJOR ASSOCIATES, INC.
civil & structural engineering • land surveying
environmental consulting• landscape architecture
www.allenmajor.com
100 Grove Street
Worcester, MA 01605
TEL: (781) 935-6889
FAX: (781) 935-2896

WORCESTER, MA • LAKEVILLE, MA • MANCHESTER, NH

issuance:

COMPREHENSIVE PERMIT APPLICATION PLANS
NOT FOR CONSTRUCTION

key plan:

drawing information:

drawing by:	SJL
drawing checked by:	CMQ
drawing scale:	1"=40'
drawing date:	12 AUGUST 2017
project number:	2118-02

drawing revisions:

No.	Description	Date
1	Issued for ZBA Resubmittal	10/25/16
2	Issued for ZBA Resubmittal	11/02/16
3	Issued for ZBA Resubmittal	01/04/17
4	Issued for ZBA Resubmittal	01/19/17
5	Issued for ZBA Resubmittal	02/14/17
6	Issued for ZBA Resubmittal	03/29/17
7	Issued for ZBA Resubmittal	04/11/17
8	Modifications to Project Plans	11/02/17

registration:

COMMONWEALTH OF MASSACHUSETTS
TIMOTHY J. WILLIAMS
CIVIL
No. 43119
REGISTERED PROFESSIONAL ENGINEER
11/2/17

drawing title:

BUILDING 2
SPOT GRADE
PLAN

drawing number:

C-3C

COPYRIGHT (C) 2017 CUBE 3 STUDIO LLC, ALL RIGHTS RESERVED

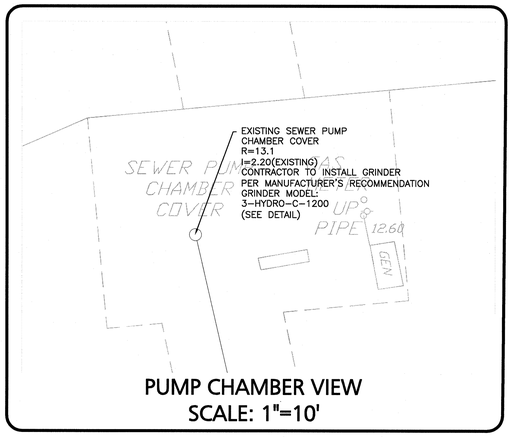

PUMP CHAMBER VIEW
SCALE: 1"=10'

LEGEND:

SEWER MANHOLE (SMH)	
SEWER CLEANOUT (CO)	
OIL/WATER SEPARATOR (OWS)	
SEWER VENT	
SEWER LINE	
WATER SERVICE	—W—
POST INDICATOR VALVE (PIV)	
FIRE DEPT. CONNECTION	▼FDC
WATER VALVE (WV)	
HYDRANT	
WATER LINE REDUCER	
GAS LINE	—GAS—
GAS VALVE	

NOTES:

1. THE LOCATIONS OF EXISTING UNDERGROUND UTILITIES ARE SHOWN IN AN APPROXIMATE WAY ONLY AND HAVE NOT BEEN INDEPENDENTLY VERIFIED BY THE OWNER OR IT'S REPRESENTATIVE. THE CONTRACTOR SHALL DETERMINE THE EXACT LOCATION OF ALL EXISTING UTILITIES BEFORE COMMENCING WORK, AND AGREES TO BE FULLY RESPONSIBLE FOR ANY AND ALL DAMAGES WHICH MIGHT BE OCCASIONED BY THE CONTRACTOR'S FAILURE TO EXACTLY LOCATE AND PRESERVE ANY AND ALL UNDERGROUND UTILITIES.
2. THE INFORMATION SHOWN ON THIS PLAN IS THE SOLE PROPERTY OF ALLEN & MAJOR ASSOCIATES, INC. IT'S INTENDED USE IS TO PROVIDE INFORMATION. ANY ALTERATION, MISUSE, OR RECALCULATION OF INFORMATION OR DATA WITHOUT THE EXPRESSED, WRITTEN CONSENT OF ALLEN & MAJOR ASSOCIATES, INC. IS STRICTLY PROHIBITED.
3. GAS SERVICE SIZE AND LOCATION SHALL BE DETERMINED BY SERVICE PROVIDER.
4. FIRE & DOMESTIC WATER SERVICE SIZE TO BE CONFIRMED BY MEP ENGINEER.
5. CONTRACTOR TO VERIFY WITH ENGINEER, IN WRITING, THAT EXISTING MANHOLE CAN BE MODIFIED AS ILLUSTRATED PRIOR TO START OF CONSTRUCTION.
6. THE CONTRACTOR SHALL REVIEW THE "LANDFILL COVER ASSESSMENT DATA REPORT," DATED OCTOBER 4, 2017 BY HALEY AND ALDRICH. SPECIAL PRECAUTIONS SHALL BE TAKEN TO ENSURE THIS AREA IS NOT DISTURBED DURING CONSTRUCTION.
7. ALL WATER MAINS TO BE DUCTILE IRON PIPE, CLASS 52.
8. ALL WATER MAIN WORK SHALL BE COORDINATED WITH AQUARION WATER COMPANY. ONLY AQUARION WATER COMPANY PERSONNEL SHALL OPERATE VALVES, SERVICES, AND HYDRANTS.
9. CONTRACTOR IS RESPONSIBLE FOR THE REPAIR AND/OR REPLACEMENT OF ALL EXISTING WATER INFRASTRUCTURE SCHEDULED TO REMAIN IN SERVICE WHICH IS DAMAGED OR AFFECTED BY THE PROPOSED CONSTRUCTION WORK.
10. ALL PROPOSED WATER MAINS SHALL CONFORM WITH AQUARION WATER COMPANY VERTICAL AND HORIZONTAL SEPARATION REQUIREMENTS FROM EXISTING UTILITIES.
11. ALL WATER UTILITY MATERIALS AND APPURTENANCES SHALL CONFORM TO AQUARION WATER COMPANY SPECIFICATIONS AND REQUIREMENTS. REFER TO ABBREVIATION AND NOTES FOR ADDITIONAL INFORMATION.
12. THIS PROJECT WILL REQUIRE AN ON-SITE PRESENCE OF A TRIBAL CULTURAL RESOURCE MONITOR DURING GROUND DISTURBING ACTIVITES. THE CONTRACTOR SHALL CONTACT THE COMPLIANCE REVIEW SUPERVISOR WITH THE CONSTRUCTION SCHEDULE. IN THE EVENT THAT ARCHEOLOGICAL RESOURCES OR HUMAN REMAINS ARE FOUND DURING ANY POINT OF CONSTRUCTION, THE CONTRACTOR MUST CEASE ALL CONSTRUCTION ACTIVITY AND NOTIFY THE TRIBAL HISTORIC PRESERVATION OFFICE.

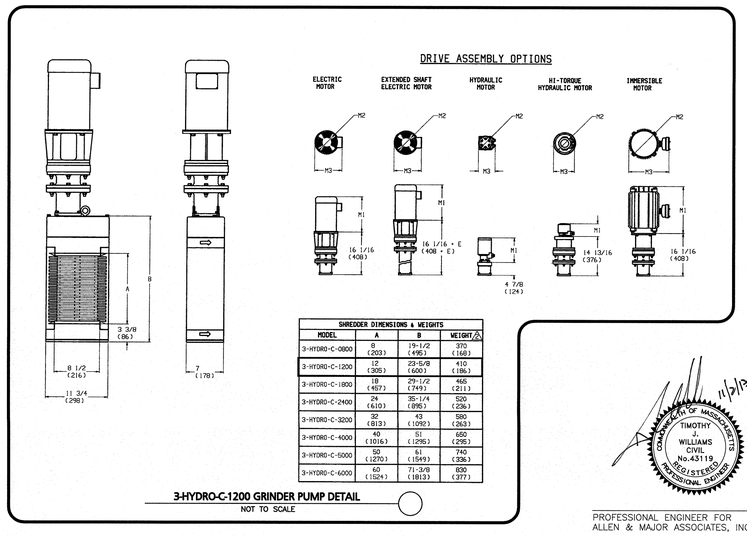

SHREDDER DIMENSIONS & WEIGHTS			
MODEL	A	B	WEIGHT
3-HYDRO-C-0800	8 (203)	19-1/2 (495)	370 (168)
3-HYDRO-C-1200	12 (305)	23-5/8 (600)	410 (186)
3-HYDRO-C-1800	18 (457)	29-1/2 (749)	465 (211)
3-HYDRO-C-2400	24 (610)	35-1/4 (895)	520 (236)
3-HYDRO-C-3200	32 (813)	43 (1092)	580 (263)
3-HYDRO-C-4000	40 (1016)	51 (1295)	650 (295)
3-HYDRO-C-5000	50 (1270)	61 (1549)	740 (336)
3-HYDRO-C-6000	60 (1524)	71-3/8 (1813)	830 (377)

3-HYDRO-C-1200 GRINDER PUMP DETAIL
NOT TO SCALE

COMMONWEALTH OF MASSACHUSETTS
TIMOTHY J. WILLIAMS
CIVIL
No.43119
REGISTERED PROFESSIONAL ENGINEER
11/9/17

PROFESSIONAL ENGINEER FOR ALLEN & MAJOR ASSOCIATES, INC.

GRAPHIC SCALE
40 0 20 40 80 160
(IN FEET)
1 inch = 40 ft.

N:\PROJECTS\2118-02\CIVIL\DRAWINGS\CURRENT\C-2118-02 - UTILITIES.DWG

CUBE 3
architecture interiors planning
360 Merrimack Street Lawrence MA 01843
phone: 978.989.0000 www.cube3studio.com

project information:
BROADSTONE BARE COVE
HINGHAM
230 BEAL ST.
HINGHAM, MA

client information:
Broadstone Bare Cove Alliance, LLC.

C/O Alliance Residential Company
184 High Street Suite
401 Boston, MA 02110

consultant information:
PREPARED BY
ALLEN & MAJOR ASSOCIATES, INC.
civil & structural engineering • land surveying
environmental consulting• landscape architecture
www.allenmajor.com
100 Grossman Drive
Braintree MA 02184
TEL: (781) 843-0889
FAX: (781) 843-2896
WOBURN, MA • LAKEVILLE, MA • MANCHESTER, NH

issuance:
COMPREHENSIVE PERMIT APPLICATION PLANS
NOT FOR CONSTRUCTION

key plan:

drawing information:

drawing by:	SJL
drawing checked by:	CMQ
drawing scale:	1"=40'
drawing date:	12 AUGUST 2017
project number:	2118-02

drawing revisions:

No.	Description	Date
1	Issued for ZBA Resubmittal	10/25/16
2	Issued for ZBA Resubmittal	11/02/16
3	Issued for ZBA Resubmittal	01/04/17
4	Issued for ZBA Resubmittal	01/19/17
5	Issued for ZBA Resubmittal	02/14/17
6	Issued for ZBA Resubmittal	03/29/17
7	Issued for ZBA Resubmittal	04/11/17
8	Modifications to Project Plans	11/02/17

registration:

drawing name:
UTILITY PLAN

drawing number:
C-4

COPYRIGHT (C) 2017 CUBE 3 STUDIO LLC, ALL RIGHTS RESERVED

LEGEND:

EXISTING UTILITY POLE	
HAND HOLE	
ELECTRICAL CONDUIT	—E——E—
TELE/CABLE CONDUIT	—T-C——T-C—
EXISTING OVER HEAD WIRE	—OHW—

NOTES:

1. THE CONTRACTOR IS SPECIFICALLY CAUTIONED THAT THE LOCATION AND/OR ELEVATION OF EXISTING UTILITIES AND STRUCTURES AS SHOWN ON THESE PLANS IS BASED ON RECORDS OF VARIOUS UTILITY COMPANIES AND WHERE POSSIBLE, MEASUREMENTS TAKEN IN THE FIELD. THIS INFORMATION IS NOT TO BE RELIED ON AS BEING EXACT OR COMPLETE. THE LOCATION OF ALL UNDERGROUND UTILITIES AND STRUCTURES SHALL BE VERIFIED IN THE FIELD BY THE CONTRACTOR PRIOR TO THE START OF CONSTRUCTION. THE CONTRACTOR MUST CONTACT THE APPROPRIATE UTILITY COMPANY, AND GOVERNING PERMITTING AUTHORITY, AND "DIGSAFE" AT LEAST 72 HOURS PRIOR TO ANY EXCAVATION WORK TO REQUEST EXACT FIELD LOCATION OF UTILITIES AND THE ENGINEER SHALL BE NOTIFIED IN WRITING OF ANY UTILITIES INTERFERING WITH THE PROPOSED CONSTRUCTION AND APPROPRIATE REMEDIAL ACTION TAKEN BEFORE PROCEEDING WITH THE WORK. IT SHALL BE THE RESPONSIBILITY OF THE CONTRACTOR TO RELOCATE ALL EXISTING UTILITIES WHICH CONFLICT WITH THE PROPOSED IMPROVEMENTS SHOWN ON THE PLANS.
2. THE INFORMATION SHOWN ON THIS PLAN IS THE SOLE PROPERTY OF ALLEN & MAJOR ASSOCIATES, INC. IT'S INTENDED USE IS TO PROVIDE INFORMATION. ANY ALTERATION, MISUSE, OR RECALCULATION OF INFORMATION OR DATA WITHOUT THE EXPRESSED, WRITTEN CONSENT OF ALLEN & MAJOR ASSOCIATES, INC. IS STRICTLY PROHIBITED.
3. ELECTRIC AND TELECOMMUNICATIONS LINES ARE SHOWN FOR COORDINATION PURPOSES ONLY. FINAL LOCATION OF TRANSFORMERS OR UNDERGROUND ELECTRIC AND TELE/DATA LINES SHALL BE DETERMINED BY THE UTILITY PROVIDER.
4. THE CONTRACTOR SHALL REVIEW THE "LANDFILL COVER ASSESSMENT DATA REPORT," DATED OCTOBER 4, 2017 BY HALEY AND ALDRICH. SPECIAL PRECAUTIONS SHALL BE TAKEN TO ENSURE THAT THIS AREA IS NOT DISTURBED DURING CONSTRUCTION.
5. THE CONTRACTOR SHALL REVIEW THE MEP PLANS FOR EXACT SIZE AND LOCATION OF ALL CONDUITS.

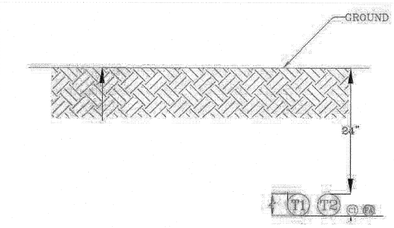

4 Ductbank "B-B" Detail
NOT TO SCALE

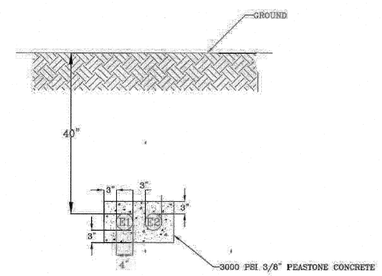

5 Ductbank "C-C" Detail
NOT TO SCALE

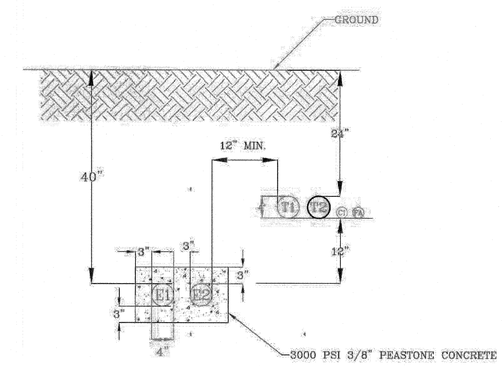

1 Ductbank "A-A" Detail
NOT TO SCALE

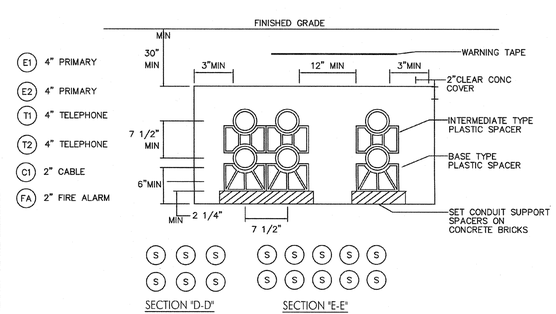

6 Ductbank "D-D" & "E-E" Detail
NOT TO SCALE

11/2/17

COMMONWEALTH OF MASSACHUSETTS
TIMOTHY J. WILLIAMS
CIVIL
No. 43119
REGISTERED PROFESSIONAL ENGINEER

PROFESSIONAL ENGINEER FOR
ALLEN & MAJOR ASSOCIATES, INC.

GRAPHIC SCALE

40 0 20 40 80 160

(IN FEET)
1 inch = 40 ft.

N:\PROJECTS\2118-02\CIVIL\DRAWINGS\CURRENT\C-2118-02 - ELECTRICAL.DWG

CUBE 3
architecture interiors planning
360 Merrimack Street Lawrence MA 01843
phone: 978.989.9900 www.cube3studio.com

project information:

BROADSTONE
BARE COVE
HINGHAM
230 BEAL ST.
HINGHAM, MA

client information:

Broadstone Bare
Cove Alliance, LLC.

C/O Alliance
Residential Company
184 High Street Suite
401 Boston, MA 02110

consultant information:

PREPARED BY:
ALLEN & MAJOR ASSOCIATES, INC.
civil & structural engineering • land surveying
environmental consultant landscape architecture
P R O J E C T M A N A G E M E N T
100 COMMERCE WAY
WOBURN MA 01801
PHONE: (781) 935-6068
FAX: (781) 935-8090
W O B U R N , M A ■ D A N V E R S , M A ■ M A N C H E S T E R , N H

issuance:

COMPREHENSIVE
PERMIT
APPLICATION PLANS
NOT FOR
CONSTRUCTION

key plan:

drawing information:

drawing by:	SJL
drawing checked by:	CMQ
drawing scale:	1"=40'
drawing date:	12 AUGUST 2017
project number:	2118-02

drawing revisions:

No.	Description	Date
1	Issued for ZBA Resubmittal	10/25/16
2	Issued for ZBA Resubmittal	11/02/16
3	Issued for ZBA Resubmittal	01/04/17
4	Issued for ZBA Resubmittal	01/19/17
5	Issued for ZBA Resubmittal	02/14/17
6	Issued for ZBA Resubmittal	03/29/17
7	Issued for ZBA Resubmittal	04/11/17
8	Modifications to Project Plans	11/02/17

registration:

drawing name:

ELECTRICAL
PLAN

drawing number:

C-5

COPYRIGHT (C) 2017 CUBE 3 STUDIO LLC, ALL RIGHTS RESERVED

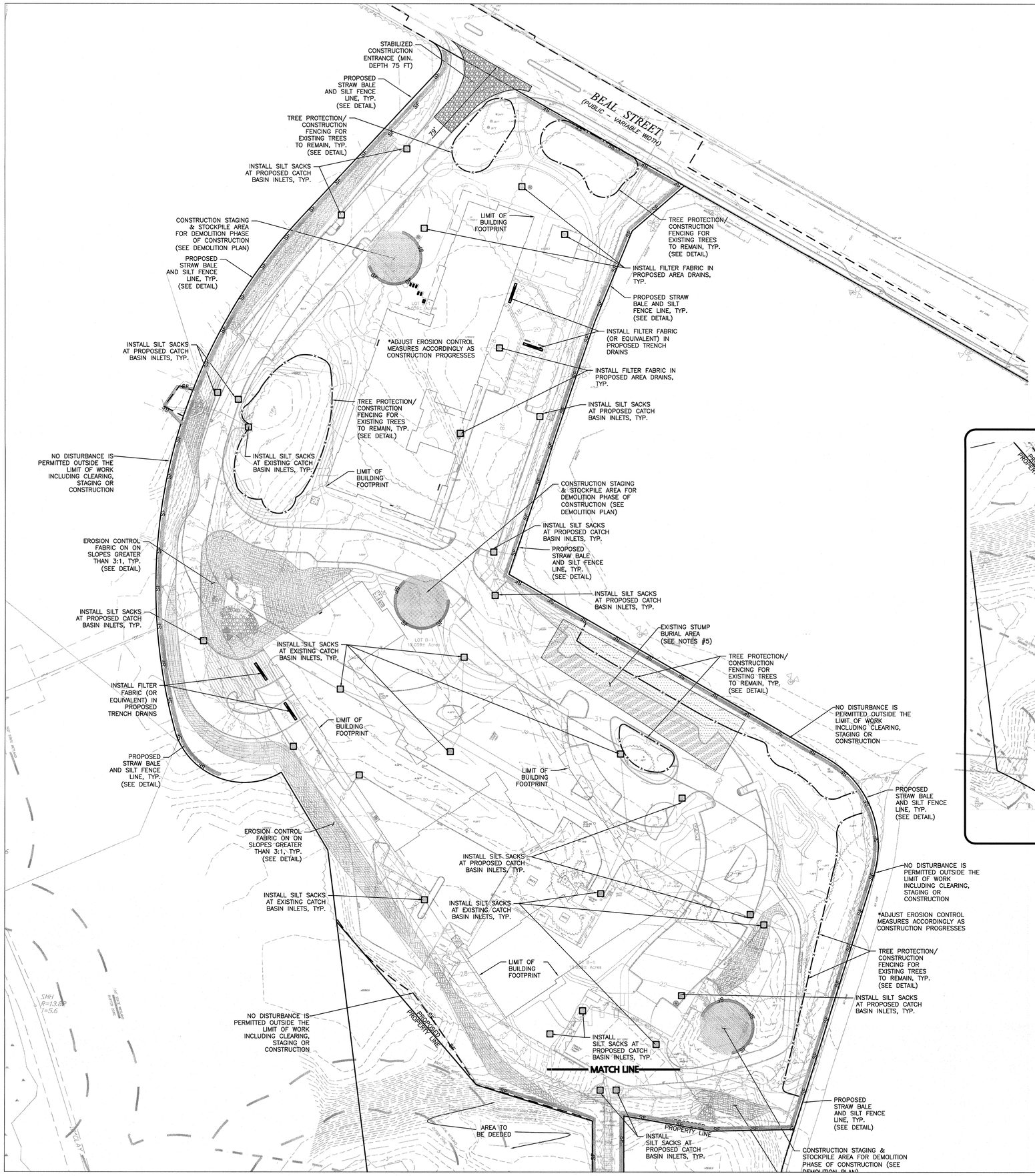

LEGEND:

SILT FENCE	—SF—
STRAWBALE & SILT FENCE LINE	
TREE PROTECTION/FENCING	—x—x—
EROSION CONTROL FABRIC	
SILT SACK	
STABILIZED CONST. ENTRANCE	
STOCKPILE/CONSTRUCTION STAGING AREA	
LIMIT OF WORK LINE	
EXISTING TREES TO REMAIN	
EDGE OF EXISTING TREES TO REMAIN	

NOTES:

1. THE LOCATIONS OF EXISTING UNDERGROUND UTILITIES ARE SHOWN IN AN APPROXIMATE WAY ONLY AND HAVE NOT BEEN INDEPENDENTLY VERIFIED BY THE OWNER OR IT'S REPRESENTATIVE. THE CONTRACTOR SHALL DETERMINE THE EXACT LOCATION OF ALL EXISTING UTILITIES BEFORE COMMENCING WORK, AND AGREES TO BE FULLY RESPONSIBLE FOR ANY AND ALL DAMAGES WHICH MIGHT BE OCCASIONED BY THE CONTRACTOR'S FAILURE TO EXACTLY LOCATE AND PRESERVE ANY AND ALL UNDERGROUND UTILITIES.
2. THE INFORMATION SHOWN ON THIS PLAN IS THE SOLE PROPERTY OF ALLEN & MAJOR ASSOCIATES, INC. IT'S INTENDED USE IS TO PROVIDE INFORMATION. ANY ALTERATION, MISUSE, OR RECALCULATION OF INFORMATION OR DATA WITHOUT THE EXPRESSED, WRITTEN CONSENT OF ALLEN & MAJOR ASSOCIATES, INC. IS STRICTLY PROHIBITED.
3. PIPE DIMENSIONS ARE MEASURED FROM THE INSIDE FACE OF THE STRUCTURE.
4. THE CONTRACTOR SHALL CONTACT "DIGSAFE" AND THE AT LEAST 72 HOURS PRIOR TO ANY EXCAVATION WORK TO REQUEST THE LOCATION OF THE EXISTING UTILITIES. DIGSAFE: 1-888-344-7233.
5. THE CONTRACTOR SHALL REVIEW THE "LANDFILL COVER ASSESSMENT DATA REPORT," DATED OCTOBER 4, 2017 BY HALEY AND ALDRICH. SPECIAL PRECAUTIONS SHALL BE TAKEN TO ENSURE THAT THIS AREA IS NOT DISTURBED DURING CONSTRUCTION.
6. A LIMIT OF CLEARING MUST BE MARKED BY A MULCH LOG OR CONSTRUCTION FENCE.
7. EXISTING CATCH BASINS SHALL BE EQUIPPED WITH SILT SACKS UNTIL THEY ARE PROPERLY ABANDONED AND

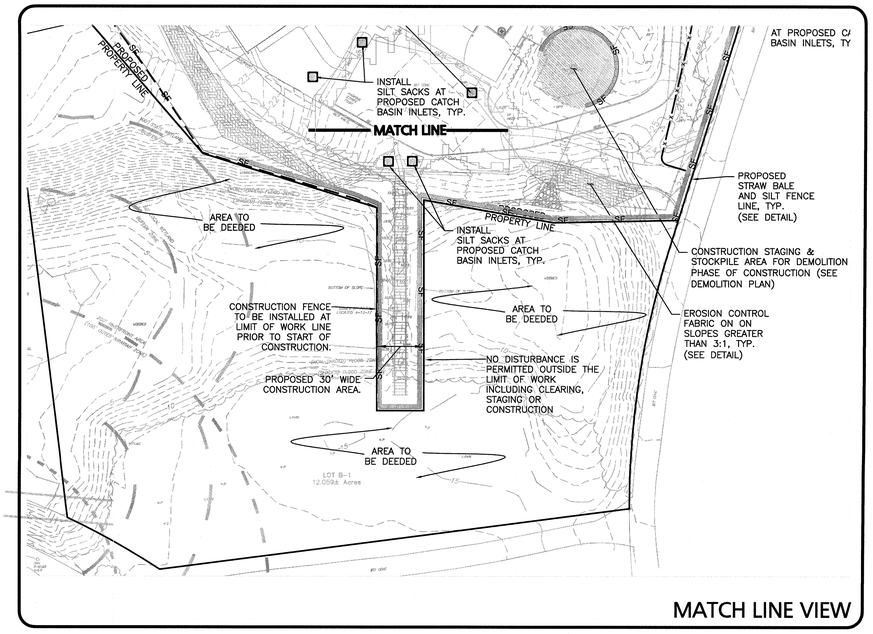

MATCH LINE VIEW

CUBE 3
architecture interiors planning
360 Merrimack Street Lawrence MA 01843
phone: 978.989.9900 www.cube3studio.com

project information:

BROADSTONE BARE COVE HINGHAM
230 BEAL ST.
HINGHAM, MA

client information:

Broadstone Bare Cove Alliance, LLC.

C/O Alliance Residential Company
184 High Street Suite
401 Boston, MA 02110

consultant information:

Prepared by:

ALLEN & MAJOR ASSOCIATES, INC.
civil & structural engineering • land surveying
environmental consulting landscape architecture
www.allenmajor.com
100 Cummings Center
Suite 407B
Beverly, MA 01915
TEL: (781) 592-8897
FAX: (781) 592-2896
WOBURN, MA • LAKEVILLE, MA • MANCHESTER, NH

issuance:

COMPREHENSIVE PERMIT APPLICATION PLANS

NOT FOR CONSTRUCTION

key plan:

drawing information:

drawing by:	SJL
drawing checked by:	CMQ
drawing scale:	1"=40'
drawing date:	12 AUGUST 2017
project number:	2118-02

drawing revisions:

No.	Description	Date
1	Issued for ZBA Resubmittal	10/25/16
2	Issued for ZBA Resubmittal	11/02/16
3	Issued for ZBA Resubmittal	01/04/17
4	Issued for ZBA Resubmittal	01/19/17
5	Issued for ZBA Resubmittal	02/14/17
6	Issued for ZBA Resubmittal	03/29/17
7	Issued for ZBA Resubmittal	04/11/17
8	Modifications to Project Plans	11/02/17

registration:

COMMONWEALTH OF MASSACHUSETTS
TIMOTHY J. WILLIAMS
CIVIL
No. 43119
REGISTERED PROFESSIONAL ENGINEER
11/2/17

PROFESSIONAL ENGINEER FOR ALLEN & MAJOR ASSOCIATES, INC.

GRAPHIC SCALE

40 0 20 40 80 160

(IN FEET)
1 inch = 40 ft.

drawing name:

EROSION CONTROL PLAN

drawing number:

C-6

N:\PROJECTS\2118-02\CIVIL\DRAWINGS\CURRENT\C-2118-02 - EROSION CONTROL.DWG

COPYRIGHT (C) 2017 CUBE 3 STUDIO LLC, ALL RIGHTS RESERVED

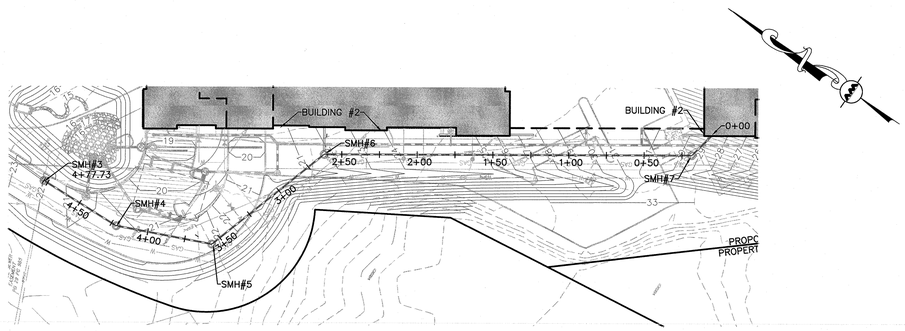

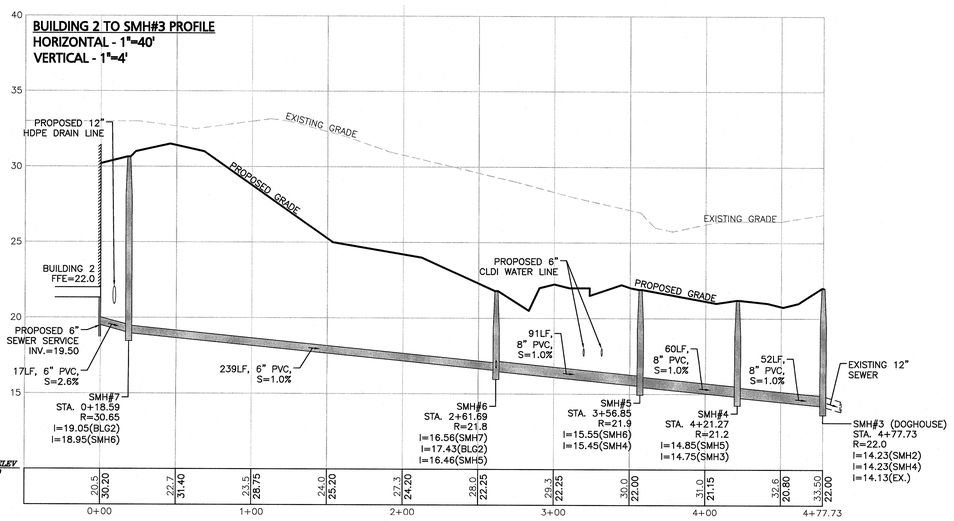

SEWER PROFILE #1

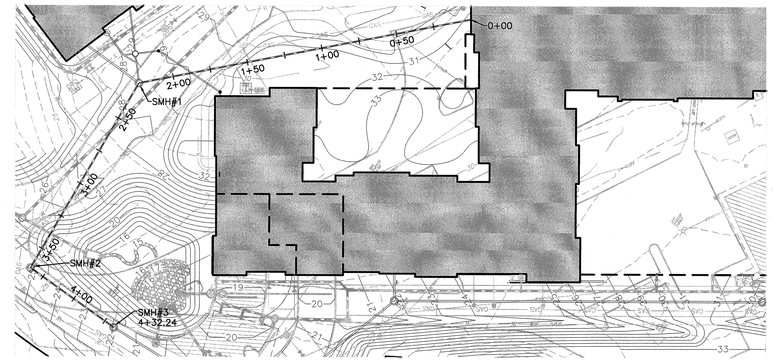

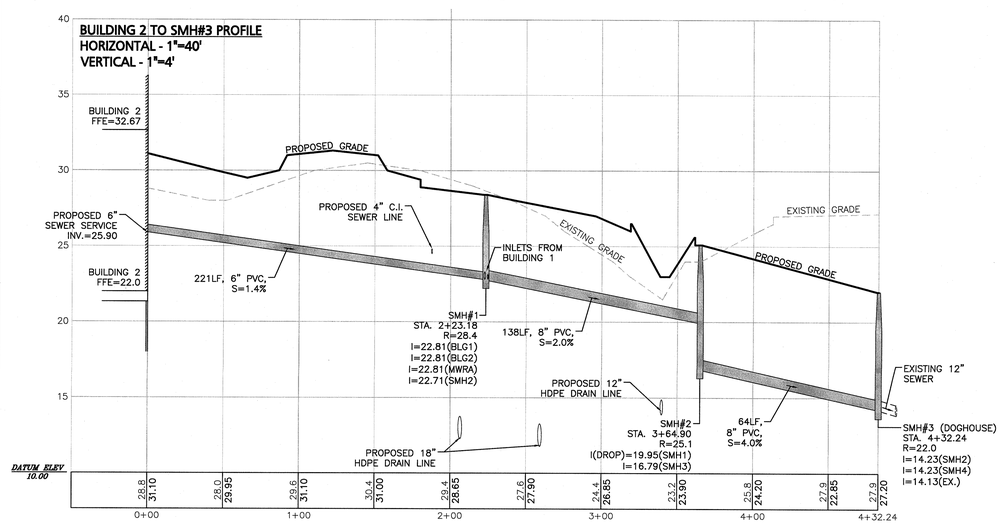

SEWER PROFILE #2

CUBE 3
architecture interiors planning
300 Merrimack Street Lawrence MA 01843
phone: 978.989.0900 www.cube3studio.com

project information:

BROADSTONE
BARE COVE
HINGHAM
230 BEAL ST.
HINGHAM, MA

client information:

Broadstone Bare
Cove Alliance, LLC.

C/O Alliance
Residential Company
184 High Street Suite
401 Boston, MA 02110

consultant information:

PREPARED BY
ALLEN & MAJOR ASSOCIATES, INC.
surveyors • engineers • land planners
environmental consultants • landscape architects
www.allenmajor.com
100 Grossman Drive
Braintree, MA 02184
TEL: (781) 935-6889
FAX: (781) 935-2896
WOBURN, MA • LAKEVILLE, MA • MANCHESTER, NH

issuance:

COMPREHENSIVE
PERMIT
APPLICATION PLANS
NOT FOR
CONSTRUCTION

key plan:

drawing information:

drawing by:	SJL
drawing checked by:	CMQ
drawing scale:	1"=40'
drawing date:	12 AUGUST 2017
project number:	2118-02

drawing revisions:

No.	Description	Date
1	Issued for ZBA Resubmittal	10/25/16
2	Issued for ZBA Resubmittal	11/02/16
3	Issued for ZBA Resubmittal	01/04/17
4	Issued for ZBA Resubmittal	01/19/17
5	Issued for ZBA Resubmittal	02/14/17
6	Issued for ZBA Resubmittal	03/29/17
7	Issued for ZBA Resubmittal	04/11/17
8	Modifications to Project Plans	11/02/17

registration:

11/2/17

COMMONWEALTH OF MASSACHUSETTS
TIMOTHY J. WILLIAMS
CIVIL
No. 43119
REGISTERED PROFESSIONAL ENGINEER

PROFESSIONAL ENGINEER FOR
ALLEN & MAJOR ASSOCIATES, INC.

drawing name:

SEWER
PROFILES

GRAPHIC SCALE

40 0 20 40 80 160

(IN FEET)
1 inch = 40 ft.

drawing number:

P-1

N:\PROJECTS\2118-02\CIVIL\DRAWINGS\CURRENT\C-2118-02 - PROFILES.DWG

COPYRIGHT (C) 2017 CUBE 3 STUDIO LLC, ALL RIGHTS RESERVED

CUBE 3
architecture interiors planning
360 Merrimack Street Lawrence MA 01843
phone: 978.989.0900 www.cube3studio.com

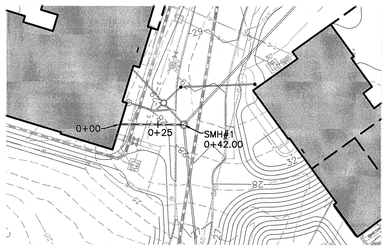

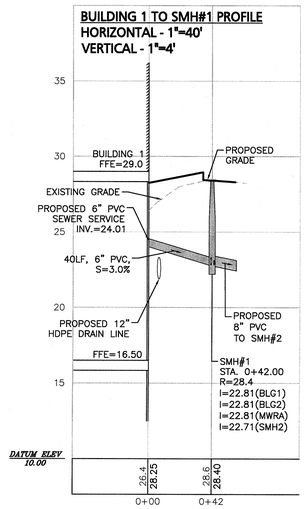

SEWER PROFILE #3

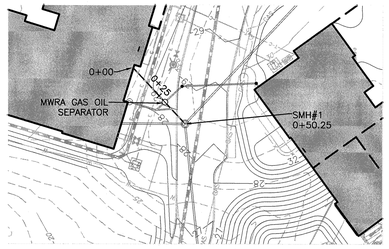

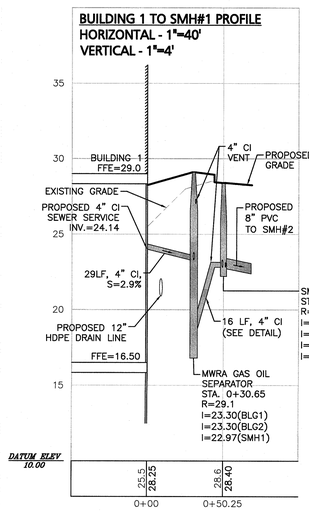

SEWER PROFILE #4

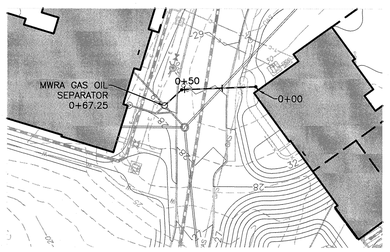

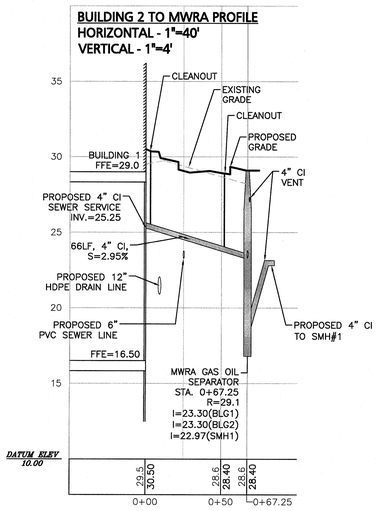

SEWER PROFILE #5

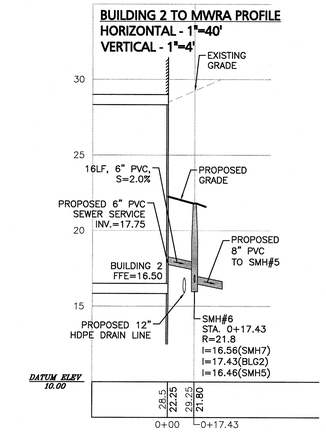

SEWER PROFILE #6

11/2/17

COMMONWEALTH OF MASSACHUSETTS
TIMOTHY J. WILLIAMS
CIVIL
No.43119
REGISTERED PROFESSIONAL ENGINEER

PROFESSIONAL ENGINEER FOR
ALLEN & MAJOR ASSOCIATES, INC.

GRAPHIC SCALE

40 0 20 40 80 160

(IN FEET)
1 inch = 40 ft.

N:\PROJECTS\2118-02\CIVIL\DRAWINGS\CURRENT\C-2118-02 - PROFILES.DWG

project information:
BROADSTONE
BARE COVE
HINGHAM
230 BEAL ST.
HINGHAM, MA

client information:
Broadstone Bare
Cove Alliance, LLC.

C/O Alliance
Residential Company
184 High Street Suite
401 Boston, MA 02110

consultant information:
PREPARED BY
ALLEN & MAJOR ASSOCIATES, INC.
civil & structural engineering • land surveying
environmental consulting• landscape architecture
www.allenmajor.com
100 Grossman Drive
Braintree MA 02184
TEL: (781) 956-0889
FAX: (781) 952-8994
WOBURN, MA • LAKEVILLE, MA • MANCHESTER, NH

issuance:
COMPREHENSIVE
PERMIT
APPLICATION PLANS
NOT FOR
CONSTRUCTION

key plan:

drawing information:

drawing by:	SJL
drawing checked by:	CMQ
drawing scale:	1"=40'
drawing date:	12 AUGUST 2017
project number:	2118-02

drawing revisions:

No.	Description	Date
1	Issued for ZBA Resubmittal	10/25/16
2	Issued for ZBA Resubmittal	11/02/16
3	Issued for ZBA Resubmittal	01/04/17
4	Issued for ZBA Resubmittal	01/19/17
5	Issued for ZBA Resubmittal	02/14/17
6	Issued for ZBA Resubmittal	03/29/17
7	Issued for ZBA Resubmittal	04/11/17
8	Modifications to Project Plans	11/02/17

registration:

drawing name:
SEWER
PROFILES

drawing number:
P-2

COPYRIGHT (C) 2017 CUBE 3 STUDIO LLC, ALL RIGHTS RESERVED

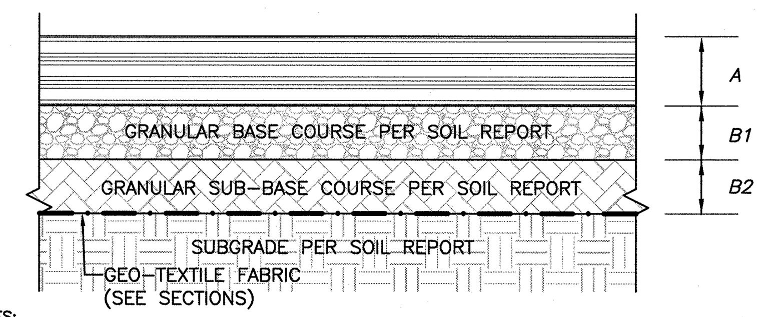

NOTES:
1. SURFACE COURSE, BASE, AND SUB-GRADE ARE SHOWN PER THE GEO-TECHNICAL ENGINEER'S RECOMMENDATIONS FOR LOCAL SOILS OR DRAINAGE CONDITIONS AND/OR METHODS.
2. SUB-GRADE SHALL BE COMPACTED TO 95% OF PROCTOR.
3. COORDINATE PAVEMENT DETAIL WITH GEO-TECH & ENGINEER.

STANDARD DUTY PAVING – AUTO PARKING
A = 1.5" ASPHALT CONCRETE – SURFACE COURSE (M3.11.03, TABLE A, TOP COURSE)
1.5" ASPHALT CONCRETE – BINDER COURSE (M3.11.03, TABLE A, BINDER COURSE)
B1&B2 = 6" GRANULAR BASE/SUB-BASE COARSE – MASS HIGHWAY DEPARTMENT (MHD) M1.03.0 TYPE B GRAVEL BURROW

HEAVY DUTY PAVING – TRUCK TRAFFIC AREAS
A = 2.0" ASPHALT CONCRETE – SURFACE COURSE (M3.11.03, TABLE A, TOP COURSE)
2.0" ASPHALT CONCRETE – BINDER COURSE (M3.11.03, TABLE A, BINDER COURSE)
B1 = 6" GRANULAR BASE COURSE – MHD M2.01.07 DENSE GRADED CRUSHED STONE
B2 = 10" GRANULAR SUB-BASE COURSE – MHD M1.03.0 TYPE B GRAVEL BORROW

LANDFILL AREA – AUTO PARKING
A = 2.0" ASPHALT CONCRETE – SURFACE COURSE (M3.11.03, TABLE A, TOP COURSE)
2.0" ASPHALT CONCRETE – BINDER COURSE (M3.11.03, TABLE A, BINDER COURSE)
B1 = 6" GRANULAR BASE COURSE – MHD M2.01.07 DENSE GRADED CRUSHED STONE
B2 = 10" GRANULAR SUB-BASE COURSE – MHD M1.03.0 TYPE B GRAVEL BORROW OVER A GEO-TEXTILE FILTER FABRIC

BITUMINOUS ROADWAY SECTIONS (1)
NOT TO SCALE

DESC.	SIGN	SIZE	MOUNTING HEIGHT	DESCRIPTION	REFLECTORIZED
R1-1	STOP	30"x30"	7' – 0"	WHITE ON RED	YES
R7-8		12"x20"	7' – 0"	GREEN & BLUE ON WHITE	NO
R7-8 (MODIFIED)		12"x20"	7' – 0"	GREEN & BLUE ON WHITE	NO
R8-1 (MODIFIED)	NO PARKING FIRE LANE	12"x18"	7' – 0"	RED ON WHITE	NO
R3-2		24"x24"	7' – 0"	BLACK & RED ON WHITE	YES
W15-1		30"x30"	7' – 0"	BLACK ON FLUORESCENT YELLOW /GREEN	YES
W11-2		30"x30"	7' – 0"	BLACK ON FLUORESCENT YELLOW	YES
W16-9p	AHEAD	18"x30"	7' – 0"	BLACK ON FLUORESCENT YELLOW	YES
R4-7		24"x30"	7' – 0"	BLACK ON WHITE	YES
R6-1R	ONE WAY	12"x36"	7' – 0"	BLACK ON WHITE	YES
R3-4		24"x24"	7' – 0"	BLACK ON WHITE	YES
16-7p(L)		18"x30"	7' – 0"	BLACK ON FLUORESCENT YELLOW	YES

1. TRAFFIC AND SAFETY SIGNAGE SHALL COMPLY WITH MUTCD STANDARDS.
2. LIMITED TIME PARKING SIGN SHALL BE PRODUCT #W4986 BY SAFETYSIGN.COM, BRIMAR INDUSTRIES, INC. (800) 274-6271 OR APPROVED EQUAL.

SIGN TABLE (6)
NOT TO SCALE

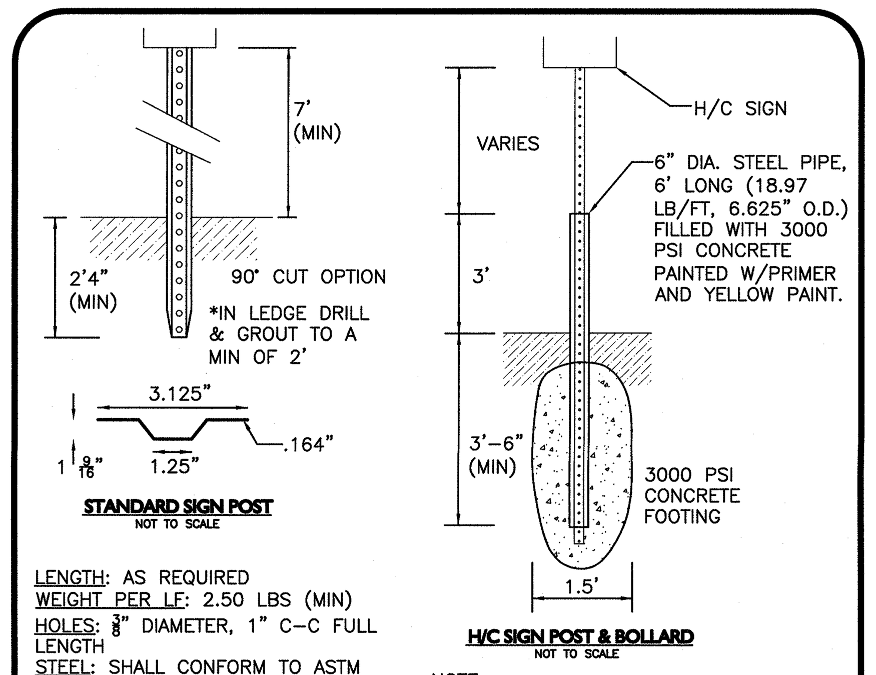

LENGTH: AS REQUIRED
WEIGHT PER LF: 2.50 LBS (MIN)
HOLES: 3/8" DIAMETER, 1" C-C FULL LENGTH
STEEL: SHALL CONFORM TO ASTM A-499 OR ASTM A-576
FINISH: SHALL BE PAINTED WITH 2 COATS OF AN APPROVED MEDIUM GREEN, BAKED ON OR AIR DRIED, PAINT OF WEATHER RESISTANT QUALITY.

NOTE:
1. STEEL PIPE BOLLARD & CONCRETE FOOTING TO BE USED ON POST MOUNTED SIGNS IN PAVED AREAS.

SIGN POST DETAIL (2)
NOT TO SCALE

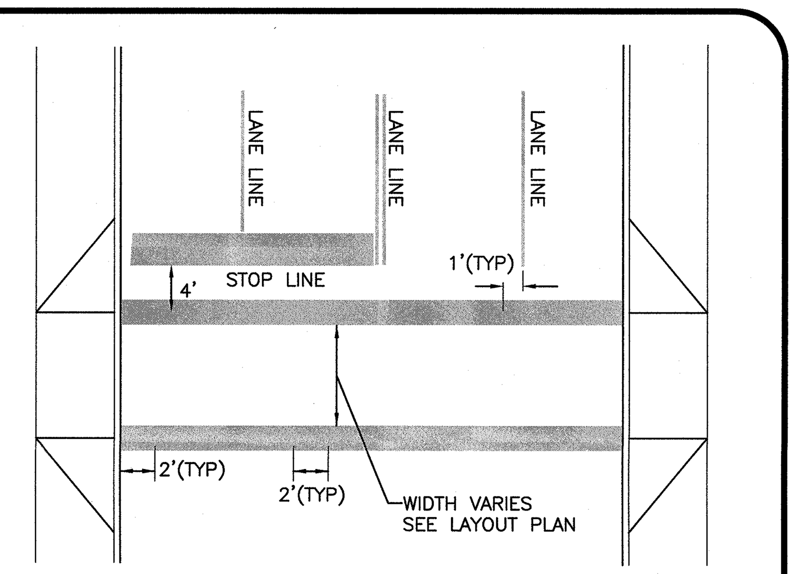

NOTE:
① LANE LINE STRIP: THIS IS LOCATED IN THE LINE WITH EACH LANE LINE AND HALF THE STRIP ON EACH SIDE.
② MID LINE STRIP: THIS IS LOCATED MIDWAY BETWEEN EACH LANE LINE STRIP.

CROSSWAK STRIPING (3)
NOT TO SCALE

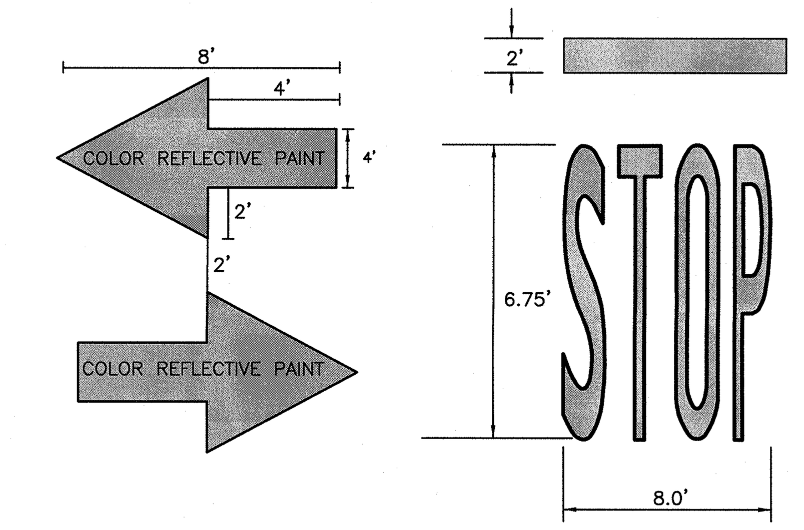

WHITE THERMOPLASTIC LETTERING/ARROWS (4)
NOT TO SCALE

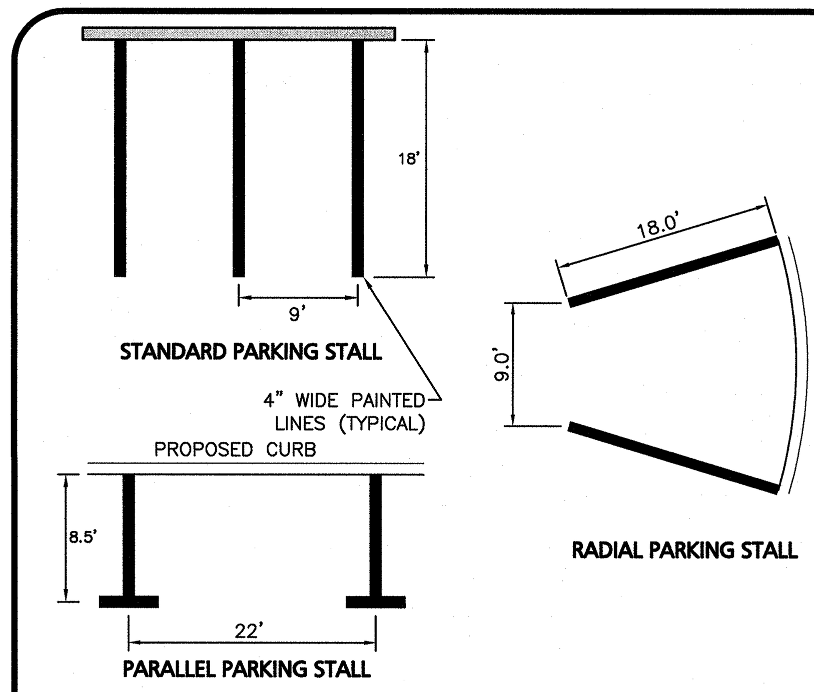

STANDARD PARKING STRIPING (5)
NOT TO SCALE

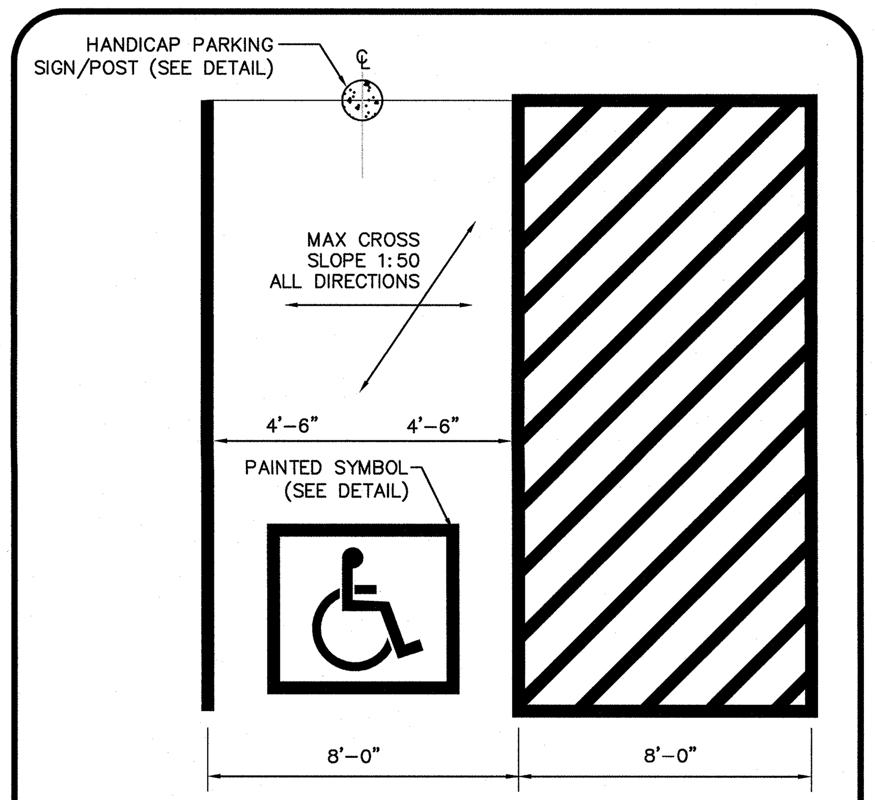

TYPICAL ACCESSIBLE HANDICAP PARKING STALL (7)
NOT TO SCALE

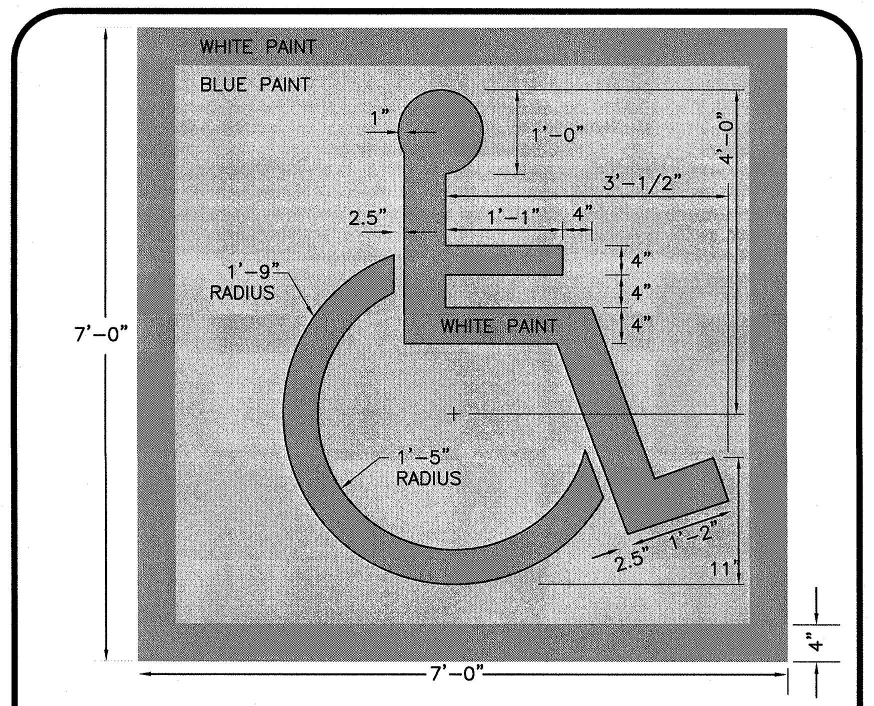

SYMBOL TO BE CENTERED ON WIDTH OF PARKING STALL. SYMBOL IS REQUIRED TO CONTRAST WITH BACKGROUND. USE WHITE ON BLUE (COLOR #105090 IN FEDERAL STANDARD 5952) DOUBLE COAT.

ACCESSIBLE PARKING STALL PAVEMENT MARKING (8)
NOT TO SCALE

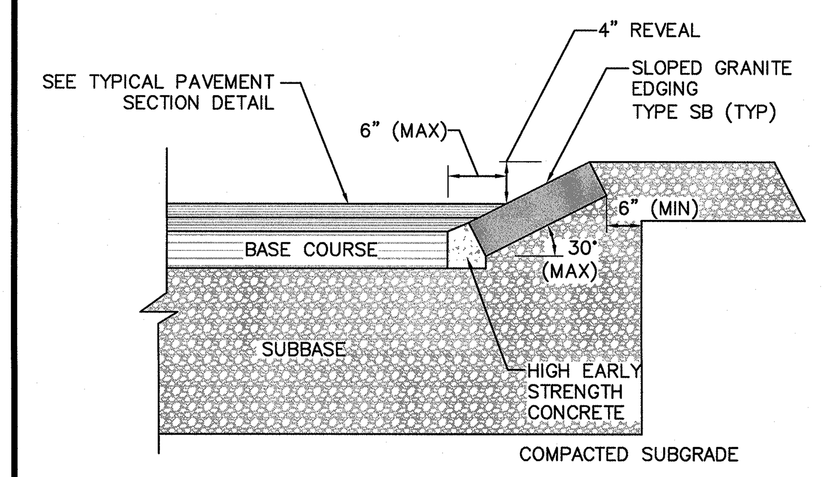

NOTE:
1. SLOPED GRANITE CURB TO BE USED IN ALL LOCATIONS OTHER THAN THOSE ADJACENT TO SIDEWALK OR HARDSCAPE.

SLOPED GRANITE CURB (9)
NOT TO SCALE

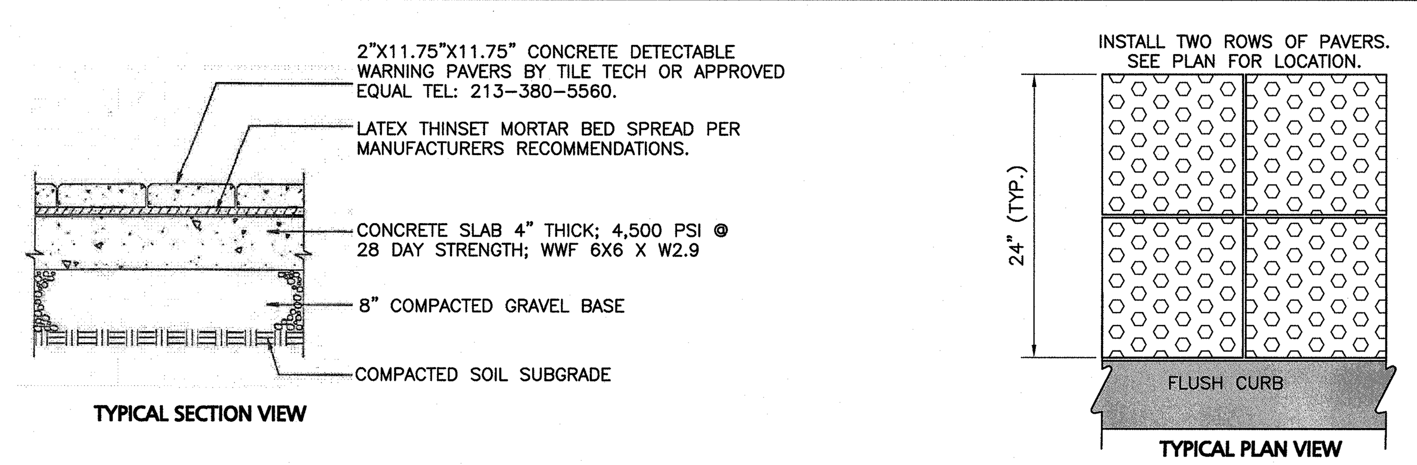

NOTES:
1. CONCRETE SLAB SHALL BE SLOPED 1.5% CROSS PITCH MAX TO PROVIDE COMPLETE SURFACE DRAINAGE. SEE GRADING PLAN & HANDICAP CURB CUT / CURB TRANSISTION DETAIL.
2. SLAB TO HAVE STEEL TROWEL AND FINE BROOM FINISH. DO NOT USE CURING COMPOUNDS. CONTRACTOR TO ADD EXPANSION JOINTS AND PREMOLDED FILLER AT EDGE OF TILES AND ADJACENT MATERIAL.
3. SET TILES FLUSH WITH ADJACENT MATERIALS.
4. SUBMIT SHOP DRAWINGS OF TILES AND SAMPLE FOR APPROVAL OF COLOR TO OWNER / ARCH.
5. INSTALL DETECTABLE WARNING PAVERS PER MANUFACTURER'S RECOMMENDATIONS.

DETECTABLE WARNING PAVERS (10)
NOT TO SCALE

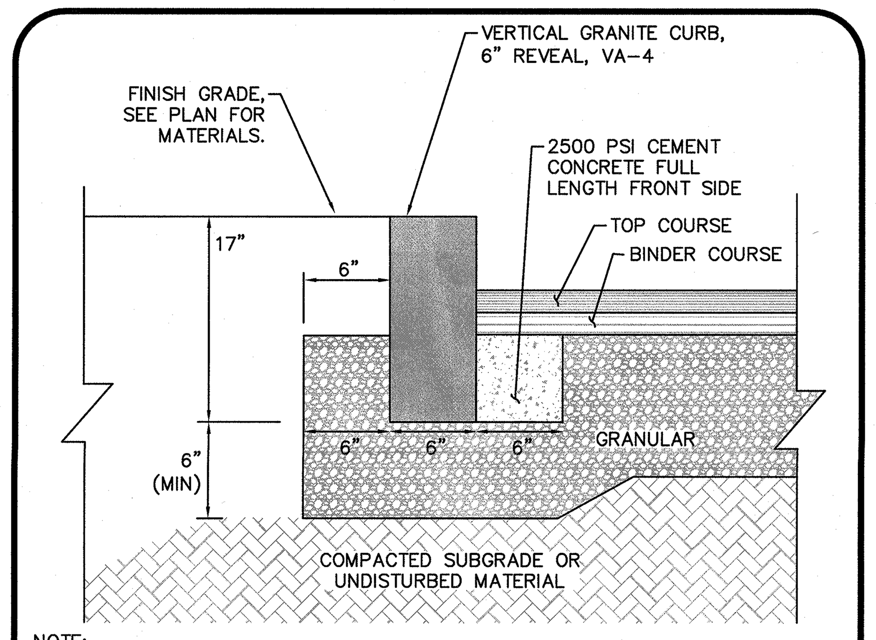

NOTE:
1. CUT NEAT LINE 6" FROM CURB LINE AND REMOVE BASE AND GRAVEL. REPLACE WITH CEMENT CONCRETE.
2. HOT MIX ASPHALT SHALL NOT BE USED AS A SUBSTITUTE FOR CEMENT CONCRETE.

VERTICAL GRANITE CURB (11)
NOT TO SCALE

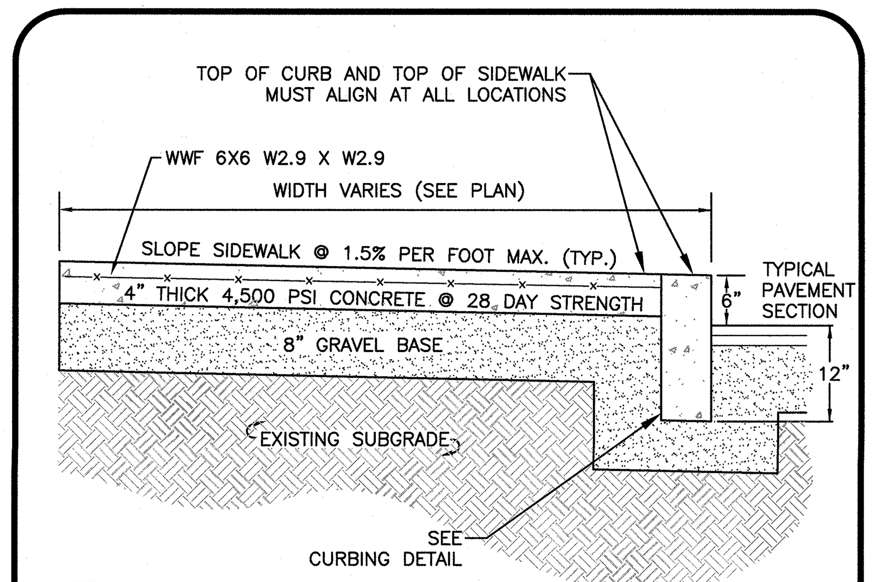

NOTES:
1. SIDEWALK TO HAVE TOOLED JOINTS IN A 5' x 5' (TYP.) GRID WITH EXPANSION JOINTS 15' ON CENTER AND PREMOLDED FILLER.
2. TOOLED JOINT 6" FROM FACE OF CURB
3. SEE PLAN FOR ELEVATIONS AT CURB
4. SIDEWALK CROSS SLOPE TO BE 1.5% MAX & SIDEWALK LONGITUDINAL RUNNING SLOPE TO BE 4.5% MAX, TYP.

CONCRETE SIDEWALK DETAIL (12)
NOT TO SCALE

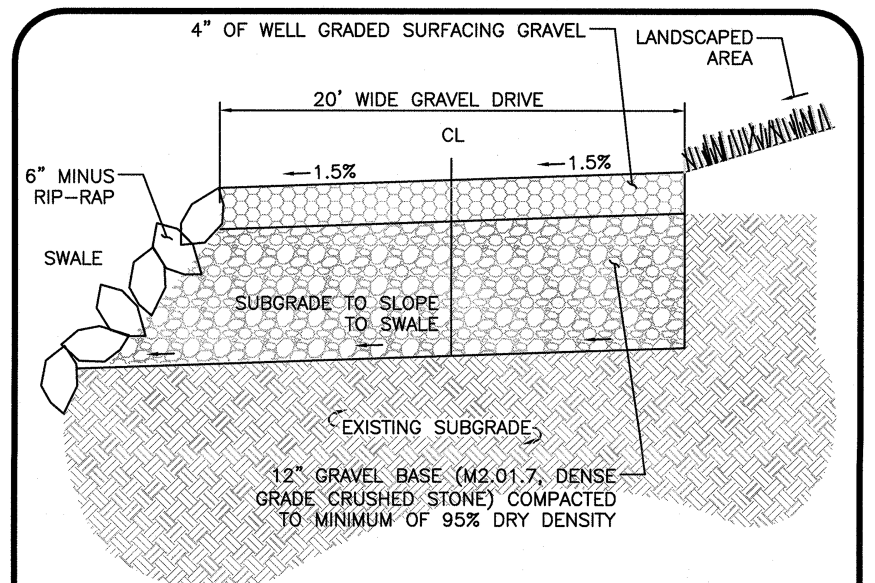

THE SURFACING GRAVEL SHALL MEETS THE FOLLOWING GRADATION (OR APPROVED EQUAL):

SIEVE SIZE	PERCENT PASSING
3/4-INCH	100
U.S. NO. 4	50-78
U.S. NO. 8	37-67
U.S. NO. 40	113-35
U.S. NO. 200	8-15
PLASTICITY INDEX	4-12

STABILIZED AGGREGATE (13)
NOT TO SCALE

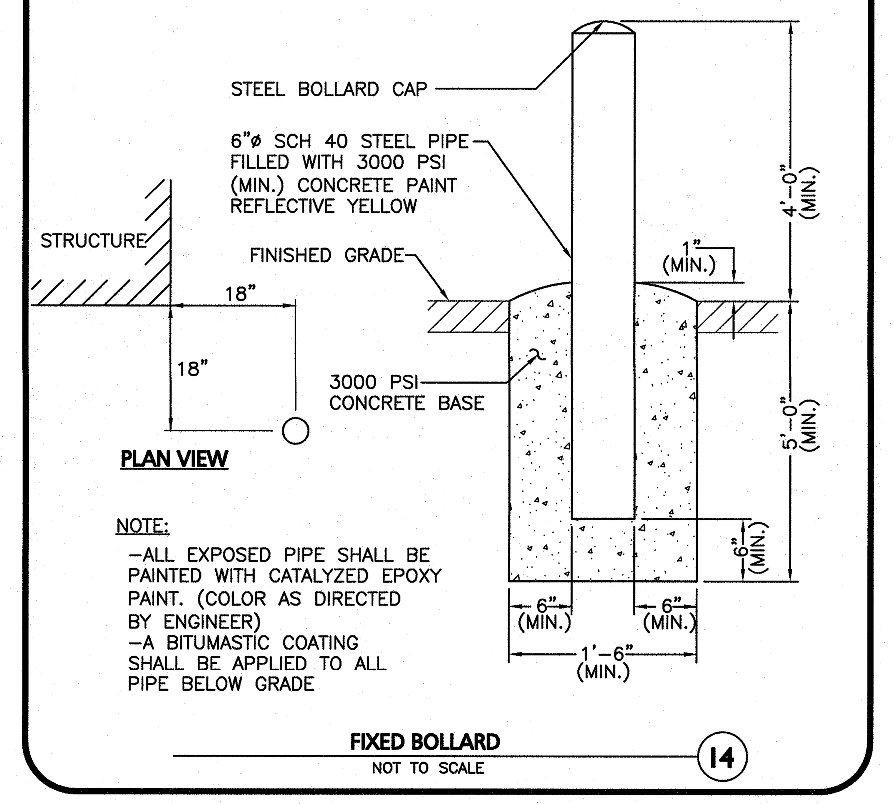

NOTE:
–ALL EXPOSED PIPE SHALL BE PAINTED WITH CATALYZED EPOXY PAINT. (COLOR AS DIRECTED BY ENGINEER)
–A BITUMASTIC COATING SHALL BE APPLIED TO ALL PIPE BELOW GRADE

FIXED BOLLARD (14)
NOT TO SCALE

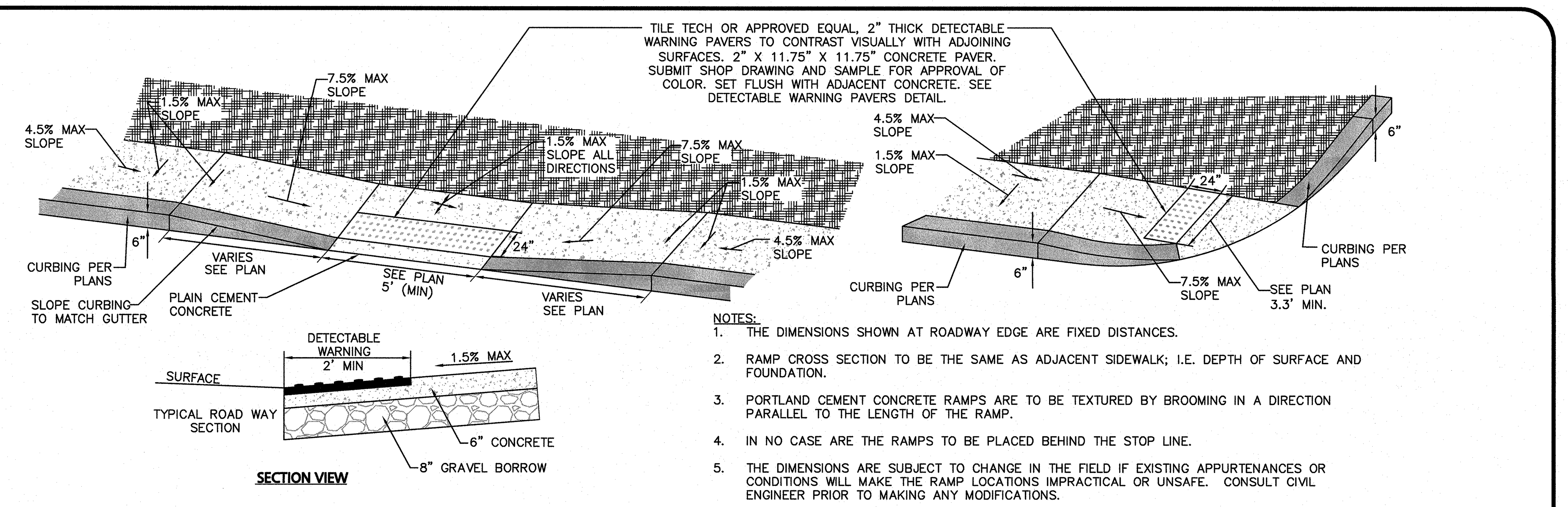

NOTES:
1. THE DIMENSIONS SHOWN AT ROADWAY EDGE ARE FIXED DISTANCES.
2. RAMP CROSS SECTION TO BE THE SAME AS ADJACENT SIDEWALK; I.E. DEPTH OF SURFACE AND FOUNDATION.
3. PORTLAND CEMENT CONCRETE RAMPS ARE TO BE TEXTURED BY BROOMING IN A DIRECTION PARALLEL TO THE LENGTH OF THE RAMP.
4. IN NO CASE ARE THE RAMPS TO BE PLACED BEHIND THE STOP LINE.
5. THE DIMENSIONS ARE SUBJECT TO CHANGE IN THE FIELD IF EXISTING APPURTENANCES OR CONDITIONS WILL MAKE THE RAMP LOCATIONS IMPRACTICAL OR UNSAFE. CONSULT CIVIL ENGINEER PRIOR TO MAKING ANY MODIFICATIONS.

HANDICAP CURB CUT & CURB TRANSITION (15)
NOT TO SCALE

11/2/17
COMMONWEALTH OF MASSACHUSETTS
TIMOTHY J. WILLIAMS
CIVIL
No.43119
REGISTERED PROFESSIONAL ENGINEER

PROFESSIONAL ENGINEER FOR
ALLEN & MAJOR ASSOCIATES, INC.

CUBE 3
architecture interiors planning
360 Merrimack Street Lawrence MA 01843
phone: 978.989.9900 www.cube3studio.com

project information:
BROADSTONE BARE COVE HINGHAM
230 BEAL ST.
HINGHAM, MA

client information:
Broadstone Bare Cove Alliance, LLC.

C/O Alliance Residential Company
184 High Street Suite 401 Boston, MA 02110

consultant information:
PREPARED BY:
ALLEN & MAJOR ASSOCIATES, INC.
civil & structural engineering ◆ land surveying
environmental consulting ◆ landscape architecture
www.allenmajor.com
100 COMMERCE WAY
WOBURN MA 01801
TEL: (781) 935-6889
FAX: (781) 935-2896
WOBURN, MA ◆ LAKEVILLE, MA ◆ MANCHESTER, NH

issuance:
COMPREHENSIVE PERMIT APPLICATION PLANS
NOT FOR CONSTRUCTION

key plan:

drawing information:

drawing by:	SJL
drawing checked by:	CMQ
drawing scale:	1"=40'
drawing date:	12 AUGUST 2017
project number:	2118-02

drawing revisions:

No.	Description	Date
1	Issued for ZBA Resubmittal	10/25/16
2	Issued for ZBA Resubmittal	11/02/16
3	Issued for ZBA Resubmittal	01/04/17
4	Issued for ZBA Resubmittal	01/19/17
5	Issued for ZBA Resubmittal	02/14/17
6	Issued for ZBA Resubmittal	03/29/17
7	Issued for ZBA Resubmittal	04/11/17
8	Modifications to Project Plans	11/02/17

registration:

drawing name:
DETAILS

drawing number:
D-1

N:\PROJECTS\2118-02\CIVIL\DRAWINGS\CURRENT\C-2118-02 – DETAILS.DWG

COPYRIGHT (C) 2017 CUBE 3 STUDIO LLC, ALL RIGHTS RESERVED

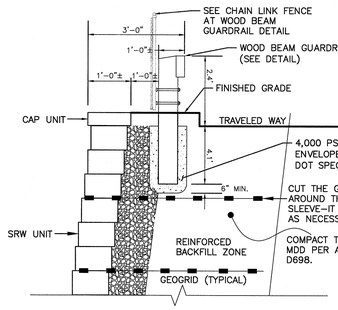

GUARDRAIL AT TOP OF SEGMENTAL BLOCK RETAINING WALL (1)
NOT TO SCALE

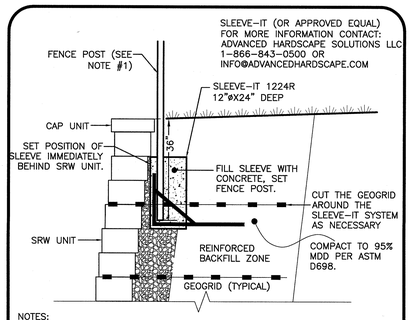

NOTES:
1. FENCING SYSTEMS APPROVED FOR USE WITH SLEEVE-IT 1224R ARE LIMITED TO THE FOLLOWING HEIGHTS:
   A. CHAIN LINK – UP TO 8–FT,
   B. PRIVACY – UP TO 6–FT (WOODEN, PVC, METAL).
   C. POST SIZE 4"X4" MAX.

FENCE POST AT TOP OF SEGMENTAL BLOCK RETAINING WALL (2)
NOT TO SCALE

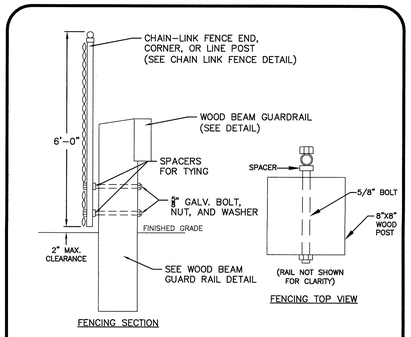

FENCE POST ATTACHED TO WOOD BEAM GUARDRAIL (3)
NOT TO SCALE

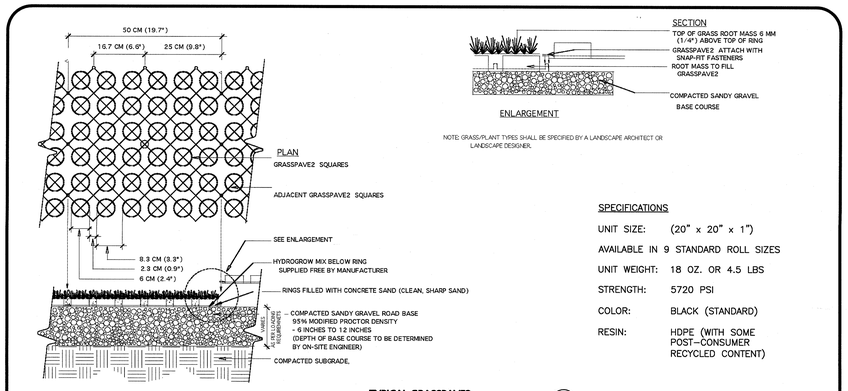

NOTE: GRASS/PLANT TYPES SHALL BE SPECIFIED BY A LANDSCAPE ARCHITECT OR LANDSCAPE DESIGNER.

SPECIFICATIONS

UNIT SIZE:	(20" x 20" x 1")
AVAILABLE IN 9 STANDARD ROLL SIZES	
UNIT WEIGHT:	18 OZ. OR 4.5 LBS
STRENGTH:	5720 PSI
COLOR:	BLACK (STANDARD)
RESIN:	HDPE (WITH SOME POST-CONSUMER RECYCLED CONTENT)

TYPICAL GRASSPAVE2 (4)
NOT TO SCALE

NOTE:
TACK COAT – PROVIDE EMULSIFIED ASPHALT WHICH CONFORMS TO THE REQUIREMENTS OF THE STATE SPECIFICATIONS, DILUTED WITH ONE PART WATER TO ONE ONE PART ASPHALT FOLLOWING AASHTO M140/ASTM D997, OR AASHTO M208/ASTM D2397, SS-1H, CSS-1, OR CSS-1H.

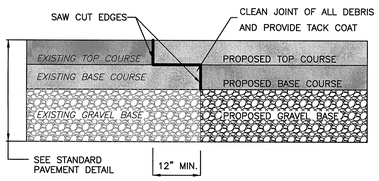

PAVEMENT KEY CUT DETAIL (5)
NOT TO SCALE

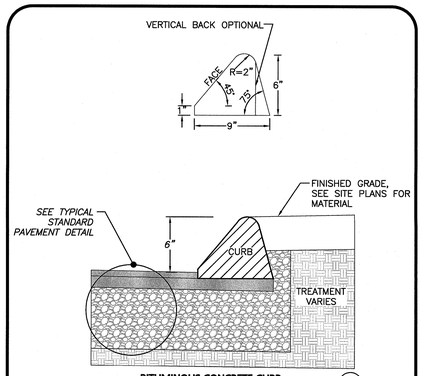

BITUMINOUS CONCRETE CURB (6)
NOT TO SCALE

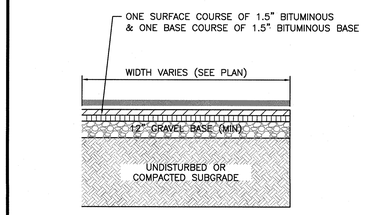

NOTES
1. SEE PLAN FOR ELEVATIONS.

BITUMUNOUS SIDEWALK/WALKWAY (7)
NOT TO SCALE

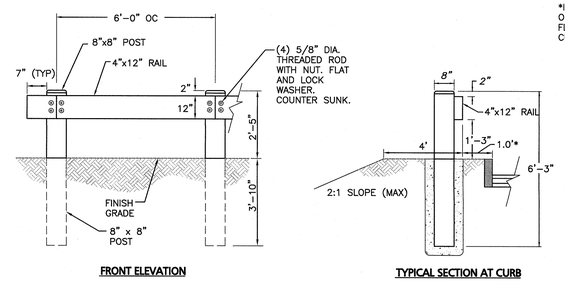

*IN SOME LOCATIONS THE FACE OF GUARDRAIL IS WILL BE FLUSH WITH THE FACE OF THE CURB – SEE PLAN

FRONT ELEVATION

TYPICAL SECTION AT CURB

NOTES:
1. ALL TIMBER STOCK TO BE PRESSURE TREATED.
2. ALL HARDWARE TO BE GALVANIZED STEEL.

WOOD BEAM GUARD RAIL (8)
NOT TO SCALE

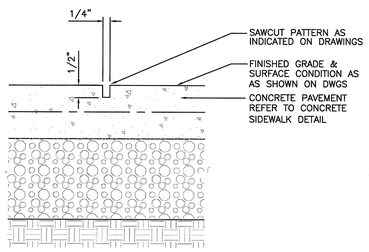

TYPICAL CONCRETE SAWCUT JOINT CONTROL (9)
NOT TO SCALE

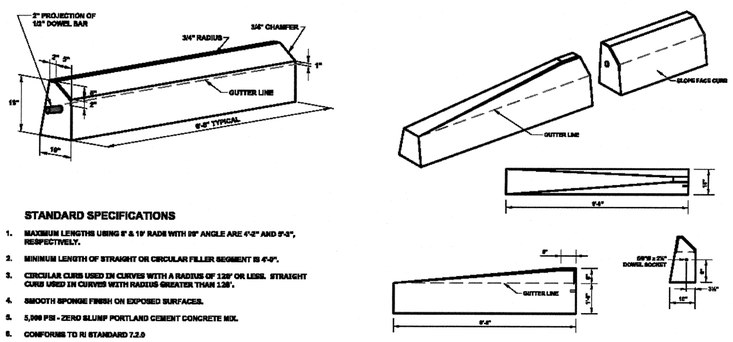

STANDARD SPECIFICATIONS
1. MAXIMUM LENGTHS USING 8' & 16' RADII WITH 90° ANGLE ARE 4'-2" AND 5'-3", RESPECTIVELY.
2. MINIMUM LENGTH OF STRAIGHT OR CIRCULAR FILLER SEGMENT IS 4'-0".
3. CIRCULAR CURB USED IN CURVES WITH A RADIUS OF 128' OR LESS. STRAIGHT CURB USED IN CURVES WITH RADIUS GREATER THAN 128'.
4. SMOOTH SPONGE FINISH ON EXPOSED SURFACES.
5. 5,000 PSI - ZERO SLUMP PORTLAND CEMENT CONCRETE MIX.
6. CONFORMS TO RI STANDARD 7.2.5

DURASTONE PRECAST SLOPED CONCRETE CURB (10)
NOT TO SCALE

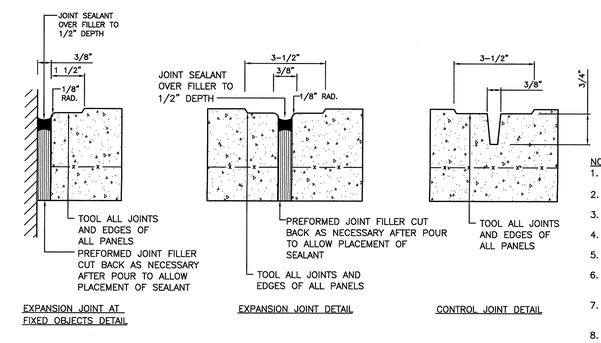

NOTES:
1. PROVIDE EXPANSION JOINTS AT MIN. 15' O.C. MIN.
2. PROVIDE CONTROL JOINTS AT 5' O.C. UNLESS SHOWN OTHERWISE.
3. PROVIDE BROOM FINISH IN DIRECTION PERPENDICULAR TO DIRECTION OF TRAVEL.
4. CEMENT CONCRETE SHALL BE 4,500 PSI AIR ENTRAINED.
5. REFER TO LANDSCAPING PLANS FOR ADDITIONAL JOINTS.
6. JOINT FILLERS SHALL BE RESILIENT PREMOLDED BITUMINOUS IMPREGNATED FIBERBOARD. SUBMIT SHOP DRAWINGS.
7. JOINT SEALANTS SHALL BE NON– PRIMING POURABLE SELF–LEVELING TYPE. SUBMIT SHOP DRAWINGS.
8. ALL CURBS TO HAVE MAXIMUM 100 FEET WITH DOWELS AND CONTROL JOINTS AT MAXIMUM 15 FEET

CONCRETE SIDEWALK JOINTS (11)
NOT TO SCALE

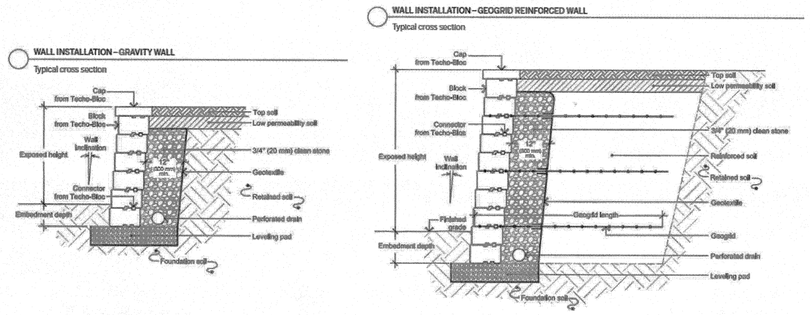

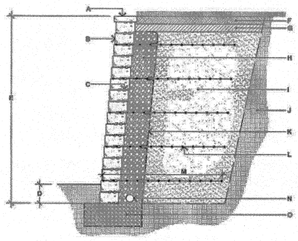

A. CAP UNIT FROM TECHO-BLOC
B. TECHO-BLOC WALL UNIT
C. CONNECTOR
D. EMBEDMENT DEPTH LARGEST: 6" (150 mm) OR 10% OF THE HEIGHT ABOVE GROUND MIN.
E. TOTAL HEIGHT (VARIABLE)
F. TOPSOIL
G. LOW PERMEABILITY SOIL
H. CLEAN STONE ¾" (20 mm) PLACED 12" (300 mm) MIN. WIDE BEHIND WALL
I. REINFORCED SOIL COMPACTED
J. RETAINED SOIL
K. GEOTEXTILE
L. GEOGRID
M. GEOGRID LENGTH
N. PERFORATED DRAIN 4" (100 mm) Dia.
O. LEVELING PAD CRUSHED STONE 0-¾" (0-20 mm) COMPACTED

WALL INSTALLATION - GEOGRID REINFORCED WALL
Typical cross section

The information contained in the design charts is supplied for information purposes only and as such should only be used for preliminary designs. A qualified engineer should be consulted for the final design to be used for construction. TECHO-BLOC and its predecessors, successors, beneficiaries, employees, associates, administrators and insurers can not under any circumstances be held liable for the incorrect use of information contained in the design charts.

The design charts show the number, position and length of the geogrids for a Techo-Bloc inclined wall based on the height of the wall, soil type and the load conditions. Furthermore, geogrid may be required for walls with a height lower than the minimum stated. The geogrid layout has been optimized to satisfy the minimum design requirements of the "Design Manual for Segmental Retaining Walls, 3rd Edition" from the National Concrete Masonry Association.

The height (H) of the wall is the total height from the leveling pad to the top of the wall, including the coping stones of 75 mm (2.95 in) thick. The wall height varies approximately from 1.97 ft (0.6 m) to 8.20 ft (2.5 m), gradually increasing in height increments of 1.31-2.62 ft (0.4-0.8 m).

THE THREE TYPES OF SOIL ASSUMED IN THE REINFORCED SOIL ZONE ARE :

(i) Mixes of sand and gravel (minimum friction angle of 34°);
(ii) Sands (minimum friction angle of 30°) and;
(iii) Low plasticity silts and clays (minimum friction angle of 26°).

The description of the soil is provided for information purposes; it is the actual shear strength parameter that will govern the design.
THE THREE LOAD CONDITIONS ASSUMED ARE:

(i) A horizontal surface above the wall with no surcharge;
(ii) A horizontal surface above the wall with a uniform surcharge of 250 psf (12 kPa) or 100 psf (4.8 kPa) and;
(iii) A 1V:2H slope above the wall.

The –⬚⬚⬚ symbol shows the position and length of the geogrid taken from the front of the block. The foundation soil must be able to support the wall-reinforced backfill system. A geotechnical study to ascertain the bearing capacity of the soil must be carried out. The leveling pad is made of 0-¾ in (0-20 mm) crushed stone. A concrete pad can be used. Compaction must be carried out in successive layers of a maximum of 8" (200 mm) in thickness and in accordance with project specifications.

The minimum burial depth must be 6 in (150 mm) or 10% of the above ground wall height, whichever is greater.

TECHO BLOCK RETAINING WALL (12)
NOT TO SCALE

11/2/17
COMMONWEALTH OF MASSACHUSETTS
TIMOTHY J. WILLIAMS
CIVIL
No. 43119
REGISTERED PROFESSIONAL ENGINEER

PROFESSIONAL ENGINEER FOR
ALLEN & MAJOR ASSOCIATES, INC.

CUBE 3
architecture interiors planning
360 Merrimack Street Lawrence MA 01843
phone: 978.989.0900 www.cube3studio.com

project information:
BROADSTONE BARE COVE
HINGHAM
230 BEAL ST.
HINGHAM, MA

client information:
Broadstone Bare Cove Alliance, LLC.

C/O Alliance Residential Company
184 High Street Suite
401 Boston, MA 02110

consultant information:
Prepared by:

ALLEN & MAJOR ASSOCIATES, INC.
civil & structural engineering • land surveying
environmental consulting landscape architecture
www.allenmajor.com
100 Grossman Drive
Braintree, MA 02184
TEL: (781) 843-4800
FAX: (781) 843-3896
WOBURN, MA • LAKEVILLE, MA • MANCHESTER, NH

issuance:
COMPREHENSIVE PERMIT APPLICATION PLANS
NOT FOR CONSTRUCTION

key plan:

drawing information:

drawing by:	SJL
drawing checked by:	CMQ
drawing scale:	1"=40'
drawing date:	12 AUGUST 2017
project number:	2118-02

drawing revisions:

No.	Description	Date
1	Issued for ZBA Resubmittal	10/25/16
2	Issued for ZBA Resubmittal	11/02/16
3	Issued for ZBA Resubmittal	01/04/17
4	Issued for ZBA Resubmittal	01/19/17
5	Issued for ZBA Resubmittal	02/14/17
6	Issued for ZBA Resubmittal	03/29/17
7	Issued for ZBA Resubmittal	04/11/17
8	Modifications to Project Plans	11/02/17

registration:

drawing name:
DETAILS

drawing number:
D-2

N:\PROJECTS\2118-02\CIVIL\DRAWINGS\CURRENT\C-2118-02 – DETAILS.DWG

COPYRIGHT (C) 2017 CUBE 3 STUDIO LLC, ALL RIGHTS RESERVED

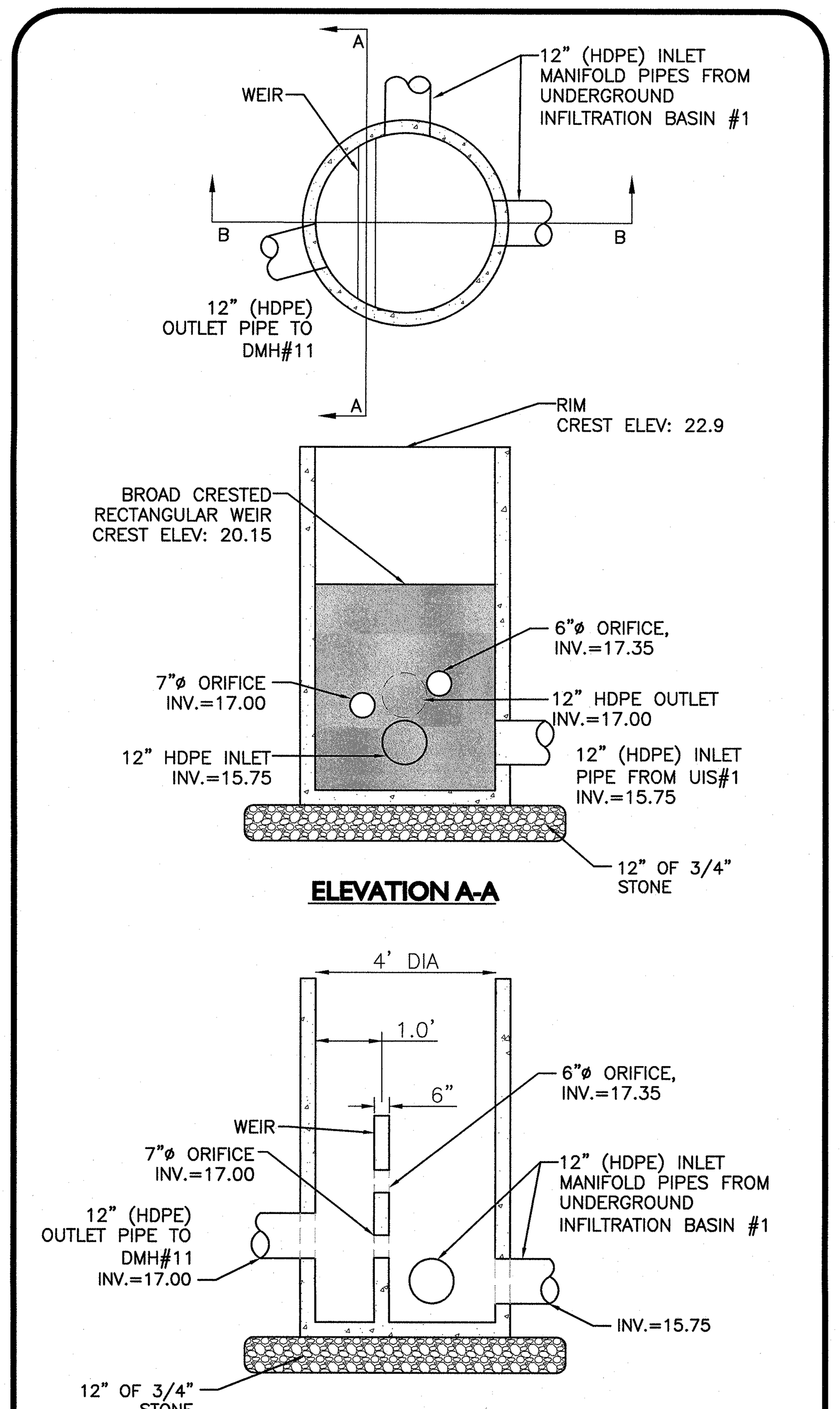

NOTES:

1. CONCRETE: 4,000 PSI MINIMUM AFTER 28 DAYS.
2. ALL REINFORCEMENT PER ASTM C1227-93.
3. TONGUE & GROOVE JOINT SEALED WITH BUTYLE RESIN OR MASTIC.
4. WALLS ARE TO BE 6" THICK & BOTTOM TO BE 8" THICK.
5. PROVIDE 4' SUMP

OUTLET CONTROL STRUCTURE #1 (1)
NOT TO SCALE

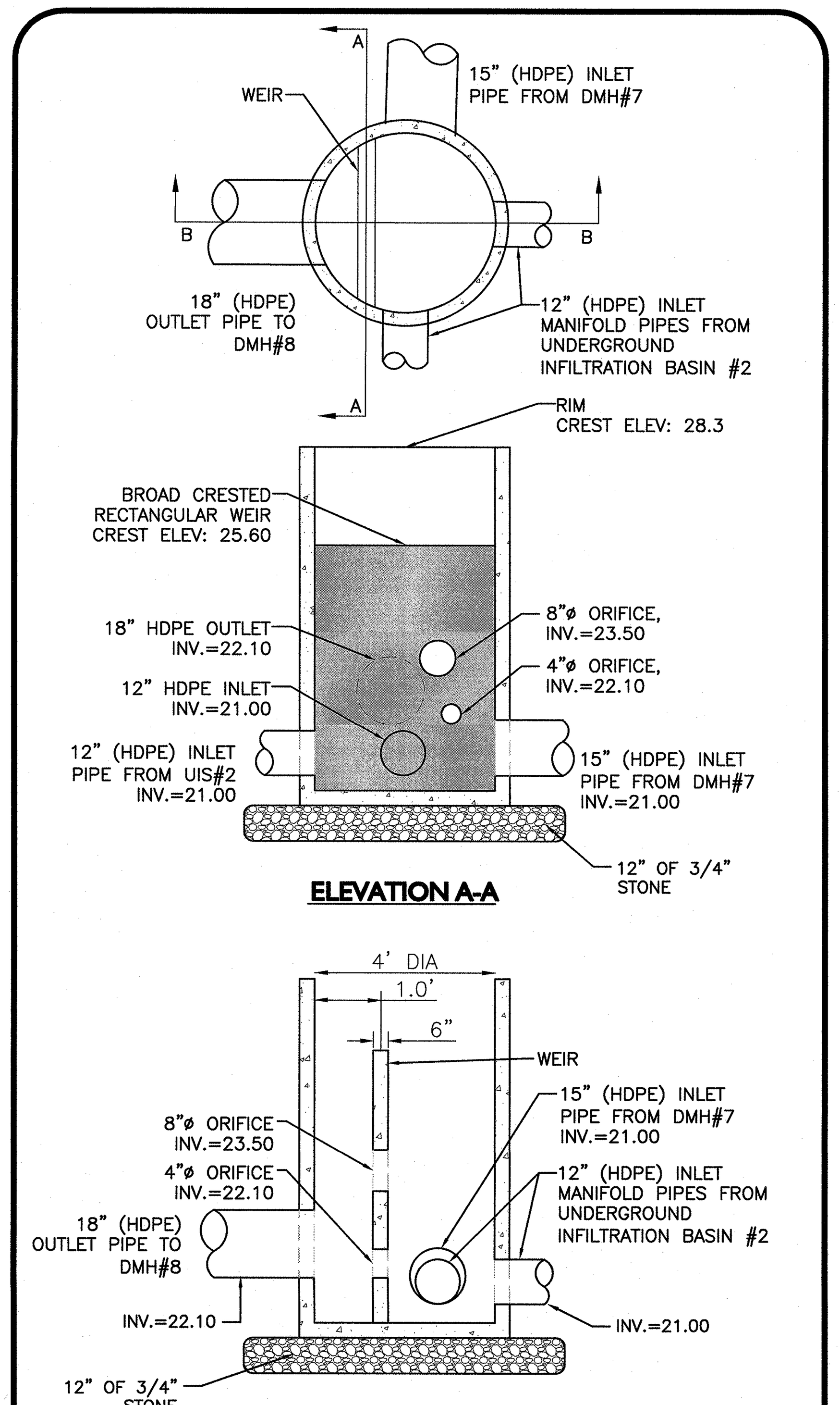

NOTES:

1. CONCRETE: 4,000 PSI MINIMUM AFTER 28 DAYS.
2. ALL REINFORCEMENT PER ASTM C1227-93.
3. TONGUE & GROOVE JOINT SEALED WITH BUTYLE RESIN OR MASTIC.
4. WALLS ARE TO BE 6" THICK & BOTTOM TO BE 8" THICK.
5. PROVIDE 4' SUMP

OUTLET CONTROL STRUCTURE #2 (2)
NOT TO SCALE

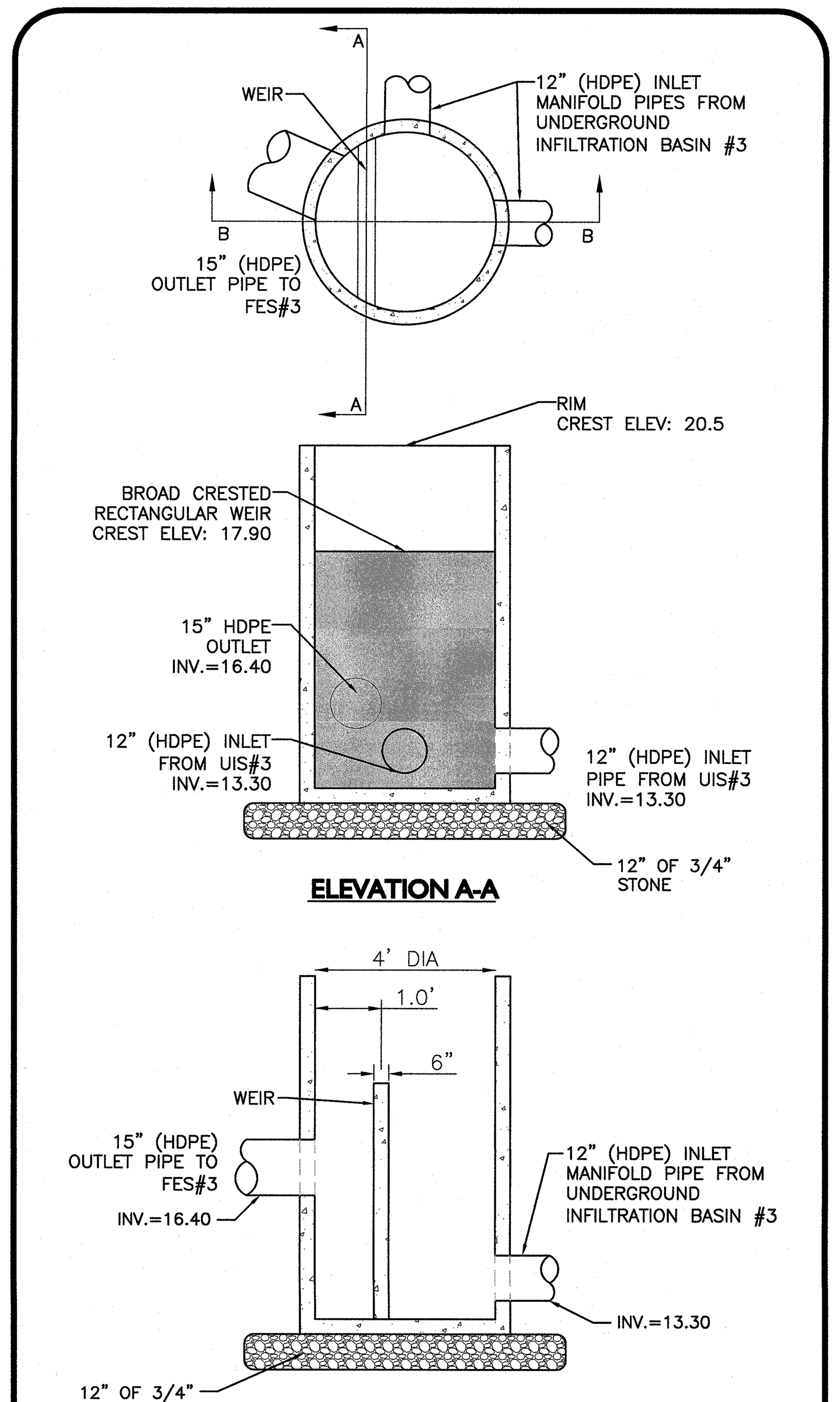

NOTES:

1. CONCRETE: 4,000 PSI MINIMUM AFTER 28 DAYS.
2. ALL REINFORCEMENT PER ASTM C1227-93.
3. TONGUE & GROOVE JOINT SEALED WITH BUTYLE RESIN OR MASTIC.
4. WALLS ARE TO BE 6" THICK & BOTTOM TO BE 8" THICK.
5. PROVIDE 4' SUMP

OUTLET CONTROL STRUCTURE #3A (3)
NOT TO SCALE

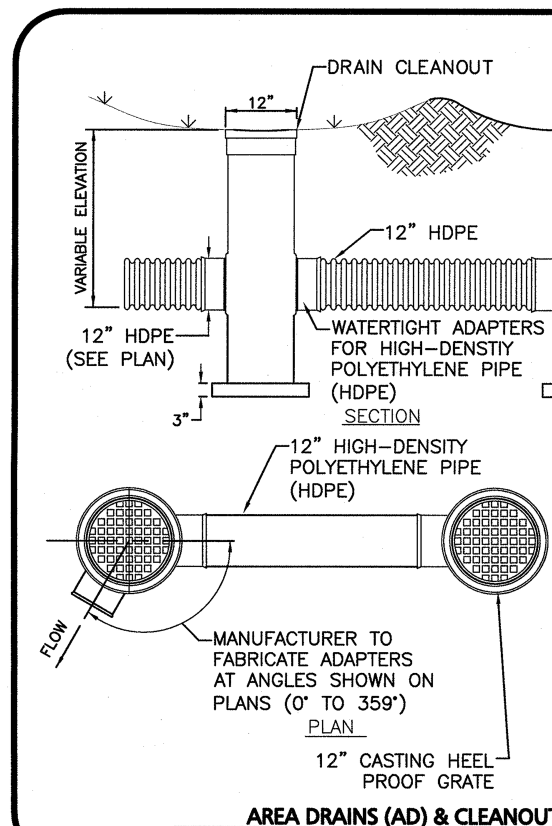

NOTES:
1. AREA DRAINS (AD) AND DRAIN CLEANOUTS (CO) SHALL BE HEAVY DUTY PVC (12" DIA.).
2. AREA DRAIN GRATES AND CLEANOUT SOLID COVERS SHALL BE HEAVY DUTY RATED H-20.
3. WATER-TIGHT CONNECTIONS SHALL MEET ASTM 3212 FOR POLYETHYLENE PIPE.
4. ALL COMPONENTS SHALL BE AS MANUFACTURED BY NYOPLAST U.S.A., INC. (770-932-2443) OR APPROVED EQUAL.

AREA DRAINS (AD) & CLEANOUTS (CO) (4)
NOT TO SCALE

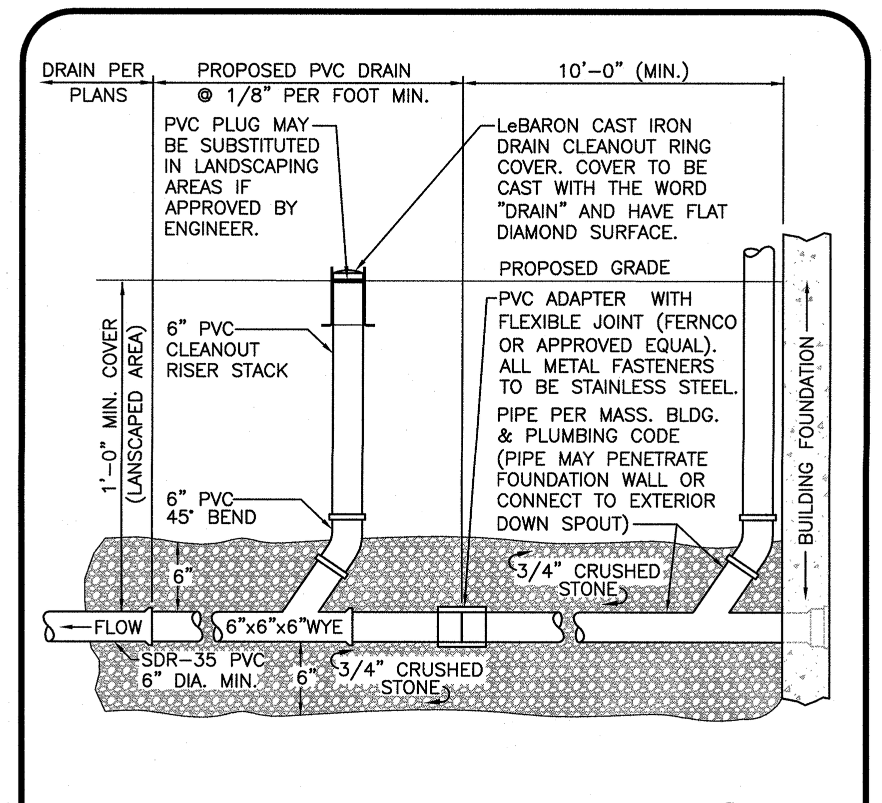

ROOF LEADER (5)
NOT TO SCALE

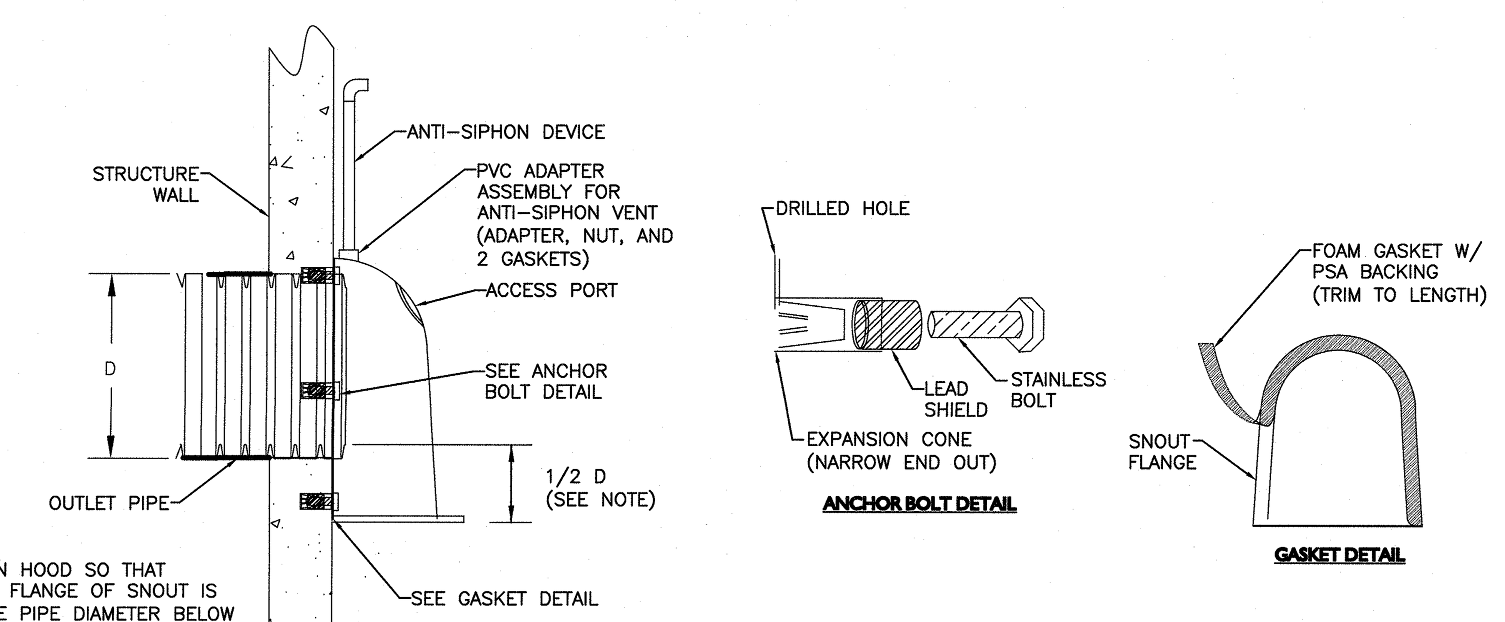

NOTE:
POSITION HOOD SO THAT BOTTOM FLANGE OF SNOUT IS 1/2 THE PIPE DIAMETER BELOW THE BOTTOM OF THE PIPE FOR PIPES >12" ID. FOR PIPES < 10" ID PLACE SNOUT 6" (MIN.) BELOW BOTTOM OF PIPE.

SNOUT OIL & DEBRIS STOP (6)
NOT TO SCALE

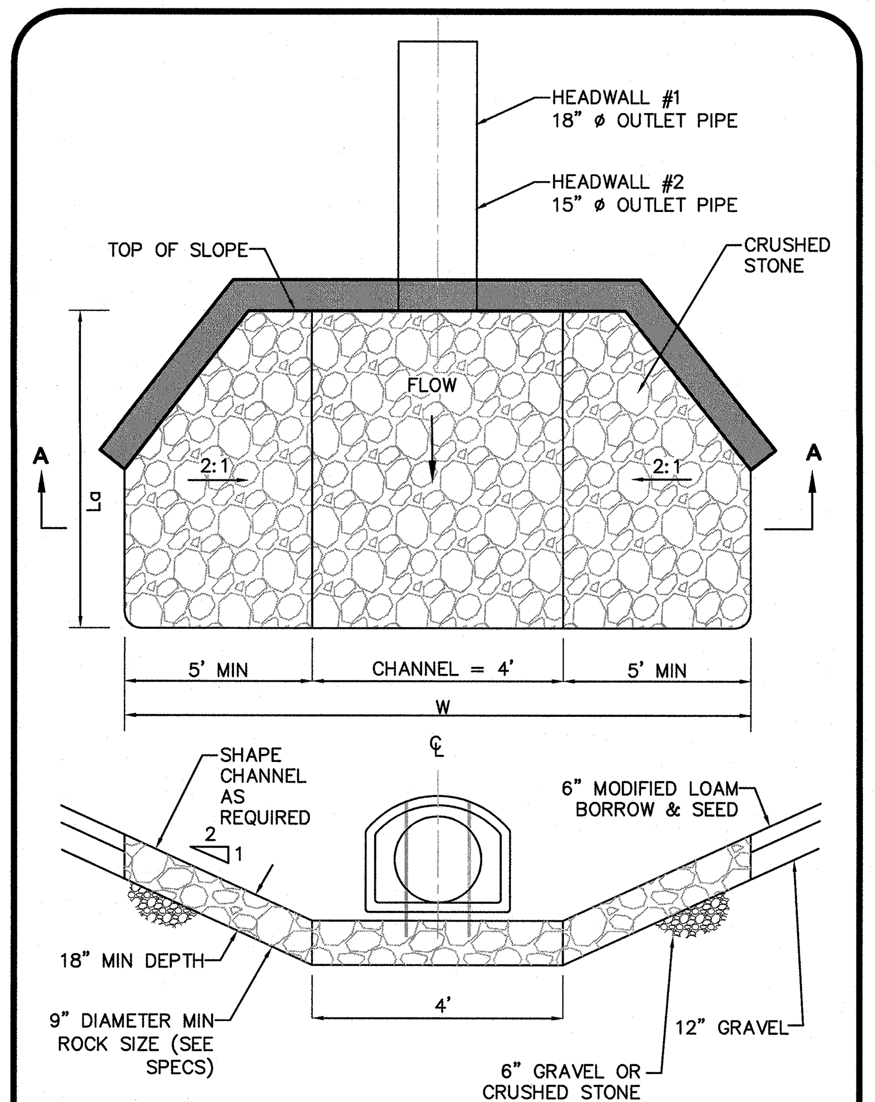

RIPRAP SIZING CHART

OUTLET	La	W	D50
HW#1	19.1'	23.6'	0.50
FES#1	11.3'	15.0'	0.50
FES#2	8.4'	11.4'	0.50
FES#3	16.0'	19.8'	0.50
FES#4	16.5'	21.0'	0.50

RIP RAP SHALL EXTEND FROM THE HEADWALL TO THE BOTTOM OF THE PROPOSED WETLAND AREA OR FURTHER AS SHOWN ON THE GRADING & DRAINAGE PLAN.

RIPRAP APRON (7)
NOT TO SCALE

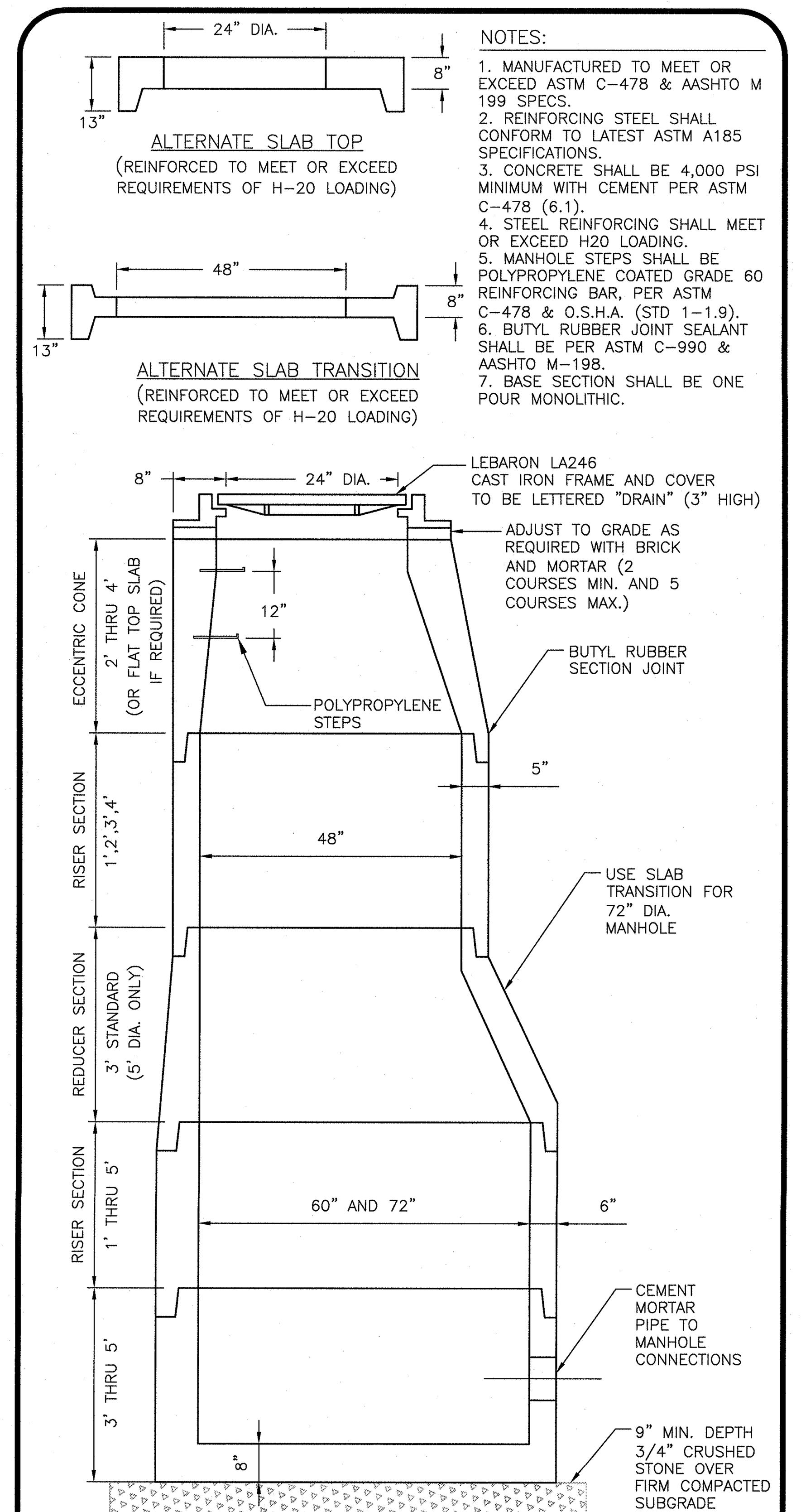

NOTES:
1. MANUFACTURED TO MEET OR EXCEED ASTM C-478 & AASHTO M 199 SPECS.
2. REINFORCING STEEL SHALL CONFORM TO LATEST ASTM A185 SPECIFICATIONS.
3. CONCRETE SHALL BE 4,000 PSI MINIMUM WITH CEMENT PER ASTM C-478 (6.1).
4. STEEL REINFORCING SHALL MEET OR EXCEED H20 LOADING.
5. MANHOLE STEPS SHALL BE POLYPROPYLENE COATED GRADE 60 REINFORCING BAR, PER ASTM C-478 & O.S.H.A. (STD 1-1.9).
6. BUTYL RUBBER JOINT SEALANT SHALL BE PER ASTM C-990 & AASHTO M-198.
7. BASE SECTION SHALL BE ONE POUR MONOLITHIC.

60" AND 72" DIAMETER PRECAST CONCRETE DRAIN MANHOLE (DMH) FOR PIPE DIAMETERS 24" AND GREATER (8)
(OR APPROVED EQUAL)

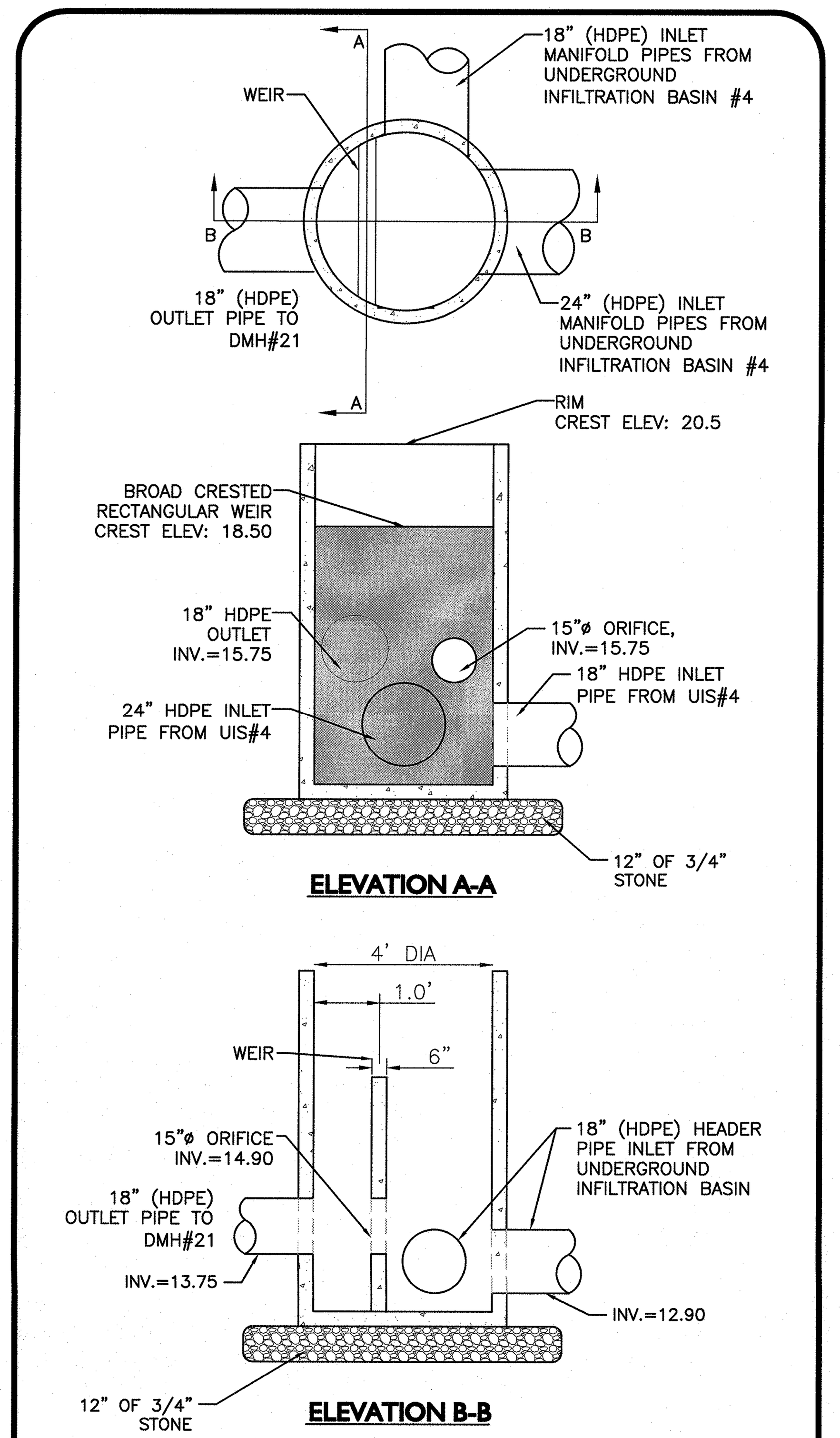

NOTES:

1. CONCRETE: 4,000 PSI MINIMUM AFTER 28 DAYS.
2. ALL REINFORCEMENT PER ASTM C1227-93.
3. TONGUE & GROOVE JOINT SEALED WITH BUTYLE RESIN OR MASTIC.
4. WALLS ARE TO BE 6" THICK & BOTTOM TO BE 8" THICK.
5. PROVIDE 4' SUMP

OUTLET CONTROL STRUCTURE #4 (9)
NOT TO SCALE

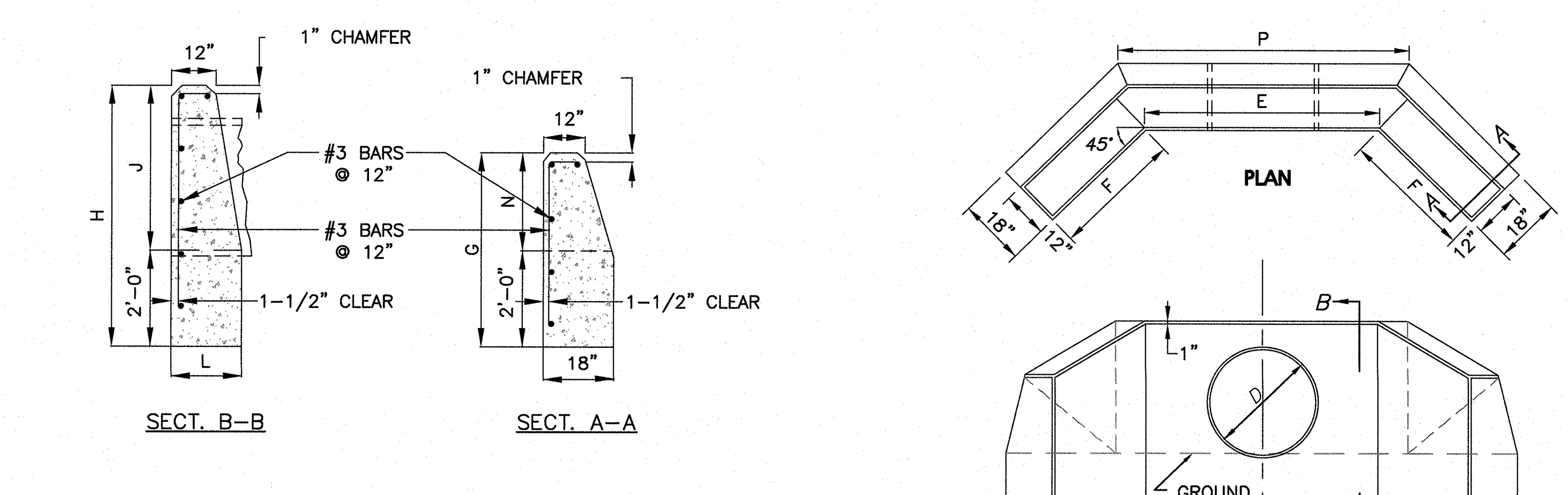

	1-1/2:1 AND 2:1 SLOPE							1-1/2:1 SLOPE			2:1 SLOPE		
D	E	G	H	J	L	N	P	F	CU. YDS.	LBS.	F	CU. YDS.	LBS.
30"	4'-0"	4'-0"	5'-6"	3'-6"	1'-6"	2'-0"	5'-3"	3'-0"	2.60	45	4'-3"	3.16	54
36"	4'-6"	4'-3"	6'-0"	4'-0"	1'-8"	2'-3"	5'-11"	3'-6"	3.35	54	5'-0"	4.15	64
42"	5'-0"	4'-6"	6'-6"	4'-6"	1'-10"	2'-6"	6'-6"	4'-0"	4.20	59	5'-9"	5.25	70
48"	5'-6"	4'-9"	7'-0"	5'-0"	2'-0"	2'-9"	7'-2"	4'-6"	5.19	65	6'-6"	6.50	83

NOTE: ALL CONCRETE DIMENSIONS SHOWN ARE MINIMUM.

CONCRETE HEADWALL (10)
NOT TO SCALE

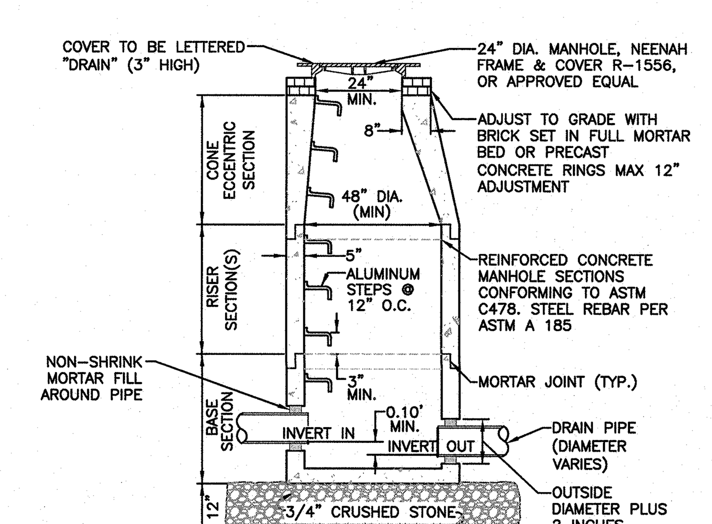

NOTE:
1. THE MANHOLE, INCLUDING ALL COMPONENT PARTS, SHALL HAVE ADEQUATE SPACE AND STRENGTH QUALITIES CONSIDERED NECESSARY FOR THE INTENDED SERVICE. SPACE REQUIREMENT AND CONFIGURATIONS SHALL BE AS SHOWN ON THE DRAWING. THE COMPLETE STRUCTURE SHALL BE OF SUCH MATERIAL AND QUALITY AS TO WITHSTAND (H-20 LOADING) WITHOUT FAILURE. VERTICAL FOOT OF MANHOLE.

2. ALL PIPE CONNECTIONS TO MANHOLES REQUIRE RUBBER BOOTS.

PRECAST DRAIN MANHOLE (11)
NOT TO SCALE

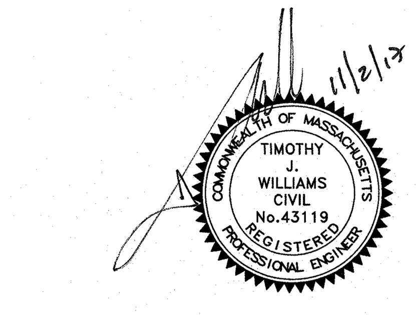

PROFESSIONAL ENGINEER FOR ALLEN & MAJOR ASSOCIATES, INC.

CUBE 3
architecture interiors planning
360 Merrimack Street Lawrence MA 01843
phone: 978.989.9900 www.cube3studio.com

project information:
BROADSTONE BARE COVE HINGHAM
230 BEAL ST.
HINGHAM, MA

client information:
Broadstone Bare Cove Alliance, LLC.

C/O Alliance Residential Company
184 High Street Suite 401 Boston, MA 02110

consultant information:
PREPARED BY:
ALLEN & MAJOR ASSOCIATES, INC.
civil & structural engineering ◆ land surveying
environmental consulting ◆ landscape architecture
www.allenmajor.com
100 COMMERCE WAY
WOBURN MA 01801
TEL: (781) 935-6889
FAX: (781) 935-2896
WOBURN, MA ◆ LAKEVILLE, MA ◆ MANCHESTER, NH

issuance:
COMPREHENSIVE PERMIT APPLICATION PLANS
NOT FOR CONSTRUCTION

key plan:

drawing information:

drawing by:	SJL
drawing checked by:	CMQ
drawing scale:	1"=40'
drawing date:	12 AUGUST 2017
project number:	2118-02

drawing revisions:

No.	Description	Date
1	Issued for ZBA Resubmittal	10/25/16
2	Issued for ZBA Resubmittal	11/02/16
3	Issued for ZBA Resubmittal	01/04/17
4	Issued for ZBA Resubmittal	01/19/17
5	Issued for ZBA Resubmittal	02/14/17
6	Issued for ZBA Resubmittal	03/29/17
7	Issued for ZBA Resubmittal	04/11/17
8	Modifications to Project Plans	11/02/17

registration:

drawing name: DETAILS

drawing number: D-3

N:\PROJECTS\2118-02\CIVIL\DRAWINGS\CURRENT\C-2118-02 - DETAILS.DWG

COPYRIGHT (C) 2017 CUBE 3 STUDIO LLC, ALL RIGHTS RESERVED

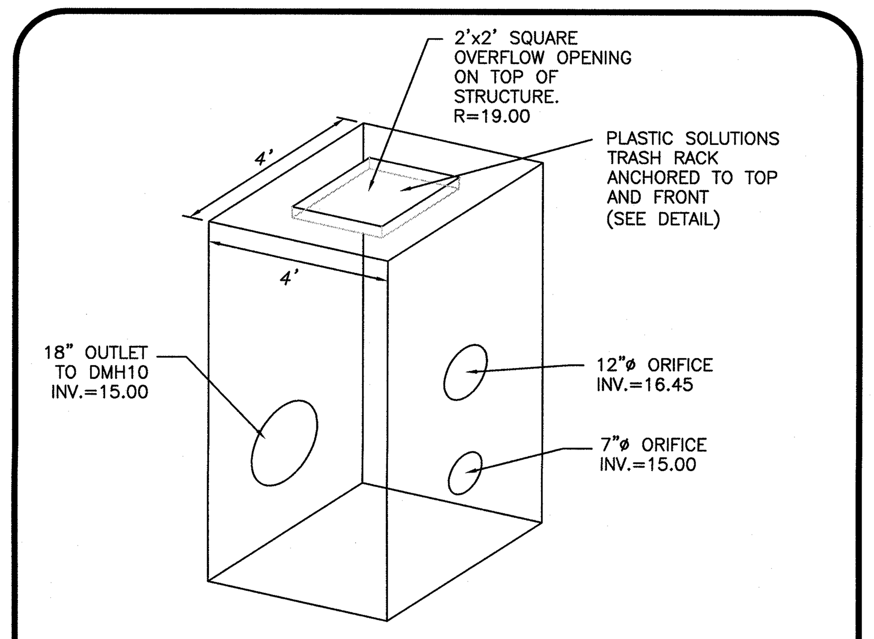

NOTE:
CONTRACTOR SHALL SUBMIT SHOP DRAWINGS TO THE DESIGN ENGINEER FOR APPROVAL PRIOR TO PURCHASE AND INSTALLATION

OUTLET CONTROL STRUCTURE #3B (1)
NOT TO SCALE

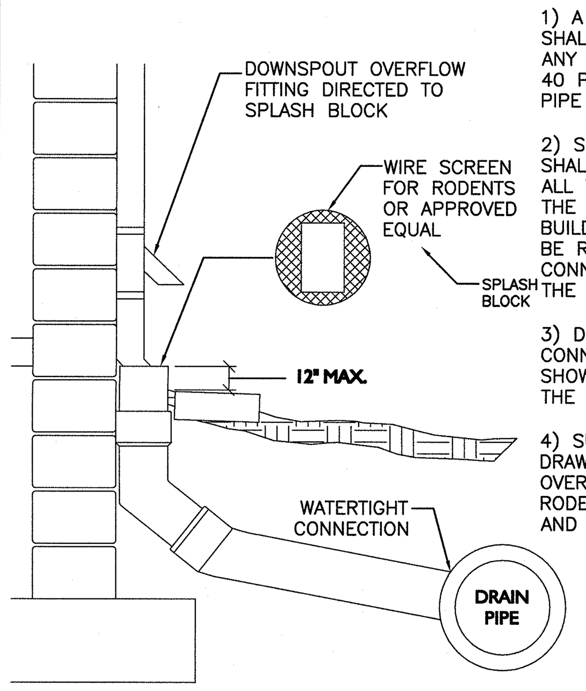

NOTES:

1) A WATERTIGHT CONNECTION SHALL BE MAINTAINED FROM ANY TRANSITION FROM SCH. 40 PVC PIPE TO ANY OTHER PIPE TYPE.

2) SITEWORK CONTRACTOR SHALL BE RESPONSIBLE FOR ALL WORK TO AND INCLUDING THE RODENT SCREEN. BUILDING CONTRACTOR SHALL BE RESPONSIBLE FOR THE CONNECTION AT THE POINT OF THE RODENT SCREEN.

3) DOWNSPOUTS SHALL BE CONNECTED IN THE MANNER SHOWN AND CONVEYED TO THE NEAREST STORM DRAIN.

4) SUBMIT SHOP DRAWINGS FOR DOWNSPOUT OVERFLOW, SPLASH BACK, RODENT SCREEN, FITTINGS AND PIPE.

TYPICAL ROOF DRAIN (RD) DOWNSPOUT COLLECTOR (2)
NOT TO SCALE

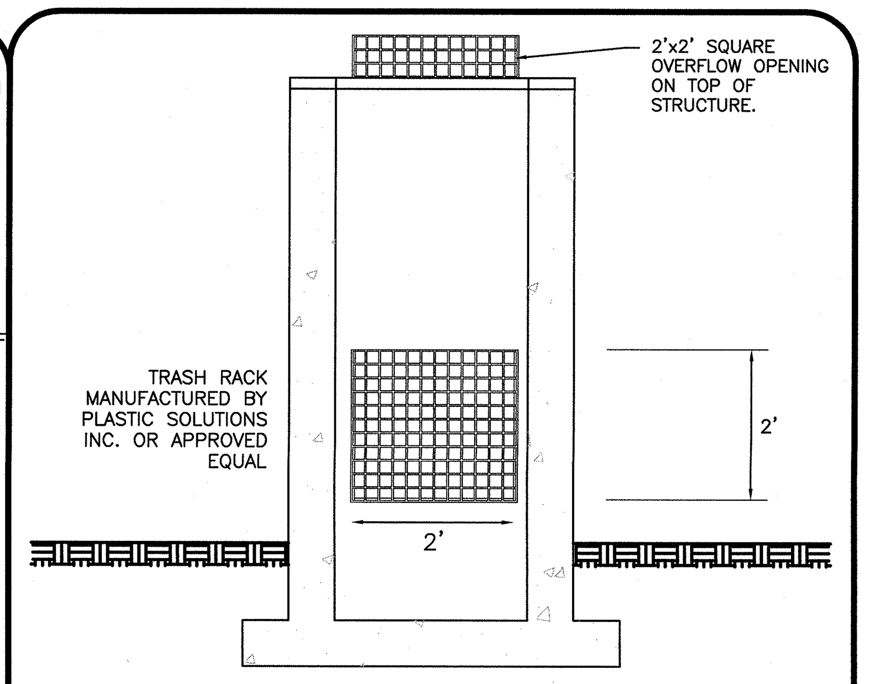

FLAT ROOF TRASH RACK FOR OCS #3 (3)
NOT TO SCALE

NOTES:
1. HINGE MECHANISM TO BE PROVIDED.
2. TRASH RACK SHALL BE HOT-DIP GALVANIZED AFTER FABRICATION.
3. ALL MATERIALS TO BE NON-CORROSIVE.
4. SMALL CONCRETE PAD TO BE INSTALLED UNDERNEATH ORIFICE.

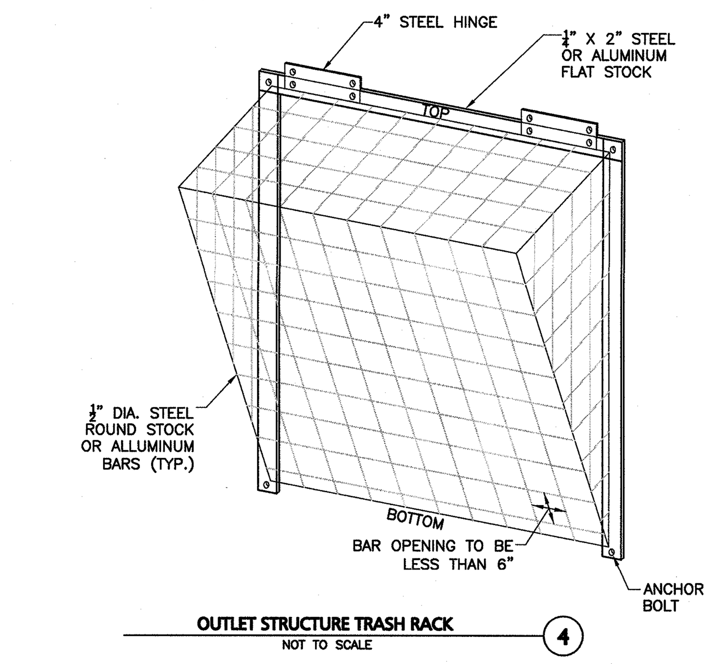

OUTLET STRUCTURE TRASH RACK (4)
NOT TO SCALE

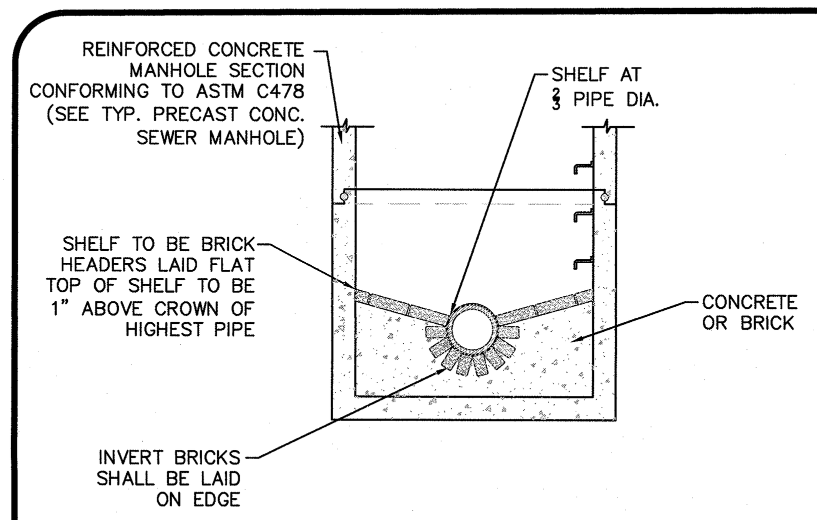

NOTES:

1. INVERT AND SHELF TO BE PLACED AFTER LEAKAGE TEST.
2. MANHOLES SHALL HAVE A BRICK PAVED SHELF AND INVERT, CONSTRUCTED TO CONFORM TO THE SIZE OF PIPE AND FLOW. AT CHANGES IN DIRECTION, THE INVERTS SHALL BE LAID OUT IN CURVES OF THE LONGEST RADIUS POSSIBLE TANGENT TO THE CETER LINE OF THE HIGHEST PIPE CROWN AND SLOPE TO DRAIN TOWARD THE FLOWING THROUGH CHANNEL. UNDERLAYMENT OF INVERT AND SHELF SHALL CONSIST OF CEMENT CONCRETE OR BRICK IN MORTAR.

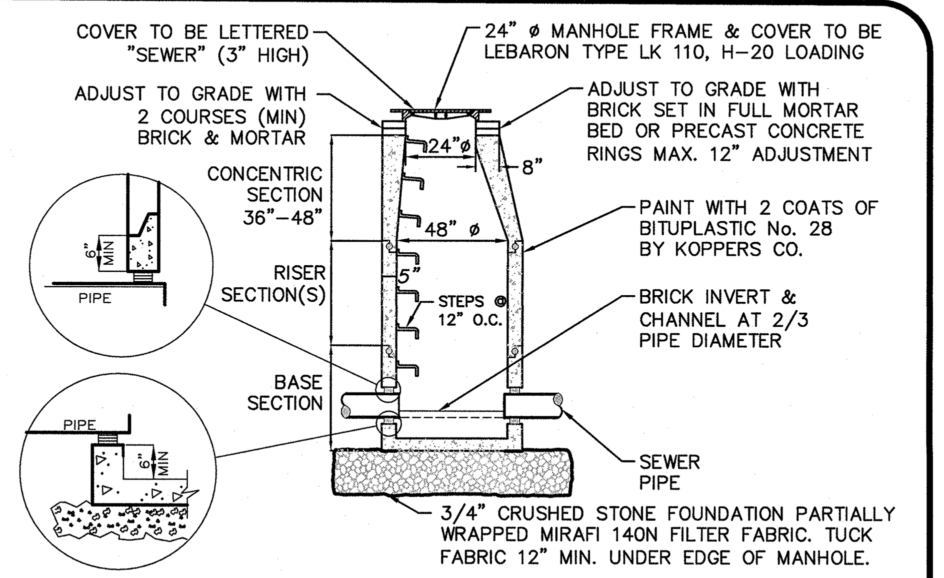

NOTE:
THE MANHOLE, INCLUDING ALL COMPONENT PARTS, SHALL HAVE ADEQUATE SPACE, STRENGTH AND LEAK PROOF QUALITIES CONSIDERED NECESSARY FOR THE INTENDED SERVICE SPACE REQUIREMENT AND CONFIGURATIONS SHALL BE AS SHOWN ON THE DRAWING. MANHOLES MAY BE AN ASSEMBLY OR PRECAST SECTIONS, WITH OR WITHOUT STEEL REINFORCEMENT, WITH ADEQUATE JOINTING OR CONCRETE CAST MONOLITHICALLY IN PLACE WITH OR WITHOUT REINFORCEMENT. IN ANY APPROVED MANHOLE, THE COMPLETE STRUCTURE SHALL BE OF SUCH MATERIAL AND QUALITY AS TO WITHSTAND LOADS OF 8 TONS (H-20 LOADING) WITHOUT FAILURE AND PREVENT LEAKAGE IN EXCESS OF ONE GALLON PER DAY PER VERTICAL FOOT OF MANHOLE.

PRECAST CONCRETE SEWER MANHOLE (SMH) (5)
NOT TO SCALE

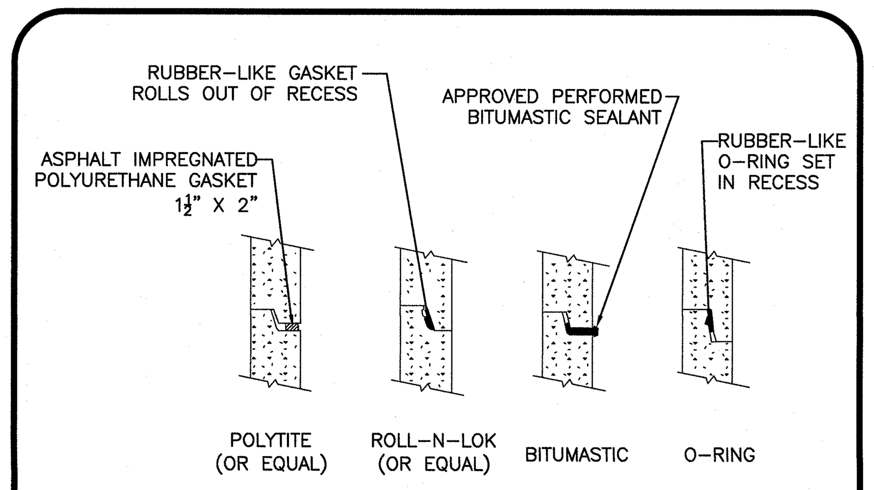

NOTES:
1. HORIZONTAL JOINTS BETWEEN SECTIONS OF PRECAST CONCRETE BARRELS SHALL BE OF A TYPE APPROVED BY THE ENGINEER, WHICH TYPE SHALL, IN GENERAL, DEPEND FOR WATER TIGHTNESS UPON AN ELASTOMERIC OR MASTIC-LIKE GASKET.
2. ALL GASKETS AND SEALANTS SHALL BE INSTALLED IN ACCORDANCE WITH MANUFACTURER'S WRITTEN INSTRUCTIONS.
3. FOR BITUMASTIC TYPE JOINTS THE AMOUNT OF SEALANT SHALL BE SUFFICIENT TO FILL AT LEAST 75% OF THE JOINT CAVITY.

SEWER MANHOLE JOINTING METHODS (6)
NOT TO SCALE

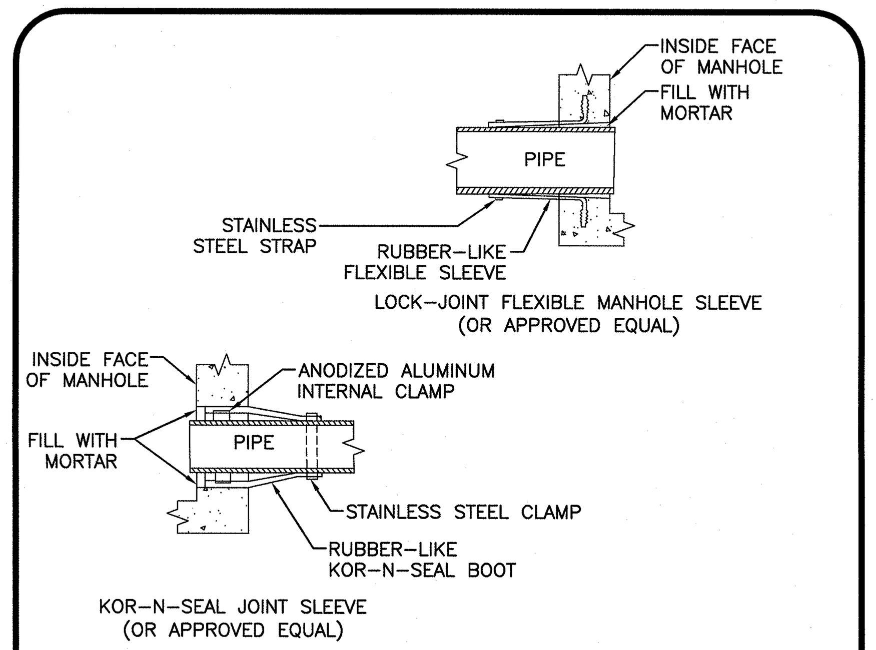

NOTES:
1. PIPE TO MANHOLE JOINTS SHALL BE ONLY AS APPROVED BY THE ENGINEER AND IN GENERAL, WILL DEPEND FOR WATER TIGHTNESS UPON ELASTOMETRIC SEALANT
2. NON-SHRINKING MORTAR SHALL ONLY BE USED WHERE SPECIFICALLY APPROVED BY THE ENGINEER.

PIPE CONNECTIONS TO SEWER MANHOLE (7)
NOT TO SCALE

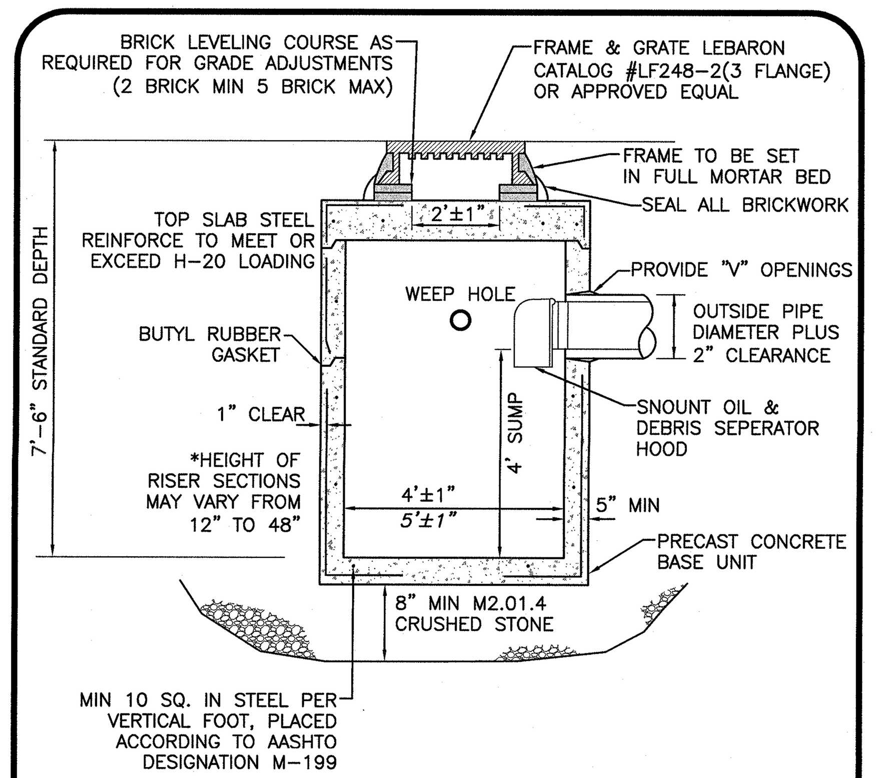

CATCH BASIN (8)
NOT TO SCALE

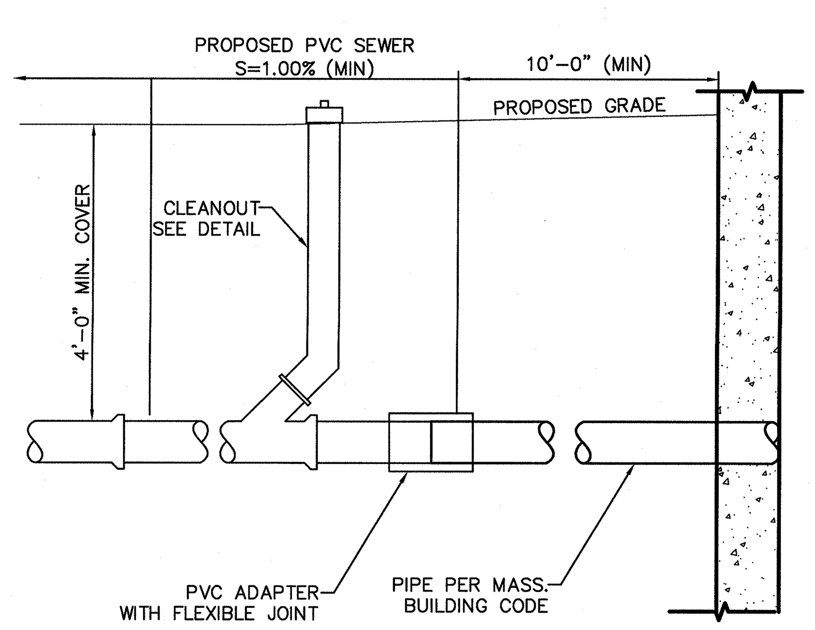

BUILDING SEWER SERVICE (9)
NOT TO SCALE

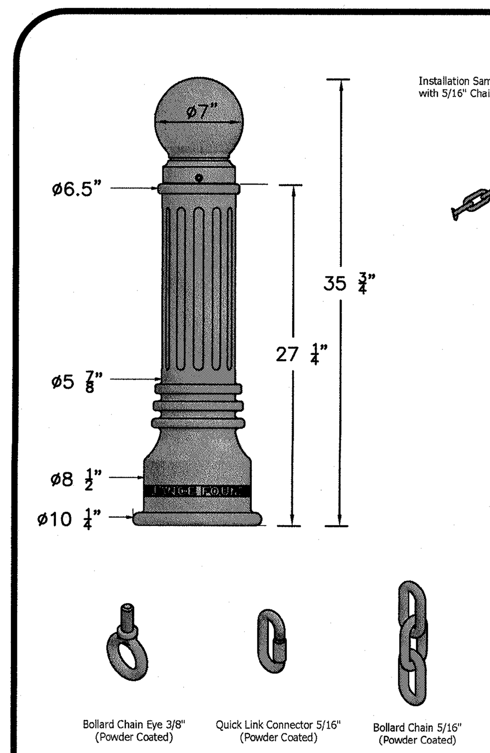

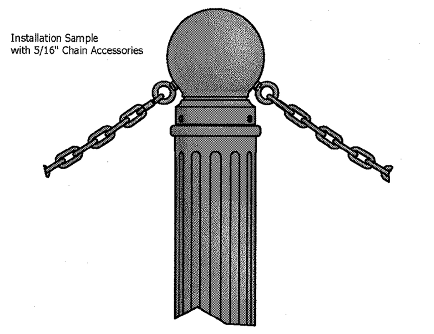

NOTES:
1) STATIONARY BOLLARD AND CHAIN SHALL BE A RELIANCE FOUNDRY R-7539 BOLLARD OR EQUAL.
2) CONTRACTOR TO SUBMIT SHOP DRAWING TO OWNER FOR APPROVAL PRIOR TO INSTALLATION.
3) SEE LAYOUT & MATERIALS PLAN FOR LOCATION OF BOLLARDS.

STATIONARY BOLLARD AND CHAIN AT SHADLY GLENN (10)
NOT TO SCALE

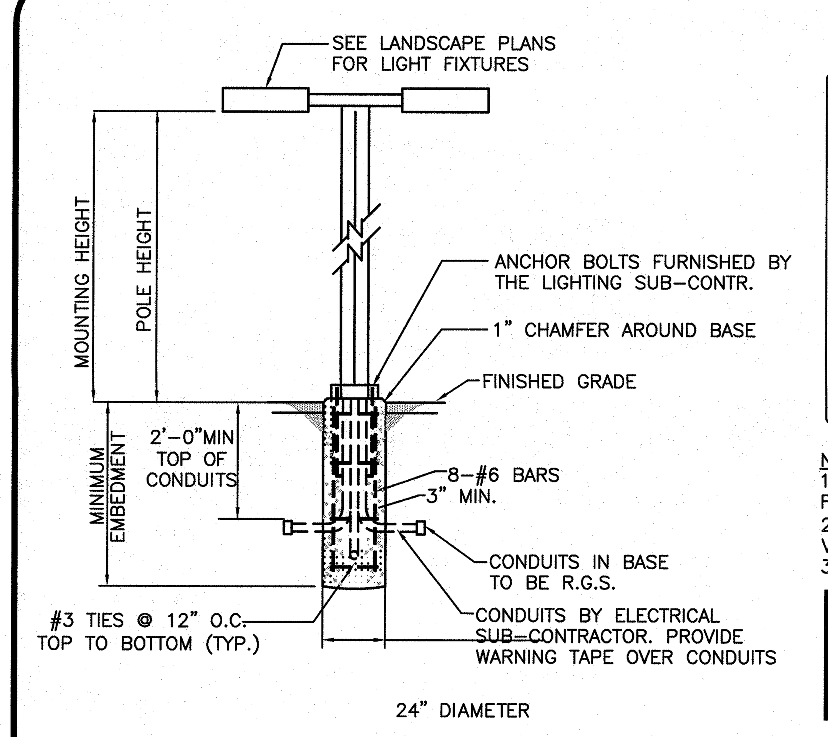

FLUSH LIGHT POLE BASE - 2' DIAMETER
NOT TO SCALE

MINIMUM EMBEDMENT GUIDE (ROUND BASE)
24" DIAMETER ROUND POLE BASE

MINIMUM EMBEDMENT		
	POLE HEIGHT	BASES IN GRAVEL AND SANDY SOILS (GW, GP, SW, SP, SM, SC, GM,GC)
	≤15'	4'-6"
	15'-20'	5'-0"
	20'-25'	5'-6"
	25'-30'	5'-6"
	30'-35'	6'-0"
	POLE HEIGHT	BASES IN CLAYEY SOILS (CL, ML, CH, MH)
	≤15'	8'-0"
	15'-20'	9'-0"
	20'-25'	10'-0"
	25'-30'	10'-6"
	30'-35'	11'-6"

NOTES:
1. RAISED LIGHT POLE TO BE USED IN PARKING LOTS. FLUSH LIGHT POLES TO BE USED IN OTHER AREAS.
2. BASES FOR LIGHTS MOUNTED HIGHER THAN 35' TO BE VERIFIED BY STRUCTURAL ENGINEER.
3. SEE LANDSCAPE PLANS FOR LIGHTING DETAILS.

NOTE:
1. THE CONTRACTOR SHALL SUBMIT A SHOP DRAWING OF THE SITE LIGHTING FIXTURES TO THE DEVELOPMENT TEAM FOR REVIEW PRIOR TO INSTALLATION IN THE FIELD.

LIGHT POLE BASE (11)
NOT TO SCALE

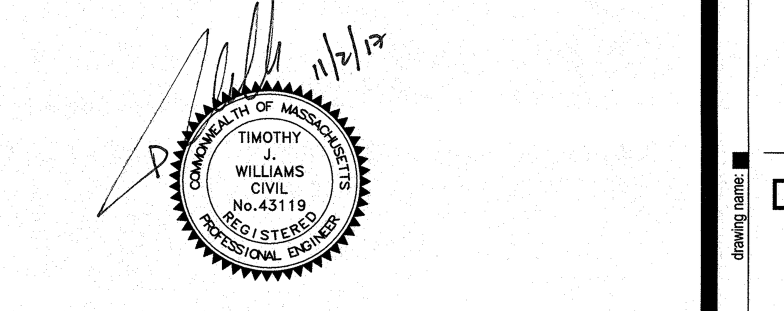

PROFESSIONAL ENGINEER FOR
ALLEN & MAJOR ASSOCIATES, INC.

CUBE 3
architecture interiors planning
360 Merrimack Street Lawrence MA 01843
phone: 978.989.9900 www.cube3studio.com

project information:
BROADSTONE
BARE COVE
HINGHAM
230 BEAL ST.
HINGHAM, MA

client information:
Broadstone Bare Cove Alliance, LLC.

C/O Alliance
Residential Company
184 High Street Suite
401 Boston, MA 02110

consultant information:
PREPARED BY:
ALLEN & MAJOR ASSOCIATES, INC.
civil & structural engineering ♦ land surveying
environmental consulting ♦ landscape architecture
www.allenmajor.com
100 COMMERCE WAY
WOBURN MA 01801
TEL: (781) 935-6889
FAX: (781) 935-2896
WOBURN, MA ♦ LAKEVILLE, MA ♦ MANCHESTER, NH

issuance:
COMPREHENSIVE PERMIT APPLICATION PLANS
NOT FOR CONSTRUCTION

key plan:

drawing information:

drawing by:	SJL
drawing checked by:	CMQ
drawing scale:	1"=40'
drawing date:	12 AUGUST 2017
project number:	2118-02

drawing revisions:

No.	Description	Date
1	Issued for ZBA Resubmittal	10/25/16
2	Issued for ZBA Resubmittal	11/02/16
3	Issued for ZBA Resubmittal	01/04/17
4	Issued for ZBA Resubmittal	01/19/17
5	Issued for ZBA Resubmittal	02/14/17
6	Issued for ZBA Resubmittal	03/29/17
7	Issued for ZBA Resubmittal	04/11/17
8	Modifications to Project Plans	11/02/17

registration:

drawing name:
DETAILS

drawing number:
D-4

N:\PROJECTS\2118-02\CIVIL\DRAWINGS\CURRENT\C-2118-02 - DETAILS.DWG

COPYRIGHT (C) 2017 CUBE 3 STUDIO LLC, ALL RIGHTS RESERVED

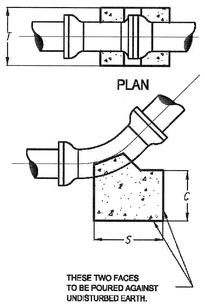

PIPE DIAMETER	BEND	BLOCK DIMENSIONS S IN.	T IN.	U IN.	CONCRETE VOLUME CU.YD.
16	90	48	48	48	2.40
	45	48	34	20	0.70
	22 1/2	42	20	18	0.35
	11 1/4				SEE NOTE 3
12	90	36	36	36	1.00
	45	36	24	18	0.34
	22 1/2	28	18	12	0.13
	11 1/4				SEE NOTE 3
10	90	30	30	30	0.60
	45	30	20	18	0.23
	22 1/2	22	16	12	0.10
	11 1/4				SEE NOTE 3
8	90	24	24	24	0.30
	45	24	18	12	0.10
	22 1/2	18	12	12	0.06
	11 1/4				SEE NOTE 3
6	90	18	18	18	0.13
	45	18	12	12	0.06
	11 1/4	12	12	12	0.04
					SEE NOTE 3

NOTES:

1. 2500 psi CONCRETE TO BE USED
2. BLOCK DIMENSIONS ARE BASED UPON SOIL BEARING PRESSURE OF 2000 psi AND WATER PRESSURE OF 150 psi. WHERE SOIL BEARING IS LESS OR WATER PRESSURE IS GREATER, A SPECIAL DESIGN WILL BE REQUIRED.
3. BEND TO BE SET AGAINST UNDISTURBED EARTH, BACKFILL TO BE FIRMLY TAMPED, OR BLOCK TO BE FURNISHED AS DIRECTED BY THE ENGINEER.

AQUARION Water Company
Stewards of the Environment

THRUST BLOCKS AT SAG VERTICAL BENDS (1)
NOT TO SCALE

* IN DISTURBED GRASS AREAS, RESTORE TO ORIGINAL CONDITION WITH: 2" TOPSOIL (MIN.) OR SOD (LIVE SOD ON 4" TOPSOIL BED)

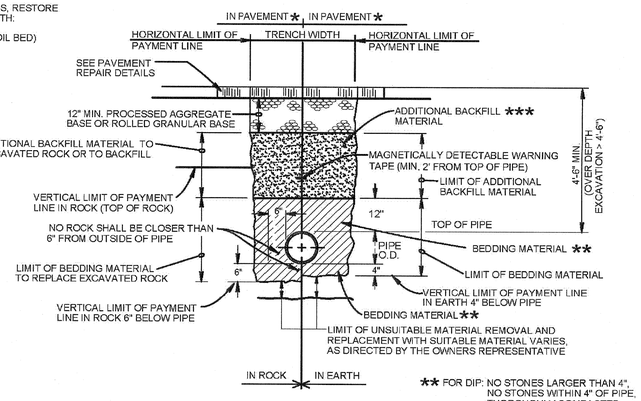

REFER TO THE STANDARD DETAILS FOR TEMPORARY AND PERMANENT PAVEMENT REPAIR

HORIZONTAL PAYMENT LIMITS FOR TEMPORARY PAVEMENT, ROCK, BEDDING MATERIAL & ADDITIONAL BACKFILL MATERIAL

PIPE SIZE	TRENCH WIDTH
6"	4'-0"
8"	4'-0"
12"	4'-0"
16"	4'-0"
20"	5'-0"
24"	5'-0"
30"	6'-0"
36"	6'-0"

NOTE: IF TRENCH BOXES ARE USED ADD 2' TO ALL TRENCH WIDTHS

** FOR DIP: NO STONES LARGER THAN 4", NO STONES WITHIN 4" OF PIPE, THOROUGHLY COMPACTED
FOR HDPE: NO STONES LARGER THAN 3/4", NO STONES WITHIN 4" OF PIPE, THOROUGHLY COMPACTED

***(NO STONES LARGER THAN 12") (COMPACTED IN 12" LIFTS)

AQUARION Water Company
Stewards of the Environment

TYPICAL TRENCH DETAIL (2)
NOT TO SCALE

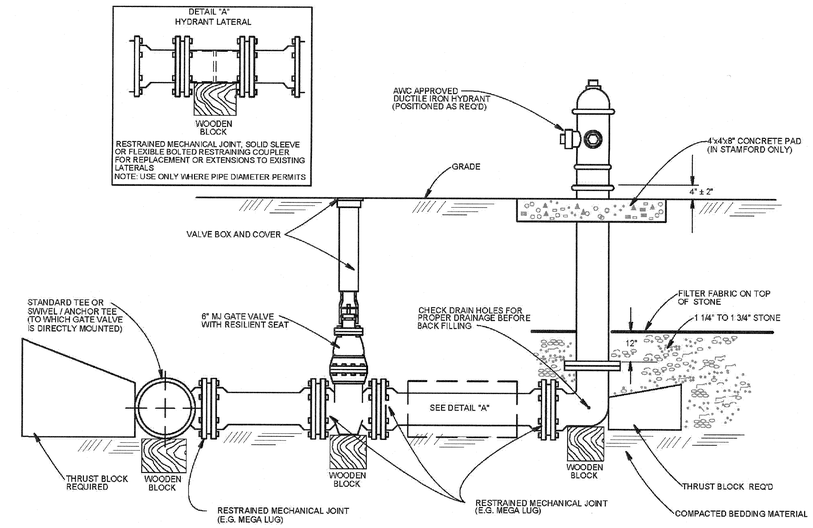

AQUARION Water Company
Stewards of the Environment

FIRE HYDRANT ASSEMBLY (DIP) (3)
NOT TO SCALE

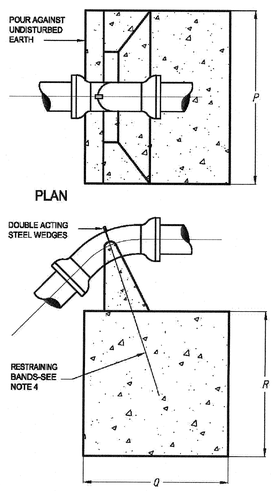

PIPE DIAMETER	BEND	BLOCK DIMENSIONS P IN.	Q IN.	R IN.	CONCRETE VOLUME CU.YD.
16	45	72	60	56	5.2
	22 1/2	50	48	44	2.7
	11 1/4	60	36	36	1.7
12	45	60	48	48	3.0
	22 1/2	42	42	40	1.5
	11 1/4	34	34	34	0.94
10	45	54	42	42	2.0
	22 1/2	36	36	36	1.0
	11 1/4	30	30	30	0.58
8	45	48	36	36	1.3
	22 1/2	32	32	32	0.71
	11 1/4	26	26	26	0.38
6	45	42	30	28	0.76
	22 1/2	26	26	26	0.38
	11 1/4	24	24	24	0.30

NOTES:

1. 2500 psi CONCRETE TO BE USED
2. BLOCK DIMENSIONS ARE BASED UPON SOIL BEARING PRESSURE OF 2000 psi AND WATER PRESSURE OF 150 psi. WHERE SOIL BEARING IS LESS OR WATER PRESSURE IS GREATER, A SPECIAL DESIGN WILL BE REQUIRED.
3. WHERE 90° CREST VERTICAL BEND IS REQUIRED APPROVAL MUST FIRST BE OBTAINED FROM THE ENGINEER. A SPECIAL DESIGN WILL BE REQUIRED.
4. 2 - # 8 REINFORCING RODS REQUIRED FOR 16" 45° BEND; 1 - # 8 REINFORCING ROD REQUIRED FOR ALL OTHER BENDS. EXPOSED BARS TO BE PROVIDED WITH PROTECTIVE COATING.

NOTE:
IN ADDITION TO THE CONCRETE THRUST BLOCKS, ALL FITTINGS TO BE TIED TOGETHER WITH 3/4" GALVANIZED THREADED RODS, AND ANY OTHER SPECIALS AS DIRECTED BY THE WATER COMPANY.

AQUARION Water Company
Stewards of the Environment

THRUST BLOCKS AT CREST VERTICAL BENDS (4)
NOT TO SCALE

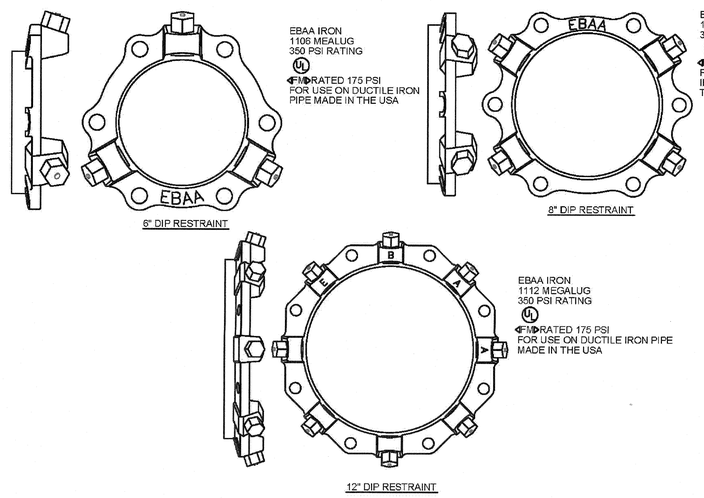

AQUARION Water Company
Stewards of the Environment

DUCTILE IRON PIPE RESTRAINTS (5)
NOT TO SCALE

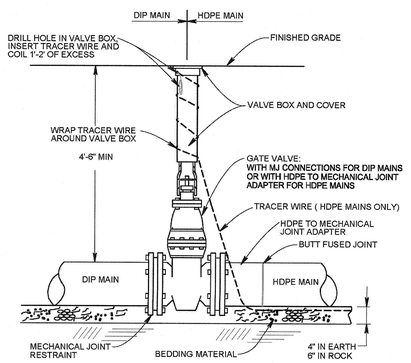

NOTE: ONLY INSTALLED ON MAINS 8" AND SMALLER

NOTE: FOR CONTINUOUS HDPE MAINS, INSTALL TRACER WIRE UNDER ALL VALVES AND FITTINGS. FOR TERMINATION POINTS, INSTALL TRACER WIRE AROUND VALVE BOXES AS SHOWN ABOVE.

AQUARION Water Company
Stewards of the Environment

GATE VALVE (6)
NOT TO SCALE

11/2/17

COMMONWEALTH OF MASSACHUSETTS
TIMOTHY J. WILLIAMS
CIVIL
No. 43119
REGISTERED PROFESSIONAL ENGINEER

PROFESSIONAL ENGINEER FOR
ALLEN & MAJOR ASSOCIATES, INC.

CUBE 3
architecture interiors planning
300 Merrimack Street Lawrence MA 01843
phone: 978.989.0900 www.cube3studio.com

project information:
BROADSTONE BARE COVE
HINGHAM
230 BEAL ST.
HINGHAM, MA

client information:
Broadstone Bare Cove Alliance, LLC.

C/O Alliance Residential Company
184 High Street Suite 401 Boston, MA 02110

consultant information:
Prepared by
ALLEN & MAJOR ASSOCIATES, INC.
100 CONGRESS WAY
SUITE 200
WOBURN, MA
TEL: (781) 933-5600
FAX: (781) 933-2896
WOBURN, MA • LAKEVILLE, MA • MANCHESTER, NH

issuance:
COMPREHENSIVE PERMIT APPLICATION PLANS
NOT FOR CONSTRUCTION

key plan:

drawing information:

drawing by:	SJL
drawing checked by:	CMQ
drawing scale:	1"=40'
drawing date:	12 AUGUST 2017
project number:	2118-02

drawing revisions:

No.	Description	Date
1	Issued for ZBA Resubmittal	10/25/16
2	Issued for ZBA Resubmittal	11/02/16
3	Issued for ZBA Resubmittal	01/04/17
4	Issued for ZBA Resubmittal	01/19/17
5	Issued for ZBA Resubmittal	02/14/17
6	Issued for ZBA Resubmittal	03/29/17
7	Issued for ZBA Resubmittal	04/11/17
8	Modifications to Project Plans	11/02/17

registration:

drawing name:
DETAILS

drawing number:
D-5

N:\PROJECTS\2118-02\CIVIL\DRAWINGS\CURRENT\C-2118-02 - DETAILS.DWG

COPYRIGHT (C) 2017 CUBE 3 STUDIO LLC, ALL RIGHTS RESERVED

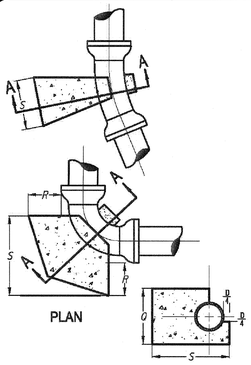

PIPE DIAM. IN	BLOCK DIMENSIONS				CONCRETE VOLUME CU. YD.
	BEND	S IN.	Q IN.	R IN.	
16	90	48	48	48	2.37
	45	48	34	20	0.70
	22 1/2	42	20	18	0.32
	11 1/4				SEE NOTE 3
12	90	36	36	36	1.00
	45	36	24	18	0.33
	22 1/2	28	18	12	0.13
	11 1/4				SEE NOTE 3
10	90	30	30	30	0.80
	45	30	20	18	0.23
	22 1/2	22	18	12	0.09
	11 1/4				SEE NOTE 3
8	90	24	24	24	0.30
	45	24	18	12	0.20
	22 1/2	18	12	12	0.11
	11 1/4				SEE NOTE 3
6	90	18	18	18	0.25
	45	18	12	12	0.11
	22 1/2	12	12	12	0.07
	11 1/4				SEE NOTE 3

NOTES:
1. 2500 psi CONCRETE TO BE USED
2. BLOCK DIMENSIONS ARE BASED UPON SOIL BEARING PRESSURE OF 2000 psi AND WATER PRESSURE OF 150 psi. WHERE SOIL BEARING IS LESS OR WATER PRESSURE IS GREATER, A SPECIAL DESIGN WILL BE REQUIRED.
3. SEE SAG VERTICAL (ABOVE)

AQUARION Water Company
Stewards of the Environment

THRUST BLOCKS AT HORIZONTAL BENDS (1)
NOT TO SCALE

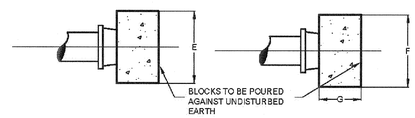

PLAN ELEVATION

NOTES:
1. 2500 psi CONCRETE TO BE USED
2. BLOCK DIMENSIONS ARE BASED UPON SOIL BEARING PRESSURE OF 2000 psi AND WATER PRESSURE OF 150 psi. WHERE SOIL BEARING IS LESS OR WATER PRESSURE IS GREATER, A SPECIAL DESIGN WILL BE REQUIRED.
3. FOR USE ON ABANDONED LINES AND DEAD ENDS WHERE NO EXTENSION IS CONTEMPLATED.

PIPE DIAM. IN	BLOCK DIMENSIONS			CONCRETE VOLUME CU. YD.
	E IN	F IN	G IN	
6	20	16	12	0.08
8	28	20	12	0.15
10	30	24	12	0.19
12	42	30	14	0.40
16	52	42	18	0.85

CAPS, PLUGS AND VALVES

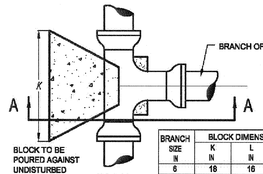

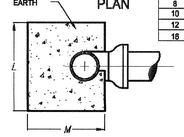

SECTION AA

BRANCH SIZE IN	BLOCK DIMENSIONS			CONCRETE VOLUME CU. YD.
	K IN	L IN	M IN	
6	18	16	12	0.09
8	30	18	12	1.15
10	42	20	12	0.24
12	50	24	16	0.42
16	60	36	24	1.12

NOTES:
1. 2500 psi CONCRETE TO BE USED
2. BLOCK DIMENSIONS ARE BASED UPON SOIL BEARING PRESSURE OF 2000 psi AND WATER PRESSURE OF 150 psi. WHERE SOIL BEARING IS LESS OR WATER PRESSURE IS GREATER, A SPECIAL DESIGN WILL BE REQUIRED.

AQUARION Water Company
Stewards of the Environment

TEES

THRUST BLOCKS AT TEES, CAPS, PLUGS, AND VALVES (2)
NOT TO SCALE

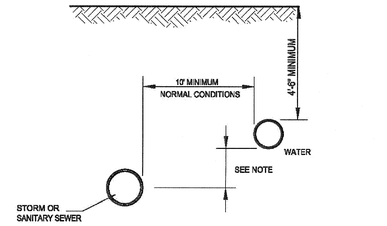

NOTE:
WHERE A 10' HORIZONTAL SEPARATION CANNOT BE OBTAINED DUE TO FIELD CONDITIONS, THE VERTICAL CLEAR DISTANCE SHALL BE A MINIMUM OF 18" HOWEVER, AN EXCEPTION TO THE 10' MINIMUM HORIZONTAL SEPARATION REQUIRES SEPARATE APPROVAL OF THE APPROPRIATE COUNTY HEALTH DEPT.

SEPARATION OF WATER MAINS AND SEWERS - PARALLEL INSTALLATION

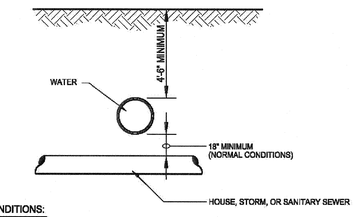

UNUSUAL CONDITIONS:
WATER MAINS PASSING UNDER SEWERS SHALL HAVE A VERTICAL CLEARANCE OF 18" MIN. BETWEEN THE SEWER AND WATER MAIN AND THE SEWER SHALL BE SUPPORTED AS DIRECTED BY THE OWNERS REPRESENTATIVE. TO THE EXTENT FEASIBLE, JOINTS IN THE WATER MAIN SHALL BE KEPT AS FAR AS POSSIBLE FROM THE SEWER. WHERE AN 18" SEPARATION CANNOT BE OBTAINED DUE TO FIELD CONDITIONS, SEPARATE APPROVAL OF THE HEALTH DEPARTMENT SHALL BE REQUIRED.

AQUARION Water Company
Stewards of the Environment

PIPE INSTALLATION SEPARATION OF WATER/SEWER CROSSING (3)
NOT TO SCALE

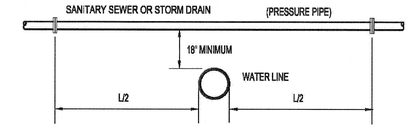

NOTE:
WHERE WATER LINE PASSES BENEATH SEWER LINE OR STORM DRAIN, THE JOINTS OF THE PIPE SHALL BE A MIN. OF 10' FROM THE POINT OF CROSSING.

CROSSING OF WATER LINE UNDER SANITARY SEWER OR STORM DRAIN

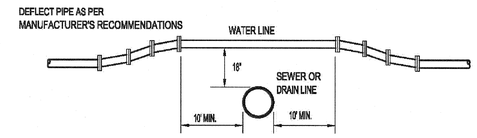

NOTE:
FOR ANY CONDITIONS OTHER THAN SHOWN ABOVE THE FOLLOWING REQUIREMENTS SHALL BE MET. THE JOINTS OF THE SANITARY SEWER OR STORM DRAIN SHALL BE A MINIMUM OF 10' FROM THE POINT OF CROSSING.

AQUARION Water Company
Stewards of the Environment

PIPE INSTALLATION CROSSING SANITARY/STORM SEWER (4)
NOT TO SCALE

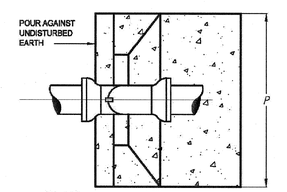

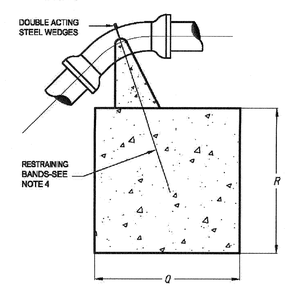

ELEVATION

PIPE DIAM. IN	BLOCK DIMENSIONS				CONCRETE VOLUME CU. YD.
	BEND	P IN.	Q IN.	R IN.	
16	45	72	60	56	5.2
	22 1/2	60	48	44	2.7
	11 1/4	60	36	36	1.7
12	45	60	48	48	3.0
	22 1/2	42	42	40	1.5
	11 1/4	34	34	34	0.84
10	45	54	42	42	2.0
	22 1/2	36	36	36	1.0
	11 1/4	30	30	30	0.58
8	45	48	36	36	1.3
	22 1/2	32	32	32	0.71
	11 1/4	26	26	26	0.38
6	45	42	30	28	0.76
	22 1/2	26	26	26	0.38
	11 1/4	24	24	24	0.30

NOTES:
1. 2500 psi CONCRETE TO BE USED
2. BLOCK DIMENSIONS ARE BASED UPON SOIL BEARING PRESSURE OF 2000 psi AND WATER PRESSURE OF 150 psi. WHERE SOIL BEARING IS LESS OR WATER PRESSURE IS GREATER, A SPECIAL DESIGN WILL BE REQUIRED.
3. WHERE 90° CREST VERTICAL BEND IS REQUIRED APPROVAL MUST FIRST BE OBTAINED FROM THE ENGINEER. A SPECIAL DESIGN WILL BE REQUIRED.
4. 2 - # 6 REINFORCING RODS REQUIRED FOR 16" 45° BEND; 1 - # 6 REINFORCING ROD REQUIRED FOR ALL OTHER BENDS. EXPOSED BARS TO BE PROVIDED WITH PROTECTIVE COATING.

NOTE:
IN ADDITION TO THE CONCRETE THRUST BLOCKS, ALL FITTINGS TO BE TIED TOGETHER WITH 3/4" GALVANIZED THREADED RODS. AND ANY OTHER SPECIALS AS DIRECTED BY THE WATER COMPANY.

AQUARION Water Company
Stewards of the Environment

THRUST BLOCKS AT CREST VERTICAL BENDS (5)
NOT TO SCALE

11/2/17
COMMONWEALTH OF MASSACHUSETTS
TIMOTHY J. WILLIAMS
CIVIL
No. 43119
REGISTERED PROFESSIONAL ENGINEER

PROFESSIONAL ENGINEER FOR
ALLEN & MAJOR ASSOCIATES, INC.

CUBE 3
architecture interiors planning
360 Merrimack Street Lawrence MA 01843
phone: 978.989.9900 www.cube3studio.com

project information:
BROADSTONE BARE COVE
HINGHAM
230 BEAL ST.
HINGHAM, MA

client information:
Broadstone Bare Cove Alliance, LLC.

C/O Alliance Residential Company
184 High Street Suite
401 Boston, MA 02110

consultant information:
Prepared by:
ALLEN & MAJOR ASSOCIATES, INC.
civil & structural engineering • land surveying
environmental consultings landscape architecture
www.allenmajor.com
100 COMMERCE WAY
WOBURN, MA 01801
TEL: (781) 935-8889
FAX: (781) 935-2896
WOBURN, MA • LAKEVILLE, MA • MANCHESTER, NH

issuance:
COMPREHENSIVE PERMIT APPLICATION PLANS
NOT FOR CONSTRUCTION

key plan:

drawing information:

drawing by:	SJL
drawing checked by:	CMQ
drawing scale:	1"=40'
drawing date:	12 AUGUST 2017
project number:	2118-02

drawing revisions:

No.	Description	Date
1	Issued for ZBA Resubmittal	10/25/16
2	Issued for ZBA Resubmittal	11/02/16
3	Issued for ZBA Resubmittal	01/04/17
4	Issued for ZBA Resubmittal	01/19/17
5	Issued for ZBA Resubmittal	02/14/17
6	Issued for ZBA Resubmittal	03/29/17
7	Issued for ZBA Resubmittal	04/11/17
8	Modifications to Project Plans	11/02/17

registration:

drawing name:
DETAILS

drawing number:
D-6

N:\PROJECTS\2118-02\CIVIL\DRAWINGS\CURRENT\C-2118-02 - DETAILS.DWG

COPYRIGHT (C) 2017 CUBE 3 STUDIO LLC, ALL RIGHTS RESERVED

NOTES:

1. MINIMUM BURIAL DEPTH (FINISH GRADE TO TOP OF PIPE)
   GRAVITY PIPE (SEWER & DRAIN) – SEE PLAN OR PROFILE
   PRESSURE PIPE UNDER PAVING – 4'
   PRESSURE PIPE BENEATH UNPAVED – 3'
   WATER PIPE – 5'
2. WHERE BACKFILL IS DESIGNATED AS COMPACTED, THIS MEANS 90 TO 95% STANDARD PROCTOR. AASHTO T–99. ALL FILL PLACED BELOW PIPES AND STRUCTURES MUST MEET THIS REQUIREMENT.
3. TRENCHES WITHIN PUBLIC RIGHT OF WAY MAY REQUIRE FLOWABLE FILL. VERIFY WITH MUNICIPAL ENGINEER.
4. WHERE WASTE FILLS ARE ENCOUNTERED AT SUBGRADE LEVEL FOR NEW UTILITIES, THE FILL SHOULD BE OVER–EXCAVATE, THE SUBGRADE SHOULD BE RE–COMPACTED, AND BACKFILL CONSISTING OF PIPE BEDDING MATERIAL, CRUSHED STONE OR OTHER SUITABLE GRANULAR FILL SHOULD BE PLACED TO A SUFFICIENT DEPTH TO CREATE A FIRM AND STABLE SUBGRADE (TYPICALLY 12 TO 18 INCHES OVER–EXCAVATION).
5. REFER TO PAVING, CURBS, WALKS AND DRIVEWAY DETAILS.
6. REFER TO LANDSCAPING DETAILS.

FILTER FABRIC USE

	SOIL TYPE	
	SILT OR CLAY	GRANULAR SOIL
ABOVE GROUND WATER	FILTER FABRIC NOT REQUIRED	FILTER FABRIC NOT REQUIRED
BELOW GROUND WATER	FILTER FABRIC REQUIRED	FILTER FABRIC NOT REQUIRED

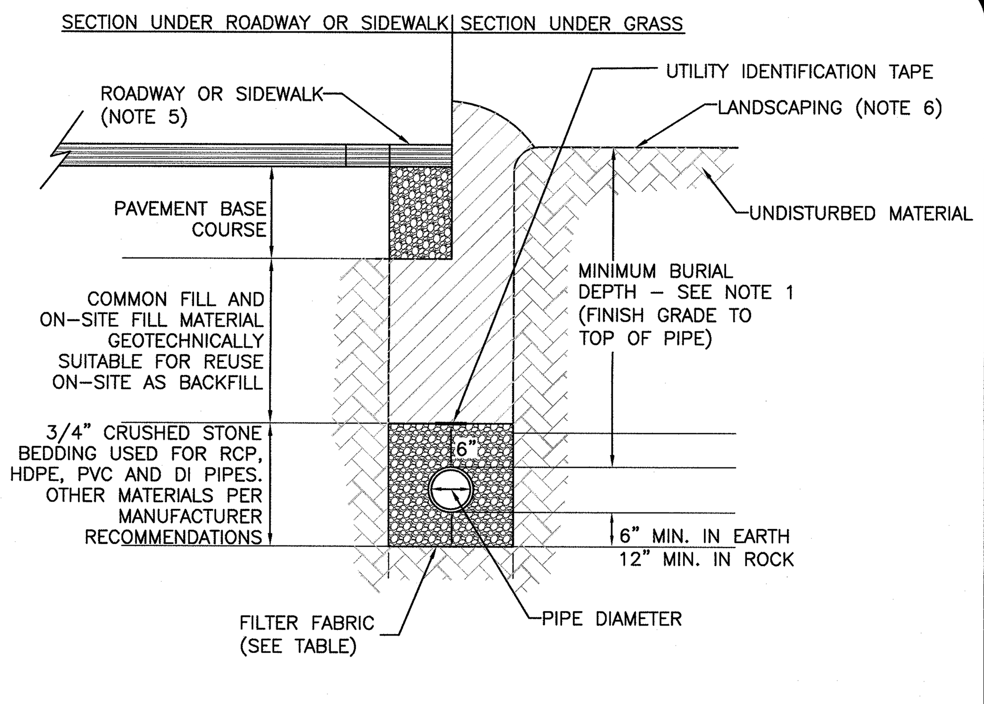

UTILITY TRENCH DETAIL
NOT TO SCALE
1

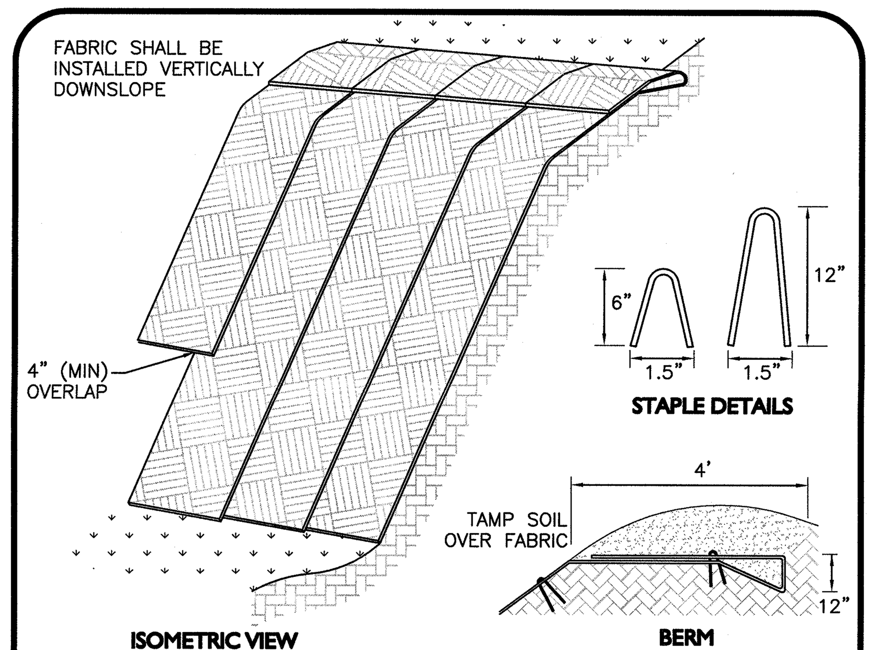

NOTE:
1. SLOPE SURFACE SHALL BE FREE OF ROCKS, CLODS, STICKS AND GRASS. FABRIC SHALL HAVE GOOD SOIL CONTACT.
2. APPLY PERMANENT SEEDING BEFORE PLACING FABRIC.
3. LAY BLANKETS LOOSELY AND STAKE OR STAPLE TO MAINTAIN DIRECT CONTACT WITH THE SOIL. DO NOT STRETCH.
4. CHOOSE MATERIAL BASED ON SLOPE, SOILS, AND APPLICATION.

EROSION CONTROL FABRIC
N.T.S.
2

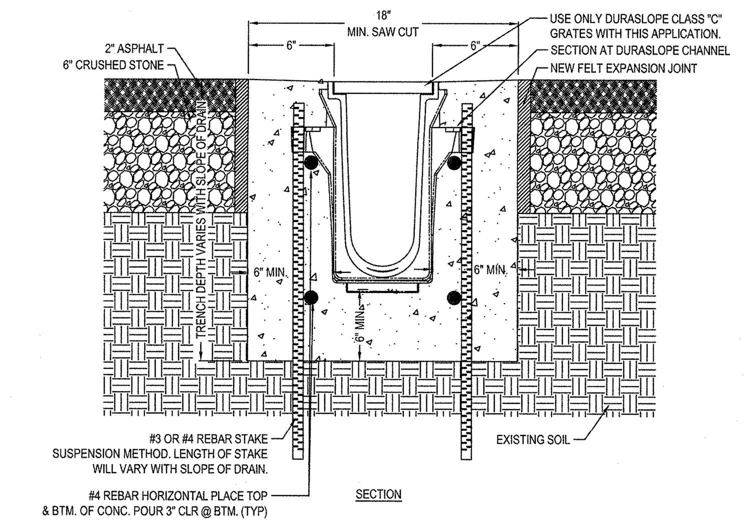
NDS WE PUT WATER IN ITS PLACE

NDS, INC.
851 NORTH HARVARD AVE.
LINDSAY, CA 93247
TOLL FREE: 1-800-726-1994
PHONE: (559) 562-9888
FAX: (559) 562-4488
www.ndspro.com

NOTES:
1. CHANNELS TO BE INSTALLED WITH BLANK GRATE. GRATE TO BE PROTECTED FROM CONCRETE POUR (COVER HOLES WITH TAPE).
2. INSTALLATION TO BE COMPLETED IN ACCORDANCE WITH MANUFACTURER'S SPECIFICATIONS.
3. DO NOT SCALE DRAWING.
4. THIS DRAWING IS INTENDED FOR USE BY ARCHITECTS, ENGINEERS, CONTRACTORS, CONSULTANTS AND DESIGN PROFESSIONALS FOR PLANNING PURPOSES ONLY.
5. ALL INFORMATION CONTAINED HEREIN WAS CURRENT AT THE TIME OF DEVELOPMENT BUT MUST BE REVIEWED AND APPROVED BY THE PRODUCT MANUFACTURER TO BE CONSIDERED ACCURATE.

DURA SLOPE TRENCH DRAIN SYSTEM
DURA SLOPE INSTALLATION DETAIL - CLASS 'C' 6' ENCASEMENT, REBAR SUSPENSION W/ ASPHALT

REVISION DATE 3-5-2015

NOTE:
1. THE CONTRACTOR SHALL SUBMIT A SHOP DRAWING OF THE DURA–SLOPE TRENCH SYSTEM, OR APPROVED EQUAL, TO A&M FOR REVIEW PRIOR TO INSTALLATION IN THE FIELD.

TRENCH DRAIN
N.T.S.
3

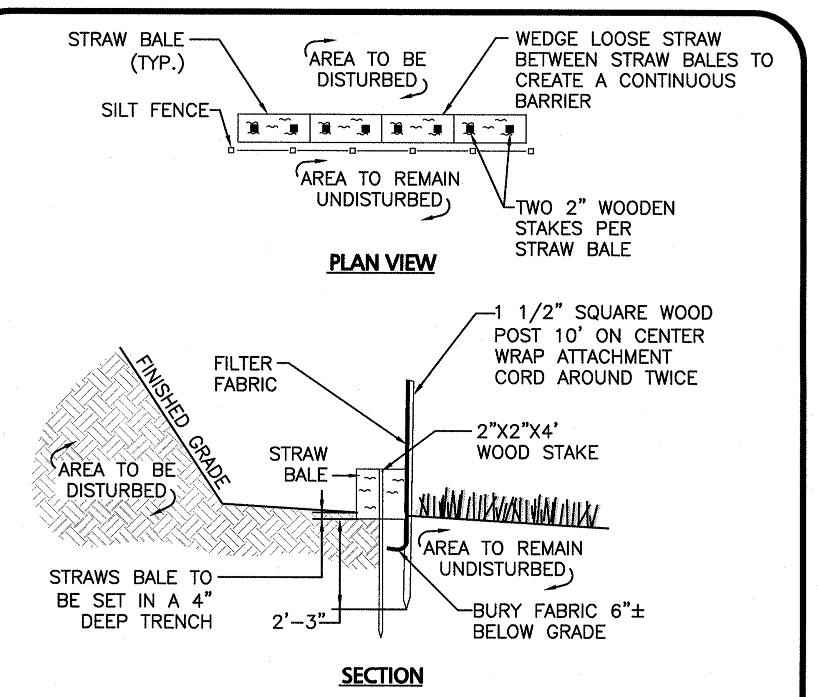

NOTE:
DEPTH TO BE 2' UNLESS POST IS TO BE SET IN PEAT THEN 3' OR DEPTH POSSIBLE BY PUSHING BY HAND SHALL BE REQUIRED.

SILT FENCE AND STRAW BALE DETAIL
NOT TO SCALE
4

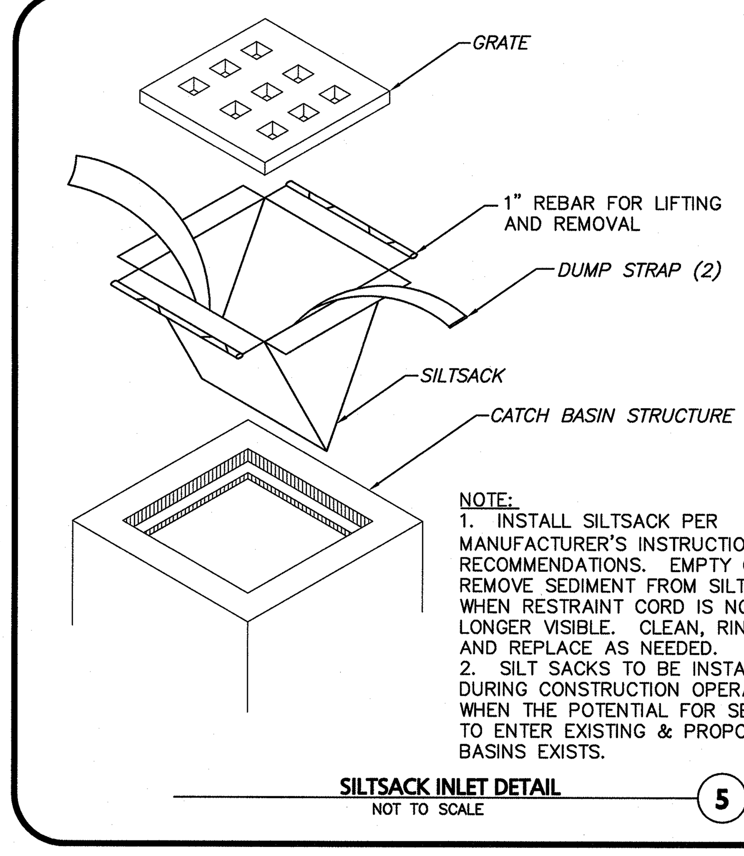

NOTE:
1. INSTALL SILTSACK PER MANUFACTURER'S INSTRUCTIONS AND RECOMMENDATIONS. EMPTY OR REMOVE SEDIMENT FROM SILTSACK WHEN RESTRAINT CORD IS NO LONGER VISIBLE. CLEAN, RINSE, AND REPLACE AS NEEDED.
2. SILT SACKS TO BE INSTALLED DURING CONSTRUCTION OPERATIONS WHEN THE POTENTIAL FOR SEDIMENT TO ENTER EXISTING & PROPOSED BASINS EXISTS.

SILTSACK INLET DETAIL
NOT TO SCALE
5

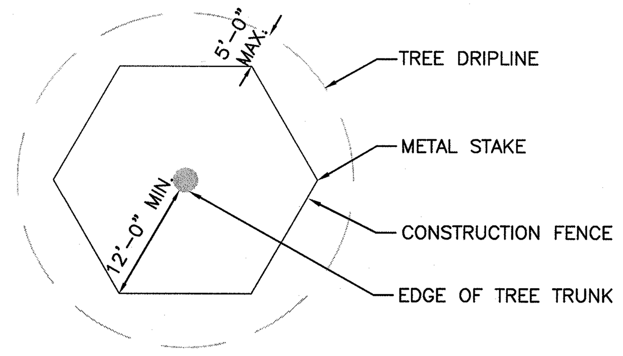

NOTE:
1. CONSTRUCTION FENCE TO BE "VISUAL BARRIER FENCE" AS MANUFACTURED BY EXXON CHEMICAL COMPANY ATLANTA, GA; "KONTROL SAFETY FENCE" AS MANUFACTURED BY MIRAFI, CHARLOTTE, N.C. OR APPROVED EQUAL.
2. IF GROUPS OF TREES ARE TO BE PROTECTED, EXTEND FENCE AROUND PERIMETER TO CONFORM TO MINIMUM DIMENSIONS FOR TREE TRUNKS AND DRIPLINE.

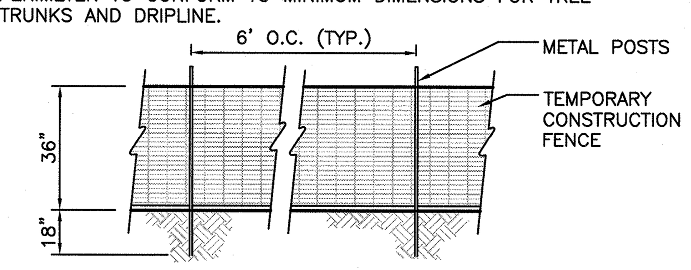

TEMP. CONST. FENCE / TREE PROTECTION
NOT TO SCALE
6

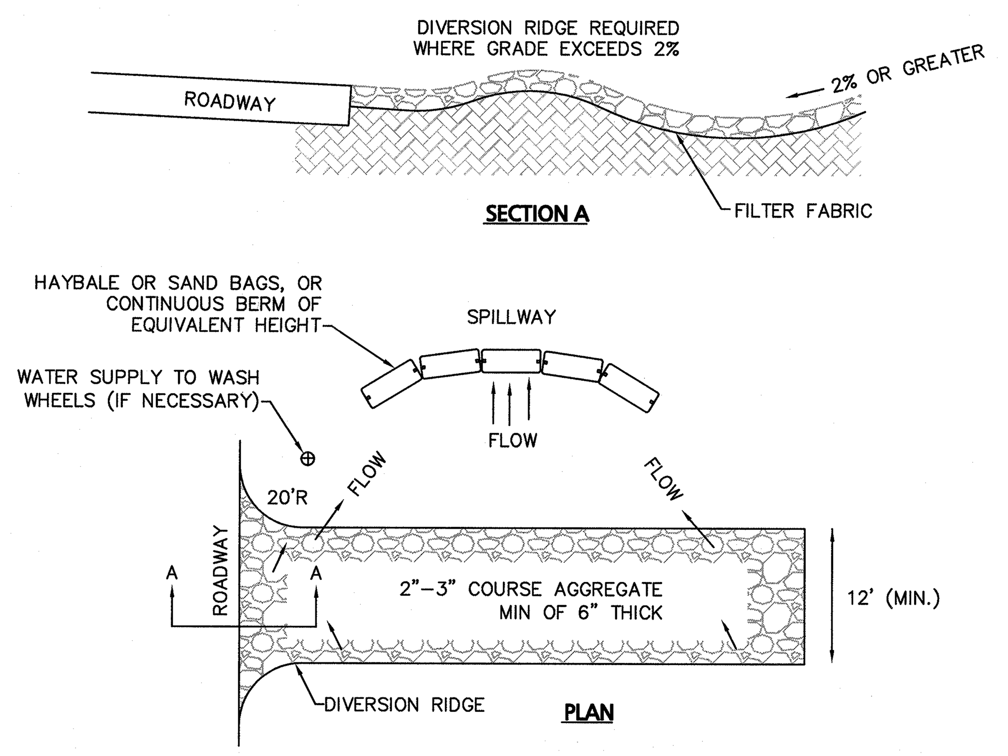

NOTES:
1. THE ENTRANCE SHALL BE MAINTAINED IN A CONDITION THAT WILL PREVENT TRACKING OR FLOWING OF SEDIMENT ONTO PUBLIC RIGHT–OF–WAYS. THIS MAY REQUIRE TOP DRESSING, REPAIR AND/OR CLEANOUT OF ANY MEASURES USED TO TRAP SEDIMENT.
2. WHEN NECESSARY, WHEELS SHALL BE CLEANED PRIOR TO ENTERING THE PUBLIC RIGHT–OF–WAY.
3. WHEN WASHING IS REQUIRED, IT SHALL BE DONE ON AN AREA STABILIZED WITH CRUSHED STONE THAT DRAINS INTO AN APPROVED SEDIMENT TRAP OR SEDIMENT BASIN.
4. USE SANDBAGS, HAYBALES, OR OTHER APPROVED METHODS TO CHANNELIZE RUNOFF TO BASIN AS REQUIRED.

TEMPORARY CONSTRUCTION ENTRANCE/EXIT
NOT TO SCALE
7

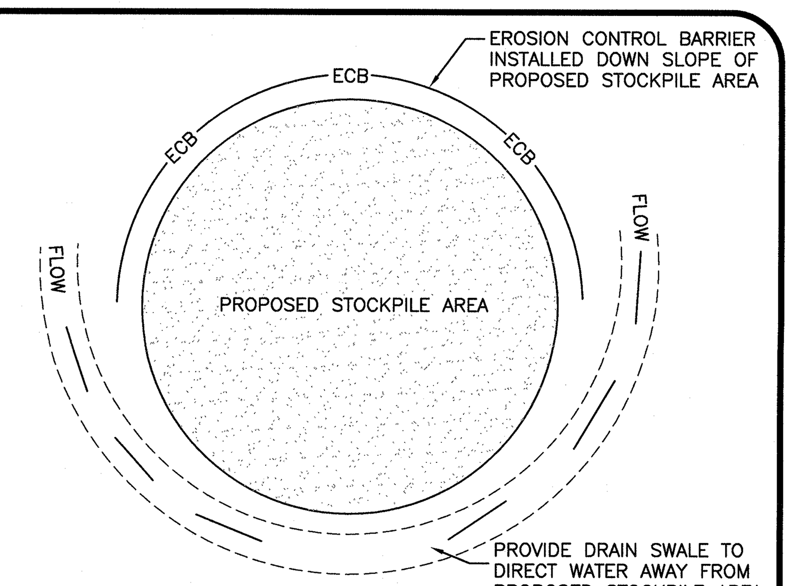

NOTES:
1. SOIL AND FILL STOCKPILES EXPECTED TO REMAIN IN PLACE FOR LESS THAN 90 DAYS SHALL BE COVERED WITH STRAW AND MULCH (AT 100LBS/1,000 SF), OR WITH AN ANCHORED TARP WITHIN 7 DAYS OR PRIOR TO ANY RAINFALL.
2. SOIL AND FILL STOCKPILES EXPECTED TO REMAIN IN PLACE FOR 90 DAYS OR MORE SHALL BE SEEDED WITH WINTER RYE (FOR FALL SEEDING AT 1LB/1,000 SF) OR OATS (FOR SUMMER SEEDING AT 2LB/1,000 SF) AND THEN COVERED WITH HAY MULCH (AT 100LB/1,000 SF) OR AN ANCHORED TARP WITHIN 7 DAYS OR PRIOR TO ANY RAINFALL.

STOCKPILE PROTECTION
NOT TO SCALE
8

NOTES:
1. HINGE MECHANISM TO BE PROVIDED.
2. TRASH RACK SHALL BE HOT–DIP GALVANIZED AFTER FABRICATION.
3. ALL MATERIALS TO BE NON–CORROSIVE.
4. SMALL CONCRETE PAD TO BE INSTALLED UNDERNEATH ORIFICE.

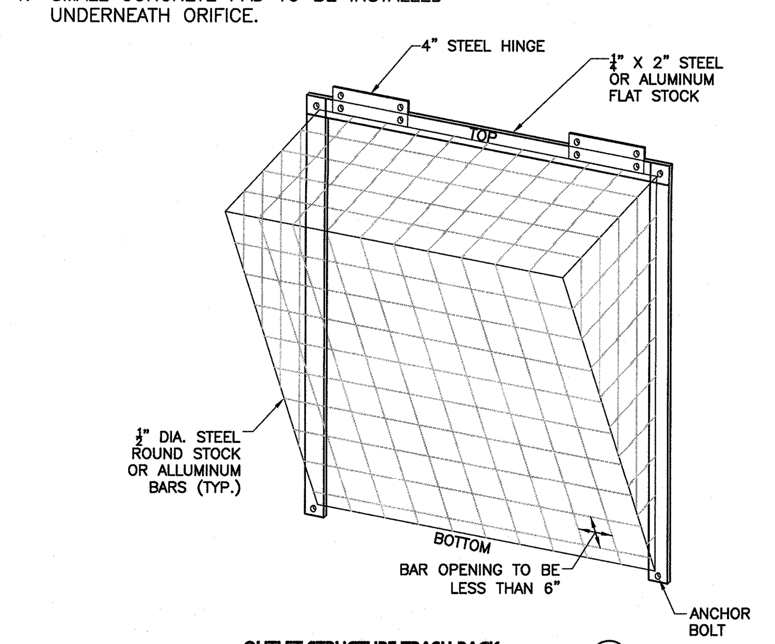

OUTLET STRUCTURE TRASH RACK
NOT TO SCALE
9

COMMONWEALTH OF MASSACHUSETTS
TIMOTHY J. WILLIAMS CIVIL No.43119
REGISTERED PROFESSIONAL ENGINEER
11/2/17

PROFESSIONAL ENGINEER FOR
ALLEN & MAJOR ASSOCIATES, INC.

CUBE 3
architecture interiors planning
360 Merrimack Street Lawrence MA 01843
phone: 978.989.9900 www.cube3studio.com

project information:
BROADSTONE
BARE COVE
HINGHAM
230 BEAL ST.
HINGHAM, MA

client information:
Broadstone Bare Cove Alliance, LLC.

C/O Alliance
Residential Company
184 High Street Suite
401 Boston, MA 02110

consultant information:
PREPARED BY:
ALLEN & MAJOR ASSOCIATES, INC.
civil & structural engineering ◆ land surveying
environmental consulting ◆ landscape architecture
www.allenmajor.com
100 COMMERCE WAY
WOBURN MA 01801
TEL: (781) 935-6889
FAX: (781) 935-2896
WOBURN, MA ◆ LAKEVILLE, MA ◆ MANCHESTER, NH

issuance:
COMPREHENSIVE PERMIT APPLICATION PLANS
NOT FOR CONSTRUCTION

key plan:

drawing information:

drawing by:	SJL
drawing checked by:	CMQ
drawing scale:	1"=40'
drawing date:	12 AUGUST 2017
project number:	2118-02

drawing revisions:

No.	Description	Date
1	Issued for ZBA Resubmittal	10/25/16
2	Issued for ZBA Resubmittal	11/02/16
3	Issued for ZBA Resubmittal	01/04/17
4	Issued for ZBA Resubmittal	01/19/17
5	Issued for ZBA Resubmittal	02/14/17
6	Issued for ZBA Resubmittal	03/29/17
7	Issued for ZBA Resubmittal	04/11/17
8	Modifications to Project Plans	11/02/17

registration:

drawing name:
DETAILS

drawing number:
D-7

N:\PROJECTS\2118–02\CIVIL\DRAWINGS\CURRENT\C–2118–02 – DETAILS.DWG

COPYRIGHT (C) 2017 CUBE 3 STUDIO LLC, ALL RIGHTS RESERVED

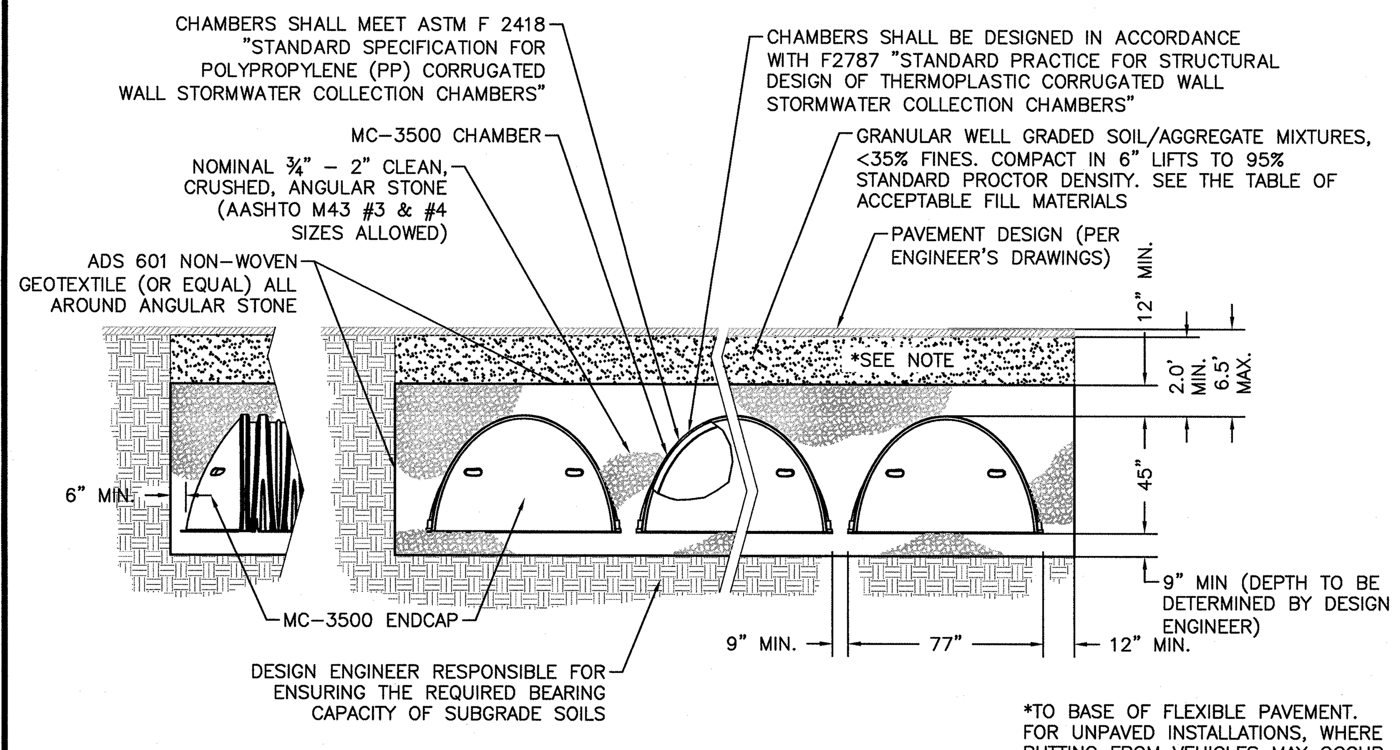

*TO BASE OF FLEXIBLE PAVEMENT. FOR UNPAVED INSTALLATIONS, WHERE RUTTING FROM VEHICLES MAY OCCUR, INCREASE COVER TO 30".

NOTES:

1. PERIMETER STONE MUST ALWAYS BE BROUGHT UP EVENLY WITH BACKFILL OF BED.
2. PERIMETER STONE MUST EXTEND HORIZONTALLY TO THE EXCAVATION WALL FOR BOTH STRAIGHT OR SLOPED SIDEWALLS.
3. THE INSTALLED CHAMBER SYSTEM SHALL PROVIDE THE LOAD FACTORS SPECIFIED IN THE AASHTO LRFD BRIDGE DESIGN SPECIFICATIONS SECTION 12.12 FOR EARTH AND LIVE LOADS, WITH CONSIDERATION FOR IMPACT AND MULTIPLE VEHICLE PRESENCES.

NOTE:
1. THE CONTRACTOR SHALL SUBMIT A SHOP DRAWING OF THE STORMTECH INFILTRATION CHAMBERS, OR APPROVED EQUAL, TO A&M FOR REVIEW PRIOR TO INSTALLATION IN THE FIELD.

StormTech®
Detention· Retention· Water Quality

70 INWOOD ROAD, SUITE 3 | ROCKY HILL | CT | 06067
860-529-8188 | 888-892-2694 | WWW.STORMTECH.COM

STORMTECH MC-3500 TYPICAL CROSS-SECTION (1)
NOT TO SCALE

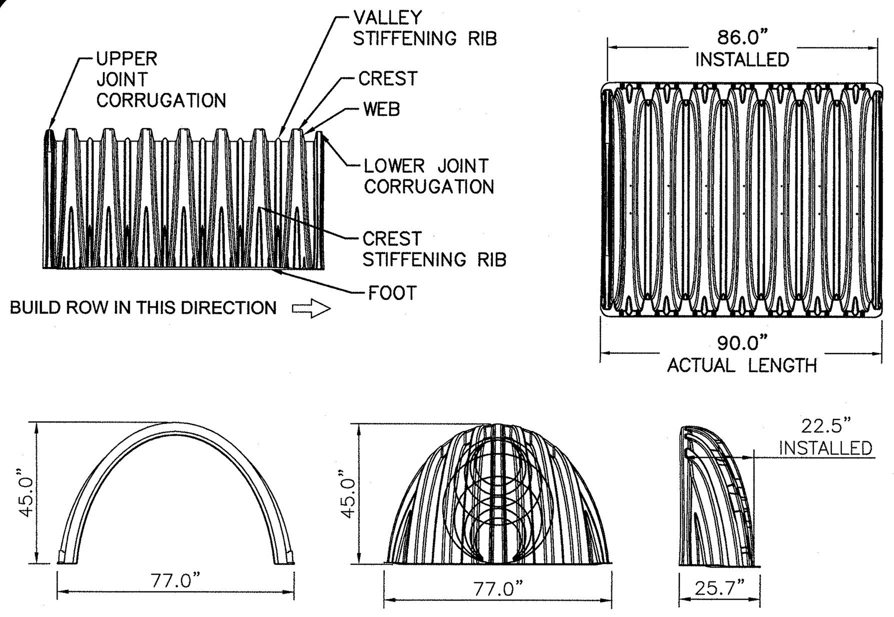

NOMINAL CHAMBER SPECIFICATIONS

SIZE (W X H X INSTALLED LENGTH)	77.0" X 45.0" X 86.0"
CHAMBER STORAGE	109.9 CUBIC FEET
MINIMUM INSTALLED STORAGE*	178.9 CUBIC FEET
WEIGHT	135.0 lbs.

NOMINAL END CAP SPECIFICATIONS

SIZE (W X H X INSTALLED LENGTH)	77.0" X 45.0" X 22.5"
END CAP STORAGE	14.9 CUBIC FEET
MINIMUM INSTALLED STORAGE*	46.0 CUBIC FEET
WEIGHT	50.0 lbs.

*ASSUMES 12" STONE ABOVE, 9" STONE FOUNDATION AND BETWEEN CHAMBERS, 12" STONE PERIMETER IN FRONT OF END CAPS AND 40% STONE POROSITY

STUBS AT BOTTOM OF END CAP FOR PART NUMBERS ENDING WITH "B"
STUBS AT TOP OF END CAP FOR PART NUMBERS ENDING WITH "T"

PART #	STUB	B	C
MC3500IEPP06T	6" (150 mm)	33.21" (844 mm)	---
MC3500IEPP06B		---	0.66" (17 mm)
MC3500IEPP08T	8" (200 mm)	31.16" (791 mm)	---
MC3500IEPP08B		---	0.81" (21 mm)
MC3500IEPP10T	10" (250 mm)	29.04" (738 mm)	---
MC3500IEPP10B		---	0.93" (24 mm)
MC3500IEPP12T	12" (300 mm)	26.36" (670 mm)	---
MC3500IEPP12B		---	1.35" (34 mm)
MC3500IEPP15T	15" (375 mm)	23.39" (594 mm)	---
MC3500IEPP15B		---	1.50" (38 mm)
MC3500IEPP18TC	18" (450 mm)	20.03" (509 mm)	---
MC3500IEPP18BC		---	1.77" (45 mm)
MC3500IEPP24TC	24" (600 mm)	14.48" (368 mm)	---
MC3500IEPP24BC		---	2.06" (52 mm)
MC3500IEPP30BC	30" (750 mm)	---	

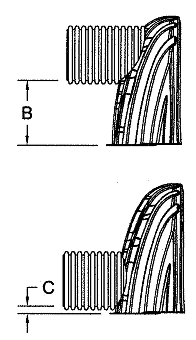

NOTE: ALL DIMENSIONS ARE NOMINAL

1) CUSTOM PRE-CORED INVERTS ARE AVAILABLE UPON REQUEST. INVENTORIED MANIFOLDS INCLUDE 12-24" SIZE ON SIZE AND 15-48" ECCENTRIC MANIFOLDS.
2) CUSTOM INVERT LOCATIONS ON THE MC-3500 END CAP CUT IN THE FIELD ARE NOT RECOMMENDED FOR PIPE SIZES GREATER THAN 10". THE INVERT LOCATION IN COLUMN 'B' ARE THE HIGHEST POSSIBLE FOR THE PIPE SIZE.

MC-3500 TECHNICAL SPECIFICATION (2)
NOT TO SCALE

1. STORMTECH LLC ("STORMTECH") REQUIRES INSTALLING CONTRACTORS TO USE AND UNDERSTAND STORMTECH'S LATEST INSTALLATION INSTRUCTIONS PRIOR TO BEGINNING SYSTEM INSTALLATION.
2. OUR TECHNICAL SERVICES DEPARTMENT OFFERS INSTALLATION CONSULTATIONS TO INSTALLING CONTRACTORS. CONTACT OUR TECHNICAL SERVICES REPRESENTATIVE AT LEAST 30 DAYS PRIOR TO SYSTEM INSTALLATION TO ARRANGE A PRE-INSTALLATION CONSULTATION. OUR REPRESENTATIVES CAN THEN ANSWER QUESTIONS OR ADDRESS COMMENTS ON THE STORMTECH CHAMBER SYSTEM AND INFORM THE INSTALLING CONTRACTOR OF THE MINIMUM INSTALLATION REQUIREMENTS BEFORE BEGINNING THE SYSTEM'S CONSTRUCTION. CALL 1-888-892-2694 TO SPEAK TO A TECHNICAL SERVICE REPRESENTATIVE OR VISIT WWW.STORMTECH.COM TO RECEIVE A COPY OF OUR INSTALLATION INSTRUCTIONS.
3. STORMTECH'S REQUIREMENTS FOR SYSTEMS WITH PAVEMENT DESIGN (ASPHALT, CONCRETE PAVERS, ETC.): MINIMUM COVER IS 18 INCHES NOT INCLUDING PAVEMENT; MAXIMUM COVER IS 96 INCHES INCLUDING PAVEMENT. FOR INSTALLATIONS THAT DO NOT INCLUDE PAVEMENT, WHERE RUTTING FROM VEHICLES MAY OCCUR, MINIMUM REQUIRED COVER IS 24 INCHES, MAXIMUM COVER IS 96 INCHES.
4. THE CONTRACTOR MUST REPORT ANY DISCREPANCIES WITH CHAMBER FOUNDATION MATERIALS BEARING CAPACITIES TO THE DESIGN ENGINEER.
5. AASHTO M288 CLASS 2 NON-WOVEN GEOTEXTILE (FILTER FABRIC) MUST BE USED AS INDICATED IN THE PROJECT PLANS.
6. STONE PLACEMENT BETWEEN CHAMBERS ROWS AND AROUND PERIMETER MUST FOLLOW INSTRUCTIONS AS INDICATED IN THE MOST CURRENT VERSION OF STORMTECH'S INSTALLATION INSTRUCTIONS.
7. BACKFILLING OVER THE CHAMBERS MUST FOLLOW REQUIREMENTS AS INDICATED IN THE MOST CURRENT VERSION OF STORMTECH'S INSTALLATION INSTRUCTIONS.
8. THE CONTRACTOR MUST REFER TO STORMTECH'S INSTALLATION INSTRUCTIONS FOR A TABLE OF ACCEPTABLE VEHICLE LOADS AT VARIOUS DEPTHS OF COVER. THIS INFORMATION IS ALSO AVAILABLE AT STORMTECH'S WEBSITE: WWW.STORMTECH.COM. THE CONTRACTOR IS RESPONSIBLE FOR PREVENTING VEHICLES THAT EXCEED STORMTECH'S REQUIREMENTS FROM TRAVELING ACROSS OR PARKING OVER THE STORMWATER SYSTEM. TEMPORARY FENCING, WARNING TAPE AND APPROPRIATELY LOCATED SIGNS ARE COMMONLY USED TO PREVENT UNAUTHORIZED VEHICLES FROM ENTERING SENSITIVE CONSTRUCTION AREAS.
9. THE CONTRACTOR MUST APPLY EROSION AND SEDIMENT CONTROL MEASURES TO PROTECT THE STORMWATER SYSTEM DURING ALL PHASES OF SITE CONSTRUCTION PER LOCAL CODES AND DESIGN ENGINEER'S SPECIFICATIONS.
10. STORMTECH PRODUCT WARRANTY IS LIMITED. SEE CURRENT PRODUCT WARRANTY FOR DETAILS. TO ACQUIRE A COPY CALL STORMTECH AT 1-888-892-2694 OR VISIT WWW.STORMTECH.COM.

STORMTECH* GENERAL NOTES (3)
NOT TO SCALE

MATERIAL LOCATION		DESCRIPTION	AASHTO MATERIAL CLASSIFICATIONS	COMPACTION / DENSITY REQUIREMENT
D	**FINAL FILL:** FILL MATERIAL FOR LAYER 'D' STARTS FROM THE TOP OF THE 'C' LAYER TO THE BOTTOM OF FLEXIBLE PAVEMENT OR UNPAVED FINISHED GRADE ABOVE. NOTE THAT PAVEMENT SUB-BASE MAY BE PART OF THE 'D' LAYER	ANY SOIL/ROCK MATERIALS, NATIVE SOILS, OR PER ENGINEER'S PLANS. CHECK PLANS FOR PAVEMENT SUB-GRADE REQUIREMENTS.	N/A	PREPARE PER SITE DESIGN ENGINEER'S PLANS. PAVED INSTALLATIONS MAY HAVE STRINGENT MATERIAL AND PREPARATION REQUIREMENTS.
C	**INITIAL FILL:** FILL MATERIAL FOR LAYER 'C' STARTS FROM THE TOP OF THE EMBEDMENT STONE ('B' LAYER) TO 18" (450 mm) ABOVE THE TOP OF THE CHAMBER. NOTE THAT PAVEMENT SUB-BASE MAY BE A PART OF THE 'C' LAYER.	GRANULAR WELL-GRADED SOIL/AGGREGATE MIXTURES, <35% FINES OR PROCESSED AGGREGATE. MOST PAVEMENT SUB-BASE MATERIALS CAN BE USED IN LIEU OF THIS LAYER.	AASHTO M145[1] A-1, A-2-4, A-3 OR AASHTO M43[1] 3, 357, 4, 467, 5, 56, 57, 6, 67, 68, 7, 78, 8, 89, 9, 10	BEGIN COMPACTIONS AFTER 12" (300 mm) OF MATERIAL OVER THE CHAMBERS IS REACHED. COMPACT ADDITIONAL LAYERS IN 6" (150 mm) MAX LIFTS TO A MIN. 95% PROCTOR DENSITY FOR WELL GRADED MATERIAL AND 95% RELATIVE DENSITY FOR PROCESSED AGGREGATE MATERIALS. ROLLER GROSS VEHICLE WEIGHT NOT TO EXCEED 12,000 lbs (53 kN). DYNAMIC FORCE NOT TO EXCEED 20,000 lbs (89 kN).
B	**EMBEDMENT STONE:** FILL SURROUNDING THE CHAMBERS FROM THE FOUNDATION STONE ('A' LAYER) TO THE 'C' LAYER ABOVE.	CLEAN, CRUSHED, ANGULAR STONE, NOMINAL SIZE DISTRIBUTION BETWEEN 3/4-2 INCH (20-50 mm)	AASHTO M43[1] 3, 357, 4, 467, 5, 56, 57	NO COMPACTION REQUIRED.
A	**FOUNDATION STONE:** FILL BELOW CHAMBERS FROM THE SUB-GRADE UP TO THE FOOT (BOTTOM) OF THE CHAMBER.	CLEAN, CRUSHED, ANGULAR STONE, NOMINAL SIZE DISTRIBUTION BETWEEN 3/4-2 INCH (20-50 mm)	AASHTO M43[1] 3, 357, 4, 467, 5, 56, 57	PLATE COMPACT OR ROLL TO ACHIEVE A FLAT SURFACE. [2] [3]

PLEASE NOTE:
1. THE LISTED AASHTO DESIGNATIONS ARE FOR GRADATIONS ONLY. THE STONE MUST ALSO BE CLEAN, CRUSHED, ANGULAR. FOR EXAMPLE, A SPECIFICATION FOR #4 STONE WOULD STATE: "CLEAN, CRUSHED, ANGULAR NO. 4 (AASHTO M43) STONE".
2. STORMTECH COMPACTION REQUIREMENTS ARE MET FOR 'A' LOCATION MATERIALS WHEN PLACED AND COMPACTED IN 9" (230 mm) (MAX) LIFTS USING TWO FULL COVERAGES WITH A VIBRATORY COMPACTOR.
3. WHERE INFILTRATION SURFACES MAY BE COMPROMISED BY COMPACTION, FOR STANDARD DESIGN LOAD CONDITIONS, A FLAT SURFACE MAY BE ACHIEVED BY RAKING OR DRAGGING WITHOUT COMPACTION EQUIPMENT. FOR SPECIAL LOAD DESIGNS, CONTACT STORMTECH FOR COMPACTION REQUIREMENTS.

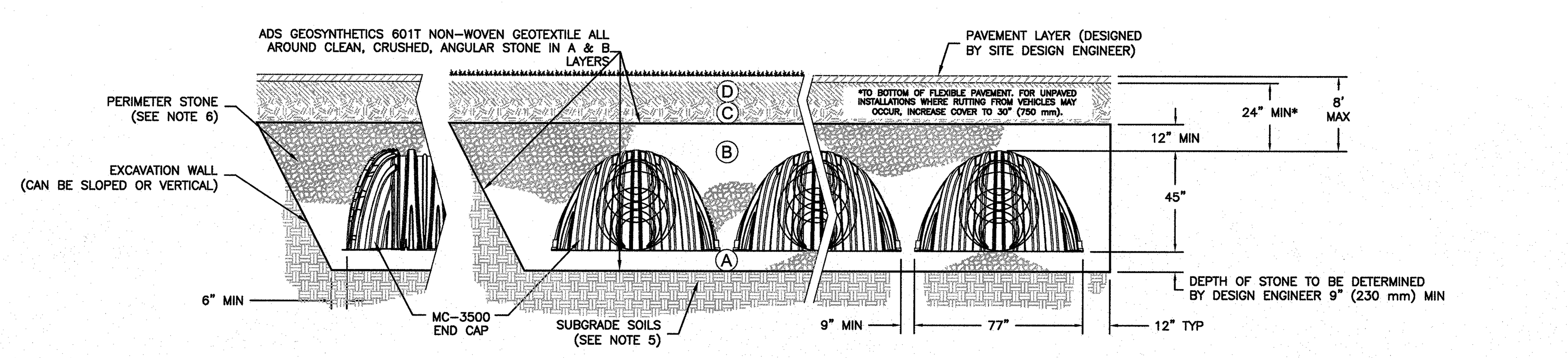

NOTES:

1. MC-3500 CHAMBERS SHALL CONFORM TO THE REQUIREMENTS OF ASTM F2418 "STANDARD SPECIFICATION FOR POLYPROPYLENE (PP) CORRUGATED WALL STORMWATER COLLECTION CHAMBERS".
2. MC-3500 CHAMBERS SHALL BE DESIGNED IN ACCORDANCE WITH ASTM F2787 "STANDARD PRACTICE FOR STRUCTURAL DESIGN OF THERMOPLASTIC CORRUGATED WALL STORMWATER COLLECTION CHAMBERS".
3. "ACCEPTABLE FILL MATERIALS" TABLE ABOVE PROVIDES MATERIAL LOCATIONS, DESCRIPTIONS, GRADATIONS, AND COMPACTION REQUIREMENTS FOR FOUNDATION, EMBEDMENT, AND FILL MATERIALS.
4. THE "SITE DESIGN ENGINEER" REFERS TO THE ENGINEER RESPONSIBLE FOR THE DESIGN AND LAYOUT OF THE STORMTECH CHAMBERS FOR THIS PROJECT.
5. THE SITE DESIGN ENGINEER IS RESPONSIBLE FOR ASSESSING THE BEARING RESISTANCE (ALLOWABLE BEARING CAPACITY) OF THE SUBGRADE SOILS AND THE DEPTH OF FOUNDATION STONE WITH CONSIDERATION FOR THE RANGE OF EXPECTED SOIL MOISTURE CONDITIONS.
6. PERIMETER STONE MUST BE EXTENDED HORIZONTALLY TO THE EXCAVATION WALL FOR BOTH VERTICAL AND SLOPED EXCAVATION WALLS.
7. ONCE LAYER 'C' IS PLACED, ANY SOIL/MATERIAL CAN BE PLACED IN LAYER 'D' UP TO THE FINISHED GRADE. MOST PAVEMENT SUBBASE SOILS CAN BE USED TO REPLACE THE MATERIAL REQUIREMENTS OF LAYER 'C' OR 'D' AT THE SITE DESIGN ENGINEER'S DISCRETION.

ACCEPTABLE FILL MATERIALS: STORMTECH MC-3500 CHAMBER SYSTEMS (4)
NOT TO SCALE

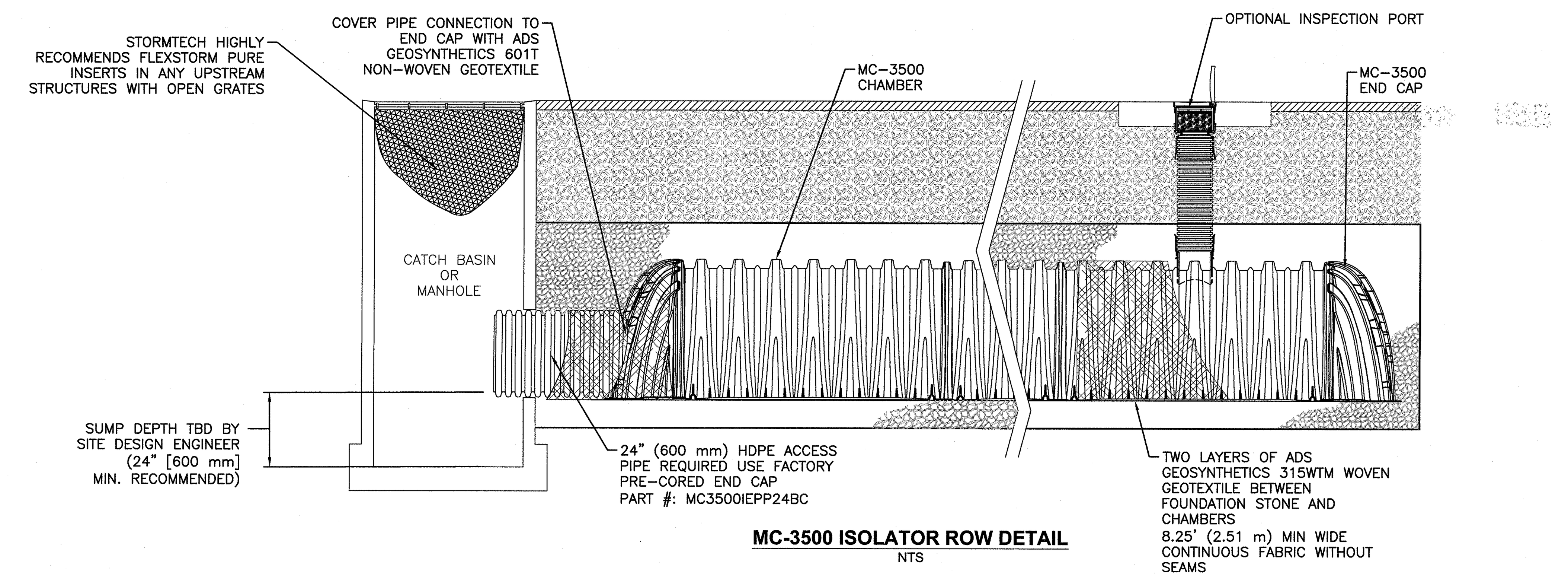

MC-3500 ISOLATOR ROW DETAIL
NTS

INSPECTION & MAINTENANCE

STEP 1) INSPECT ISOLATOR ROW FOR SEDIMENT
- A. INSPECTION PORTS (IF PRESENT)
  - A.1. REMOVE/OPEN LID ON NYLOPLAST INLINE DRAIN
  - A.2. REMOVE AND CLEAN FLEXSTORM FILTER IF INSTALLED
  - A.3. USING A FLASHLIGHT AND STADIA ROD, MEASURE DEPTH OF SEDIMENT AND RECORD ON MAINTENANCE LOG
  - A.4. LOWER A CAMERA INTO ISOLATOR ROW FOR VISUAL INSPECTION OF SEDIMENT LEVELS (OPTIONAL)
  - A.5. IF SEDIMENT IS AT, OR ABOVE, 3" (80 mm) PROCEED TO STEP 2. IF NOT, PROCEED TO STEP 3.
- B. ALL ISOLATOR ROWS
  - B.1. REMOVE COVER FROM STRUCTURE AT UPSTREAM END OF ISOLATOR ROW
  - B.2. USING A FLASHLIGHT, INSPECT DOWN THE ISOLATOR ROW THROUGH OUTLET PIPE
    - i) MIRRORS ON POLES OR CAMERAS MAY BE USED TO AVOID A CONFINED SPACE ENTRY
    - ii) FOLLOW OSHA REGULATIONS FOR CONFINED SPACE ENTRY IF ENTERING MANHOLE
  - B.3. IF SEDIMENT IS AT, OR ABOVE, 3" (80 mm) PROCEED TO STEP 2. IF NOT, PROCEED TO STEP 3.

STEP 2) CLEAN OUT ISOLATOR ROW USING THE JETVAC PROCESS
- A. A FIXED CULVERT CLEANING NOZZLE WITH REAR FACING SPREAD OF 45" (1.1 m) OR MORE IS PREFERRED
- B. APPLY MULTIPLE PASSES OF JETVAC UNTIL BACKFLUSH WATER IS CLEAN
- C. VACUUM STRUCTURE SUMP AS REQUIRED

STEP 3) REPLACE ALL COVERS, GRATES, FILTERS, AND LIDS; RECORD OBSERVATIONS AND ACTIONS.

STEP 4) INSPECT AND CLEAN BASINS AND MANHOLES UPSTREAM OF THE STORMTECH SYSTEM.

NOTES

1. INSPECT EVERY 6 MONTHS DURING THE FIRST YEAR OF OPERATION. ADJUST THE INSPECTION INTERVAL BASED ON PREVIOUS OBSERVATIONS OF SEDIMENT ACCUMULATION AND HIGH WATER ELEVATIONS.
2. CONDUCT JETTING AND VACTORING ANNUALLY OR WHEN INSPECTION SHOWS THAT MAINTENANCE IS NECESSARY.

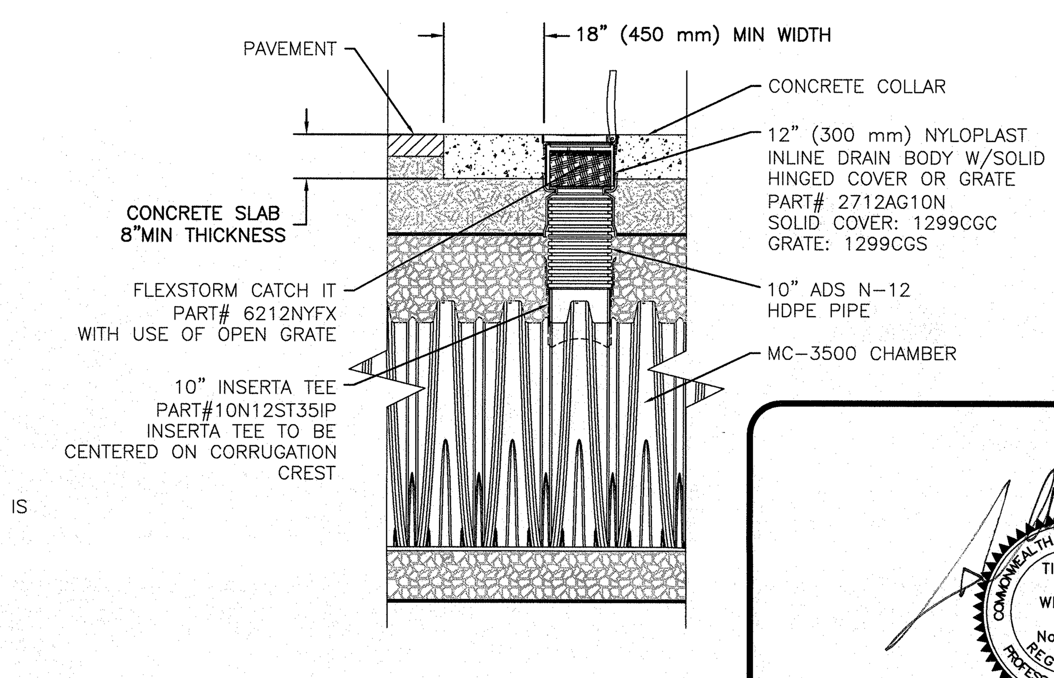

MC-3500 ISOLATOR ROW DETAIL (5)
NOT TO SCALE

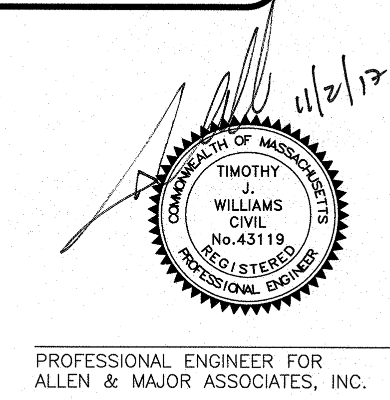

PROFESSIONAL ENGINEER FOR ALLEN & MAJOR ASSOCIATES, INC.

N:\PROJECTS\2118-02\CIVIL\DRAWINGS\CURRENT\C-2118-02 - DETAILS.DWG

CUBE 3
architecture interiors planning
360 Merrimack Street Lawrence MA 01843
phone: 978.989.9900 www.cube3studio.com

project information:
BROADSTONE BARE COVE HINGHAM
230 BEAL ST.
HINGHAM, MA

client information:
Broadstone Bare Cove Alliance, LLC.

C/O Alliance Residential Company
184 High Street Suite 401 Boston, MA 02110

consultant information:
PREPARED BY:
ALLEN & MAJOR ASSOCIATES, INC.
civil & structural engineering ♦ land surveying
environmental consulting ♦ landscape architecture
www.allenmajor.com
100 COMMERCE WAY
WOBURN MA 01801
TEL: (781) 935-6889
FAX: (781) 935-2896
WOBURN, MA ♦ LAKEVILLE, MA ♦ MANCHESTER, NH

issuance:
COMPREHENSIVE PERMIT APPLICATION PLANS
NOT FOR CONSTRUCTION

key plan:

drawing information:

drawing by:	SJL
drawing checked by:	CMQ
drawing scale:	1"=40'
drawing date:	12 AUGUST 2017
project number:	2118-02

drawing revisions:

No.	Description	Date
1	Issued for ZBA Resubmittal	10/25/16
2	Issued for ZBA Resubmittal	11/02/16
3	Issued for ZBA Resubmittal	01/04/17
4	Issued for ZBA Resubmittal	01/19/17
5	Issued for ZBA Resubmittal	02/14/17
6	Issued for ZBA Resubmittal	03/29/17
7	Issued for ZBA Resubmittal	04/11/17
8	Modifications to Project Plans	11/02/17

registration:

drawing name:
DETAILS

drawing number:
D-8

COPYRIGHT (C) 2017 CUBE 3 STUDIO LLC, ALL RIGHTS RESERVED

UIS#1 PROPOSED LAYOUT

(27) STORMTECH MC-3500 CHAMBERS
(6) STORMTECH MC-3500 END CAPS
INSTALLED WITH 12" COVER STONE,
9" BASE STONE, 40% STONE VOID
AREA OF SYSTEM: 1,586 FT²
PERIMETER OF SYSTEM: 185 FT

PROPOSED UIS#1 ELEVATIONS

FINISHED GRADE (TOP OF FLEXIBLE PAVEMENT):	23.00
TOP OF STONE:	20.25
TOP OF CHAMBER:	19.25
BOTTOM OF CHAMBER:	15.50
BOTTOM OF STONE:	14.75

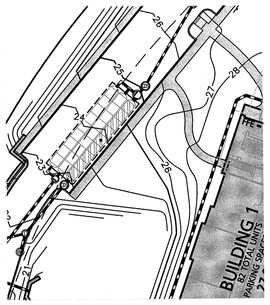

NOTE:
1. THE CONTRACTOR SHALL SUBMIT A SHOP DRAWING OF THE STORMTECH INFILTRATION CHAMBERS, OR APPROVED EQUAL, TO A&M FOR REVIEW PRIOR TO INSTALLATION IN THE FIELD.

UNDERGROUND INFILTRATION SYSTEM #1
STORMTECH MC-3500 CHAMBERS
NOT TO SCALE
(1)

UIS#2 PROPOSED LAYOUT

(78) STORMTECH MC-3500 CHAMBERS
(12) STORMTECH MC-3500 END CAPS
INSTALLED WITH 12" COVER STONE,
9" BASE STONE, 40% STONE VOID
AREA OF SYSTEM: 4,348 FT²
PERIMETER OF SYSTEM: 285 FT

PROPOSED UIS#2 ELEVATIONS

FINISHED GRADE (TOP OF FLEXIBLE PAVEMENT):	28.50
TOP OF STONE:	25.75
TOP OF CHAMBER:	24.75
BOTTOM OF CHAMBER:	21.00
BOTTOM OF STONE:	20.25

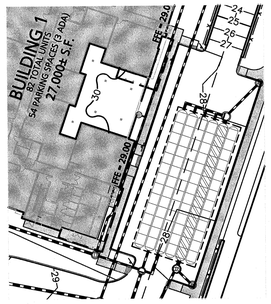

NOTE:
1. THE CONTRACTOR SHALL SUBMIT A SHOP DRAWING OF THE STORMTECH INFILTRATION CHAMBERS, OR APPROVED EQUAL, TO A&M FOR REVIEW PRIOR TO INSTALLATION IN THE FIELD.

UNDERGROUND INFILTRATION SYSTEM #2
STORMTECH MC-3500 CHAMBERS
NOT TO SCALE
(2)

UIS#3 PROPOSED LAYOUT

(18) STORMTECH MC-3500 CHAMBERS
(12) STORMTECH MC-3500 END CAPS
INSTALLED WITH 12" COVER STONE,
9" BASE STONE, 40% STONE VOID
AREA OF SYSTEM: 1,198 FT²
PERIMETER OF SYSTEM: 143 FT

PROPOSED UIS#3 ELEVATIONS

FINISHED GRADE (TOP OF FLEXIBLE PAVEMENT):	19.30
TOP OF STONE:	18.05
TOP OF CHAMBER:	17.05
BOTTOM OF CHAMBER:	13.30
BOTTOM OF STONE:	12.55

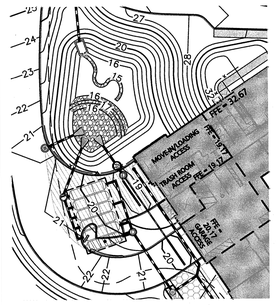

NOTE:
1. THE CONTRACTOR SHALL SUBMIT A SHOP DRAWING OF THE STORMTECH INFILTRATION CHAMBERS, OR APPROVED EQUAL, TO A&M FOR REVIEW PRIOR TO INSTALLATION IN THE FIELD.

UNDERGROUND INFILTRATION SYSTEM #3
STORMTECH MC-3500 CHAMBERS
NOT TO SCALE
(3)

UIS#4 PROPOSED LAYOUT

(8) STORMTECH MC-3500 CHAMBERS
(32) STORMTECH MC-3500 END CAPS
INSTALLED WITH 12" COVER STONE,
9" BASE STONE, 40% STONE VOID
AREA OF SYSTEM: 1,876 FT²
PERIMETER OF SYSTEM: 185 FT

PROPOSED UIS#4 ELEVATIONS

FINISHED GRADE (TOP OF FLEXIBLE PAVEMENT):	20.00
TOP OF STONE:	18.50
TOP OF CHAMBER:	17.50
BOTTOM OF CHAMBER:	13.75
BOTTOM OF STONE:	13.00

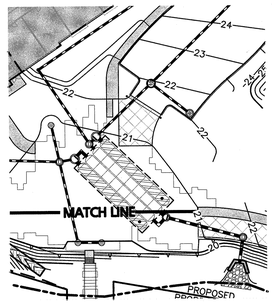

NOTE:
1. THE CONTRACTOR SHALL SUBMIT A SHOP DRAWING OF THE STORMTECH INFILTRATION CHAMBERS, OR APPROVED EQUAL, TO A&M FOR REVIEW PRIOR TO INSTALLATION IN THE FIELD.

UNDERGROUND INFILTRATION SYSTEM #4
STORMTECH MC-3500 CHAMBERS
NOT TO SCALE
(4)

FRAME AND COVER
DIAMETER VARIES (NTS)

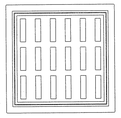

FRAME AND GRATE
DIAMETER VARIES (NTS)

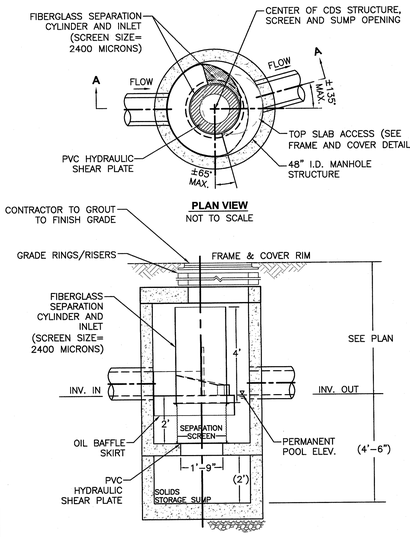

HIGH EFFICIENCY CDS2015-4-C
(OR APPROVED EQUAL)

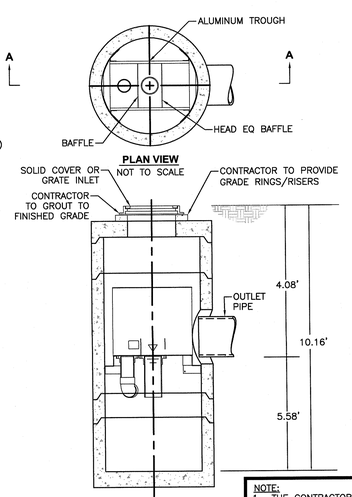

NOTE:
1. THE CONTRACTOR SHALL SUBMIT A SHOP DRAWING OF THE DURA-SLOPE TRENCH SYSTEM, OR APPROVED EQUAL, TO A&M FOR REVIEW PRIOR TO INSTALLATION IN THE FIELD.

PROPRIETARY SEPARATORS - VORTSENTRY HS36
CONTECH PROPRIETARY SEPARATORS
(5)

GENERAL NOTES
1. CONTECH TO PROVIDE ALL MATERIALS UNLESS NOTED OTHERWISE.
2. DIMENSIONS MARKED WITH ( ) ARE REFERENCE DIMENSIONS. ACTUAL DIMENSIONS MAY VARY.
3. FOR FABRICATION DRAWINGS WITH DETAILED STRUCTURE DIMENSIONS AND WEIGHTS, PLEASE CONTACT YOUR CONTECH CONSTRUCTION PRODUCTS REPRESENTATIVE. www.contech-cpi.com
4. CDS WATER QUALITY STRUCTURE SHALL BE IN ACCORDANCE WITH ALL DESIGN DATA AND INFORMATION CONTAINED IN THIS DRAWING.
5. STRUCTURE SHALL MEET AASHTO HS20 AND CASTINGS SHALL MEET AASHTO M306 LOAD RATING, ASSUMING GROUNDWATER ELEVATION AT, OR BELOW, THE OUTLET PIPE INVERT ELEVATION. ENGINEER OF RECORD TO CONFIRM ACTUAL GROUNDWATER ELEVATION.
6. PVC HYDRAULIC SHEAR PLATE IS PLACED ON SHELF AT BOTTOM OF SCREEN CYLINDER. REMOVE AND REPLACE AS NECESSARY DURING MAINTENANCE CLEANING.

INSTALLATION NOTES
1. ANY SUB-BASE, BACKFILL DEPTH, AND/OR ANTI-FLOTATION PROVISIONS ARE SITE-SPECIFIC DESIGN CONSIDERATIONS AND SHALL BE SPECIFIED BY ENGINEER OF RECORD.
2. CONTRACTOR TO PROVIDE EQUIPMENT WITH SUFFICIENT LIFTING AND REACH CAPACITY TO LIFT AND SET THE CDS MANHOLE STRUCTURE (LIFTING CLUTCHES PROVIDED).
3. CONTRACTOR TO ADD JOINT SEALANT BETWEEN ALL STRUCTURE SECTIONS, AND ASSEMBLE STRUCTURE.
4. CONTRACTOR TO PROVIDE, INSTALL, AND GROUT PIPES. MATCH PIPE INVERTS WITH ELEVATIONS SHOWN.
5. CONTRACTOR TO TAKE APPROPRIATE MEASURES TO ASSURE UNIT IS WATER TIGHT, HOLDING WATER TO FLOWLINE INVERT MINIMUM. IT IS SUGGESTED THAT ALL JOINTS BELOW PIPE INVERTS ARE GROUTED.

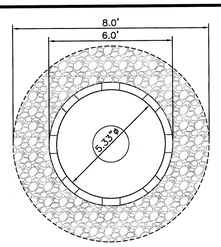

PLAN
NOT TO SCALE

GENERAL NOTES: CONCRETE:
1. ALL DRAINAGE STUCTURES SHALL BE PRECAST CONCRETE.
2. 28 DAY COMPRESSIVE STRENGTH F'E = 5,000 PSI STEEL REINFORCEMENT: ASTM A-615, GRADE 60, ASTM A-185, GRADE 65
3. COVER TO STEEL-1" MINIMUM
4. DESIGN LOADING-AASHTO HS-20-44 LIVE LOAD
5. EARTH COVER-0 TO 5 FEET MAX.
6. CONSTRUCTION JOINT-FLAT
7. APPROXIMATE WEIGHTS TOP SLAB @ 2.50 TONS 6' BASE SECTION @ 3.50 TONS.

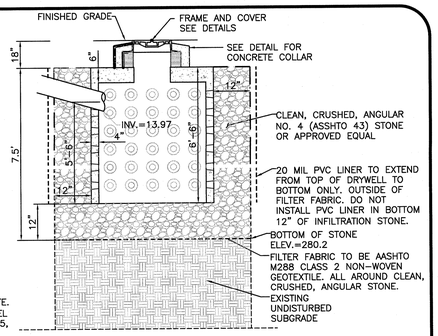

ELEVATION
PRECAST DRYWELL
NOT TO SCALE

1000 GALLON CONCRETE CYLINDRICAL DRY WELL
(6)

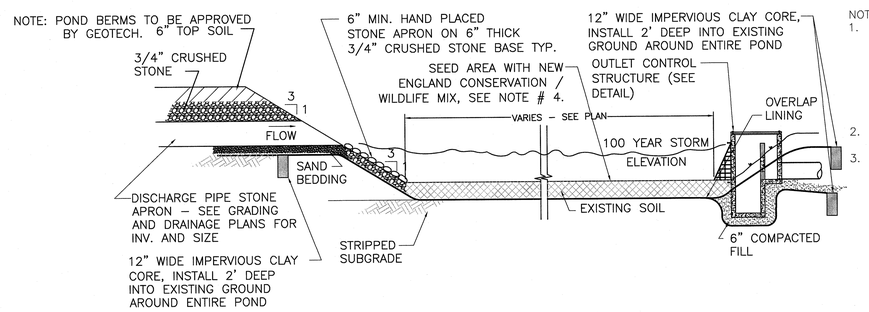

NOTE:
1. CLAY CORE TO BE CONSTRUCTED OF IMPERVIOUS SOIL BORROW AND TO BE COMPACTED TO 90% OF MAXIMUM DRY DENSITY WITH 6" OF TOPSOIL. BERM TO BE SEEDED. IMPERVIOUS CLAY CORE TO BE FREE OF PEAT STUMPS, BRUSH, ORGANIC SOILS AND OTHER DELETERIOUS MATERIALS. CORE MATERIAL TO HAVE PERMEABILITY OF 1 x10^-4 CM/SEC
2. FINAL DESIGN TO BE BASED ON GEOTECHNICAL REPORT.
3. "NEW ENGLAND CONSERVATION WILDLIFE MIX" SEED WILL BE DISPERSED ON THE SLOPES AND BOTTOM OF THE DETENTION AREA AT A RATIO OF 1 POUND PER 1,000 SQUARE FEET AS AVAILABLE FROM NEW ENGLAND WETLAND PLANTS, INC. 820 WEST ST., AMHERST, MA, 413-548-8000. SEE LANDSCAPE PLAN FOR SEED MIX.

TYPICAL DETENTION POND DETAIL
NOT TO SCALE
(7)

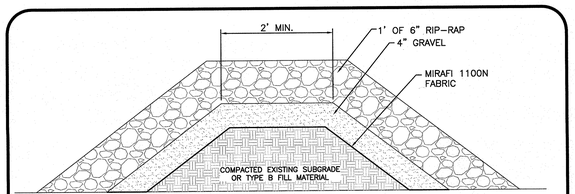

SECTION VIEW

NOTE:
1. REFER TO PLAN SHEETS, C-4A TO C-4C FOR CHECK DAM HEIGHT, DISTANCE FROM FLARED END SECTION.
2. TOP OF CHECK DAM ELEVATION CORRESPONDS TO THE TOP OF GRAVEL ELEVATION OF THE CHECK DAM, NOT THE TOP OF RIP RAP ELEVATION.

SEDIMENT FOREBAY CHECK DAM DETAIL
NOT TO SCALE
(8)

11/2/17
COMMONWEALTH OF MASSACHUSETTS
TIMOTHY J. WILLIAMS
CIVIL
No. 43119
REGISTERED PROFESSIONAL ENGINEER

PROFESSIONAL ENGINEER FOR
ALLEN & MAJOR ASSOCIATES, INC.

CUBE 3
architecture interiors planning
360 Merrimack Street Lawrence MA 01843
phone: 978.989.9900 www.cube3studio.com

project information:
BROADSTONE BARE COVE
HINGHAM
230 BEAL ST.
HINGHAM, MA

client information:
Broadstone Bare Cove Alliance, LLC.
C/O Alliance Residential Company
184 High Street Suite
401 Boston, MA 02110

consultant information:
PREPARED BY
ALLEN & MAJOR ASSOCIATES, INC.
civil & structural engineering • land surveying
environmental consulting • landscape architecture
100 COMMERCE WAY
WOBURN, MA 01801
TEL: (781) 935-0890
FAX: (781) 935-5896
WOBURN, MA • LAKEVILLE, MA • MANCHESTER, NH

issuance:
COMPREHENSIVE PERMIT APPLICATION PLANS
NOT FOR CONSTRUCTION

key plan:

drawing information:

drawing by:	SJL
drawing checked by:	CMQ
drawing scale:	1"=40'
drawing date:	12 AUGUST 2017
project number:	2118-02

drawing revisions:

No.	Description	Date
1	Issued for ZBA Resubmittal	10/25/16
2	Issued for ZBA Resubmittal	11/02/16
3	Issued for ZBA Resubmittal	01/04/17
4	Issued for ZBA Resubmittal	01/19/17
5	Issued for ZBA Resubmittal	02/14/17
6	Issued for ZBA Resubmittal	03/29/17
7	Issued for ZBA Resubmittal	04/11/17
8	Modifications to Project Plans	11/02/17

registration:

drawing name: DETAILS

drawing number: D-9

N:\PROJECTS\2118-02\CIVIL\DRAWINGS\CURRENT\C-2118-02 - DETAILS.DWG

COPYRIGHT (C) 2017 CUBE 3 STUDIO LLC, ALL RIGHTS RESERVED

CUBE 3
architecture interiors planning
360 Merrimack Street Lawrence MA 01843
phone: 978.989.9900 www.cube3studio.com

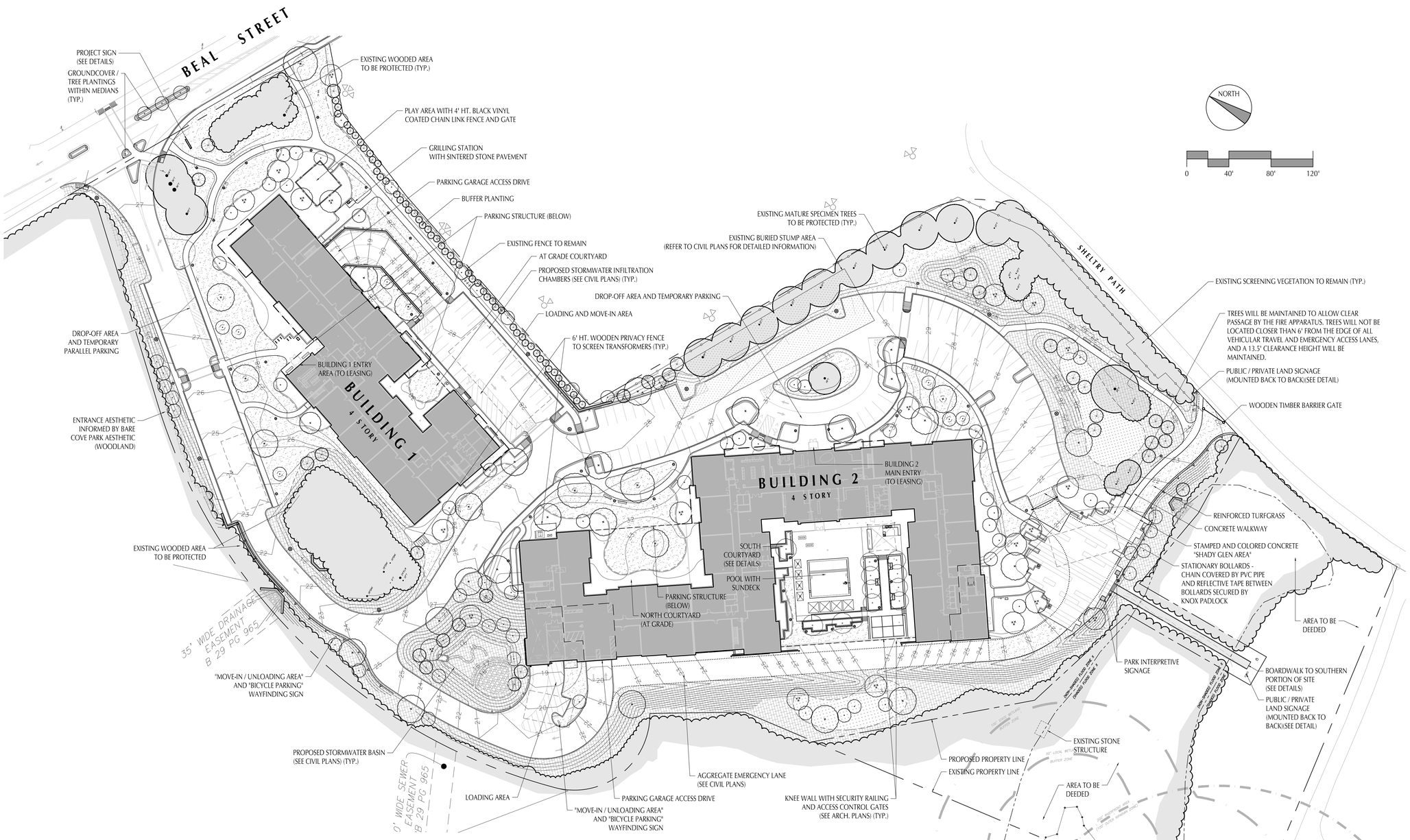

LEGEND

SYMBOL	DESCRIPTION	REF.	SYMBOL	DESCRIPTION	REF.	SYMBOL	DESCRIPTION	REF.	SYMBOL	DESCRIPTION	REF.
	EXISTING SPECIMEN TREES TO REMAIN			SHRUBS / PERENNIALS / GRASSES / GROUNDCOVERS	4 / L-505		SEAT WALL IN COURTYARD (16" WIDE CAP WIDTH)	3.7 / L-500		BOLLARD LIGHTING FIXTURE	5 / L-504
	EXISTING WOODED AREA TO REMAIN			WILDFLOWER MEADOW AREA CONSERVATION SEED MIX WWW.NEWP.COM			RAISED PLANTER WALL IN COURTYARD (8" WIDE)	3.6 / L-500		PEDESTRIAN SCALE LIGHTING FIXTURE	4 / L-504
	ORNAMENTAL TREE (BIRCH, ETC.)	2 / L-505		WOODLAND SEED AREA ROADSIDE UPLAND SEED MIX WWW.NEWP.COM			FLUSH CURB WITH SHELF IN COURTYARD (8" WIDE)	1.23 / L-500		DRIVE / PARKING AREA LIGHTING FIXTURE (WITH HOUSE SIDE SHIELD)	6 / L-504
	FLOWERING TREE (DOGWOOD, ETC.)	2 / L-505		LAWN	6 / L-505		CONCRETE PAVEMENT (SEE CIVIL PLANS)			BIKE RACKS	8 / L-503
	EVERGREEN (PINE, ETC.)	1 / L-505		EDGE OF LAWN			INTEGRALLY COLORED CONCRETE PAVEMENT	10 / L-503		BENCHES	7 / L-503
	DECIDUOUS SHADE TREE (MAPLE, ETC.)	2 / L-505		GUARD RAIL (SEE CIVIL PLANS)			TRASH RECEPTACLE	6 / L-503		SIGN (SEE CIVIL PLANS)	
				RETAINING WALL (SEE CIVIL PLANS)						PET WASTE STATION	3 / L-503

project information:
Broadstone Bare Cove
230 Beal Street, Hingham, MA 02043

client information:
Broadstone Bare Cove Alliance, LLC.
C/O Alliance Residential Company
184 High Street Suite 401 Boston, MA 02110

consultant information:
Shadley Associates
Landscape Architects / Site Planning Consultants
1730 Massachusetts Ave. • P 781.862.8809
Lexington, MA 02420 • F 781.862.2687
www.shadleyassociates.com

issuance:
COMPREHENSIVE PERMIT APPLICATION PLANS
NOT FOR CONSTRUCTION

key plan:

drawing information:

drawing by:	JPG / RS
drawing checked by:	JPG / JPS
drawing scale:	1" = 40'-0"
drawing date:	12 AUGUST 2016
project number:	15122.00 / 15062.0.00

drawing revisions:

No.	Description	Date
1	ZBA Resubmittal	10 / 25 / 16
2	ZBA Resubmittal	11 / 2 / 16
3	ZBA Resubmittal	1 / 4 / 17
4	ZBA Resubmittal	1 / 19 / 17
5	ZBA Resubmittal	2 / 14 / 17
6	ZBA Resubmittal	3 / 29 / 17
7	ZBA Resubmittal	4 / 11 / 17
8	Modifications to Project Plans	10 / 26 / 17
9	Modifications to Project Plans	11 / 2 / 17

registration:
MASSACHUSETTS REGISTERED LANDSCAPE ARCHITECT
JAMES P. SHADLEY
NO. 993

drawing name:
OVERALL SITE PLAN

drawing number:
L-100

File Name: BR_L-100_000.dwg

COPYRIGHT (C) 2017 CUBE 3 STUDIO LLC, ALL RIGHTS RESERVED

PHOTOMETRIC NOTES

1. PHOTOMETRIC ANALYSIS BY OMNILITE, INC.
   ADDRESS: 263 WINN STREET, BURLINGTON, MA. 01803. PHONE: 781-272-2300.
2. BOLLARD LIGHTING FIXTURE TO BE HARBORTOWN CYLINDRICAL BODY LED SERIES WITH BLACK TEXTURED FINISH BY STERNBERG LIGHTING OR COMPARABLE AS APPROVED BY OWNER.
3. PEDESTRIAN SCALE LIGHTING FIXTURE TO BE SMALL SCALE CHATEAU LED SERIES WITH BLACK TEXTURED FINISH WITH 12' HEIGHT POLE BY STERNBERG LIGHTING OR COMPARABLE AS APPROVED BY OWNER.
4. PARKING AREA LIGHTING FIXTURE TO BE LARGE SCALE CHATEAU LED SERIES WITH BLACK TEXTURED FINISH WITH 16' HEIGHT POLE BY STERNBERG LIGHTING OR COMPARABLE AS APPROVED BY OWNER.
5. THIS PLAN DEPICTS SITE LIGHTING LEVELS ONLY. IT IS ANTICIPATED THAT ALL DOORWAYS, LOADING AREAS, AND PARKING GARAGE SPACES AND RAMPS WILL BE LIT BY BUILDING MOUNTED FIXTURES TO BE DETERMINED.
6. NO PROPOSED FIXTURES TO EXCEED 3500° KELVIN COLOR TEMPERATURE.
7. ALL SITE LIGHTING FIXTURES PROPOSED ARE DARK SKY COMPLIANT.

LEGEND

●	BOLLARD LIGHTING FIXTURE	5 / L-504
●	PEDESTRIAN SCALE LIGHTING FIXTURE	4 / L-504
●	DRIVE / PARKING AREA LIGHTING FIXTURE (WITH HOUSE SIDE SHIELD)	6 / L-504
	EXISTING OFF-SITE SPORTS LIGHTING (NOT INCLUDED IN CALCULATION)	
+0.0	LIGHTING LEVEL IN FOOTCANDLES	

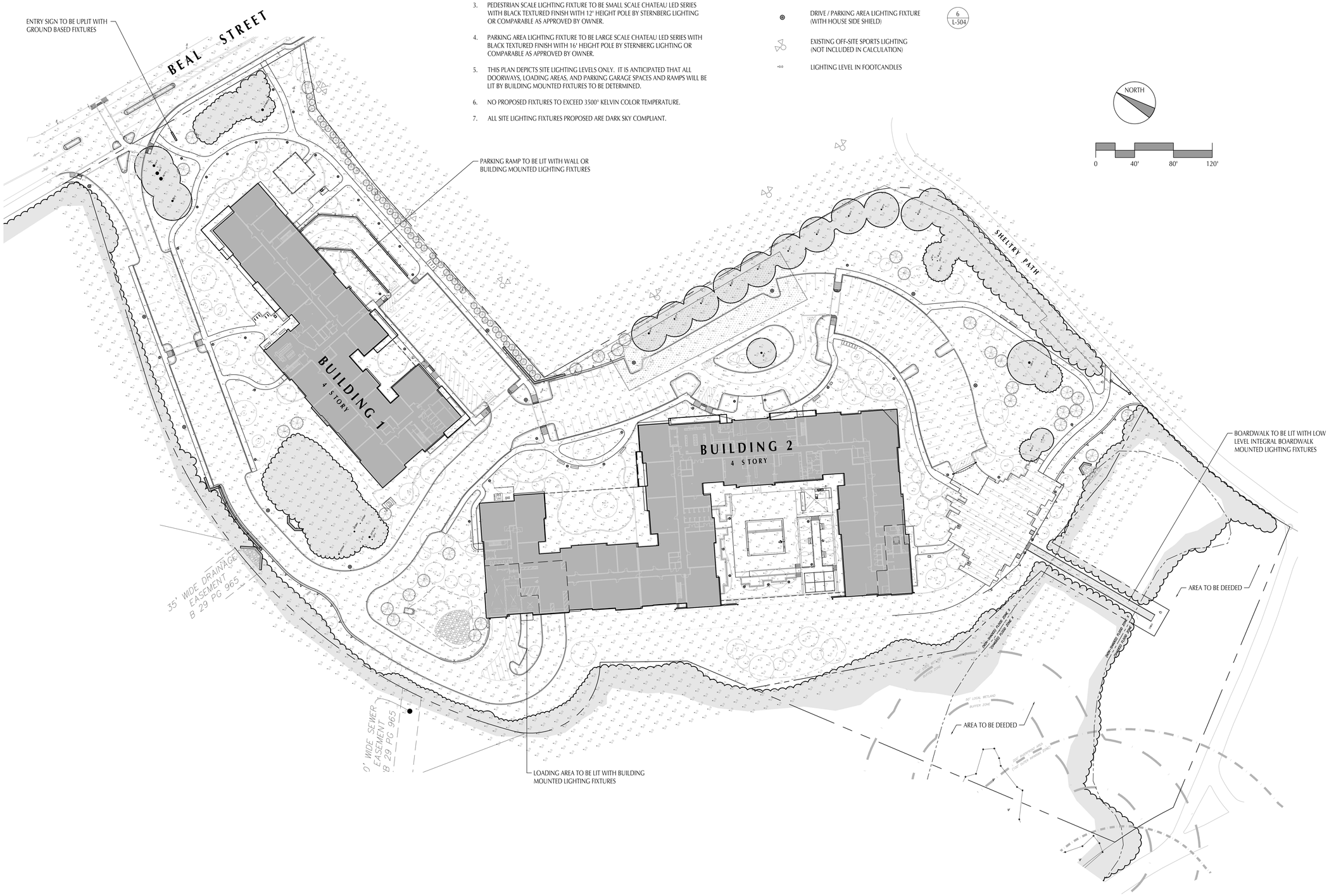

CUBE 3
architecture interiors planning
360 Merrimack Street Lawrence MA 01843
phone: 978.989.9900 www.cube3studio.com

project information

Broadstone Bare Cove

230 Beal Street,
Hingham, MA 02043

client information

Broadstone Bare Cove Alliance, LLC.

C/O Alliance
Residential Company
184 High Street Suite
401 Boston, MA 02110

consultant information

Shadley Associates
Landscape Architects / Site Planning Consultants
1730 Massachusetts Ave. • P 781.862.8809
Lexington, MA 02420 • F 781.862.2687
www.shadleyassociates.com

issuance

COMPREHENSIVE PERMIT APPLICATION PLANS

NOT FOR CONSTRUCTION

key plan

drawing information

drawing by:	JPG / RS
drawing checked by:	JPG / JPS
drawing scale:	1" = 40'-0"
drawing date:	12 AUGUST 2016
project number:	15122.00 / 15062.0.00

drawing revisions:

No.	Description	Date
1	ZBA Resubmittal	10 / 25 / 16
2	ZBA Resubmittal	11 / 2 / 16
3	ZBA Resubmittal	1 / 4 / 17
4	ZBA Resubmittal	1 / 19 / 17
5	ZBA Resubmittal	2 / 14 / 17
6	ZBA Resubmittal	3 / 29 / 17
7	ZBA Resubmittal	4 / 11 / 17
8	Modifications to Project Plans	10 / 26 / 17
9	Modifications to Project Plans	11 / 2 / 17

registration

drawing name

PHOTOMETRIC ANALYSIS

drawing number

L-101

File Name: BBC_L-101_PD.dwg

COPYRIGHT (C) 2017 CUBE 3 STUDIO LLC, ALL RIGHTS RESERVED

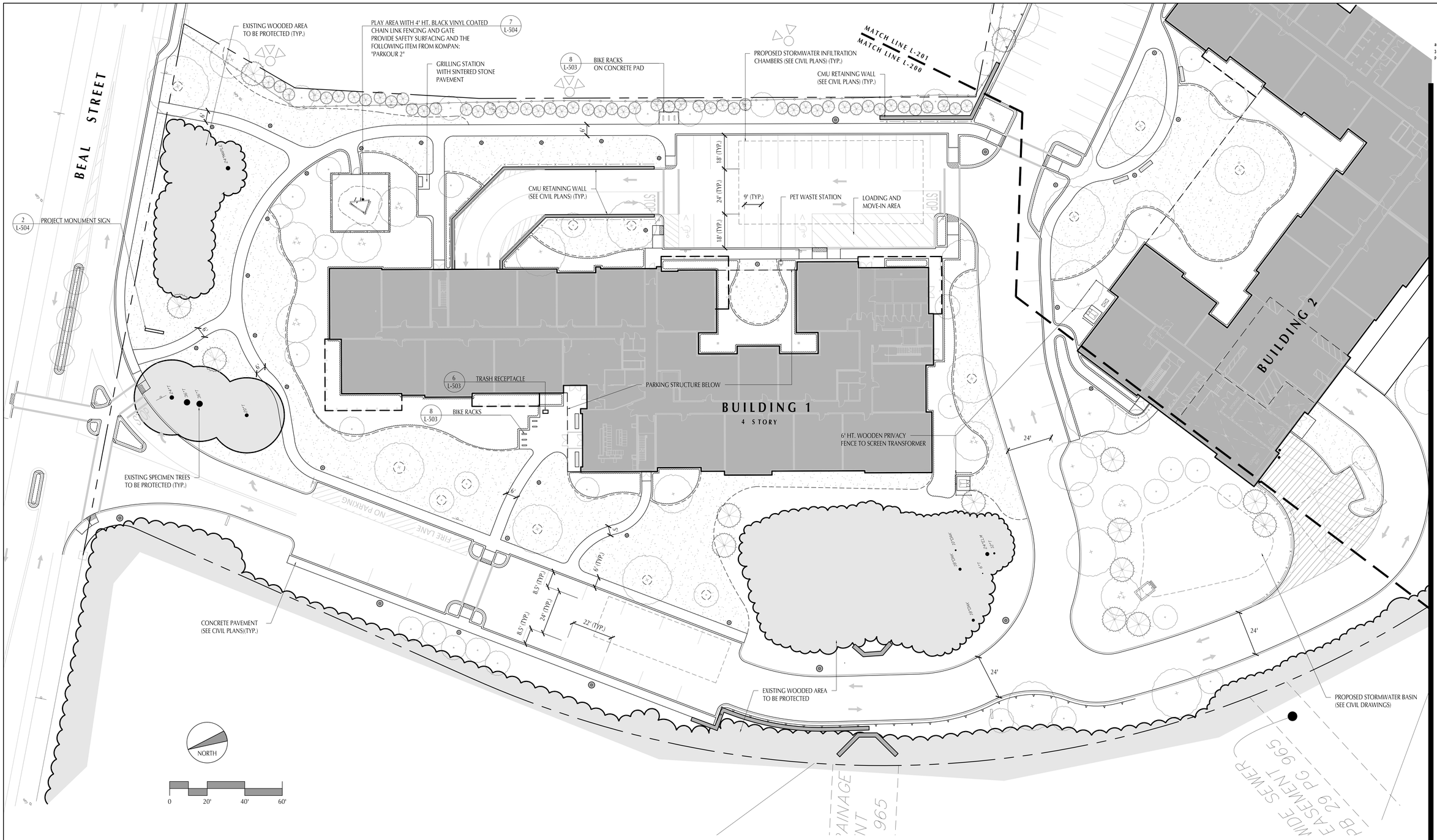

LEGEND

SYMBOL	DESCRIPTION	REF.	SYMBOL	DESCRIPTION	REF.	SYMBOL	DESCRIPTION	REF.	SYMBOL	DESCRIPTION	REF.
	EXISTING SPECIMEN TREES TO REMAIN			SHRUBS / PERENNIALS / GRASSES / GROUNDCOVERS	4 L-505		SEAT WALL IN COURTYARD (16" WIDE CAP WIDTH)	3.7 L-500		BOLLARD LIGHTING FIXTURE	5 L-504
	EXISTING WOODED AREA TO REMAIN			WILDFLOWER MEADOW AREA CONSERVATION SEED MIX WWW.NEWP.COM			RAISED PLANTER WALL IN COURTYARD (8" WIDE)	3.6 L-500		PEDESTRIAN SCALE LIGHTING FIXTURE	4 L-504
	ORNAMENTAL TREE (BIRCH, ETC.)	2 L-505		WOODLAND SEED AREA ROADSIDE UPLAND SEED MIX WWW.NEWP.COM			FLUSH CURB WITH SHELF IN COURTYARD (8" WIDE)	1.23 L-500		DRIVE / PARKING AREA LIGHTING FIXTURE (WITH HOUSE SIDE SHIELD)	6 L-504
	FLOWERING TREE (DOGWOOD, ETC.)	2 L-505		LAWN	6 L-505		CONCRETE PAVEMENT (SEE CIVIL PLANS)			BIKE RACKS	8 L-503
	EVERGREEN (PINE, ETC.)	1 L-505		EDGE OF LAWN			INTEGRALLY COLORED CONCRETE PAVEMENT	10 L-503		BENCHES	7 L-503
	DECIDUOUS SHADE TREE (MAPLE, ETC.)	2 L-505		GUARD RAIL (SEE CIVIL PLANS)			TRASH RECEPTACLE	6 L-503		SIGN (SEE CIVIL PLANS)	
				RETAINING WALL (SEE CIVIL PLANS)						PET WASTE STATION	3 L-503

LAYOUT AND MATERIALS NOTES:

1. THE CONTRACTOR SHALL REVIEW ALL DRAWINGS AND SPECIFICATIONS TO DETERMINE THE TOTAL SCOPE OF WORK AND ALL REQUIRED COORDINATION PRIOR TO COMMENCING WORK.
2. THE CONTRACTOR IS RESPONSIBLE FOR A THOROUGH SITE EXAMINATION TO SATISFY HER OR HIMSELF AS TO THE ACTUAL SITE CONDITIONS PRIOR TO COMMENCING WORK.
3. EXPANSION JOINT FILLER AND SEALANT SHALL BE PLACED WHERE CONCRETE PAVEMENT MEETS WALLS OR OTHER VERTICAL ELEMENTS AS SHOWN ON THE DRAWINGS.
4. ANY AREA THAT IS DISTURBED BY CONSTRUCTION ACTIVITIES BOTH INSIDE AND OUTSIDE THE LIMIT OF WORK, SHALL BE REPAIRED AND RESTORED TO ITS ORIGINAL CONDITION BY THE CONTRACTOR AT NO ADDITIONAL COST TO THE OWNER.
5. ALL LINE AND GRADE WORK PER DRAWINGS AND SPECIFICATIONS SHALL BE LAID OUT BY A REGISTERED CIVIL ENGINEER OR SURVEYOR ENGAGED BY THE CONTRACTOR.
6. ALL LINES AND DIMENSIONS ARE PARALLEL OR PERPENDICULAR TO THE LINES FROM WHICH THEY ARE MEASURED UNLESS OTHERWISE INDICATED.
7. ALL DIMENSIONS ARE FROM FACE OF CURB, WALL, OR CENTERLINE OF PAVEMENT UNLESS OTHERWISE NOTED.
8. THE DIMENSIONS SHOWN ON THE DRAWINGS SHOW DESIGN INTENT AND MUST BE FIELD VERIFIED PRIOR TO PREPARATION OF SHOP DRAWINGS. SHOP DRAWINGS SHALL BE BASED UPON ACTUAL LAYOUT AND FIELD MEASUREMENT BY THE CONTRACTOR.
9. ALL PROPOSED SITE FEATURES SHALL BE LAID OUT AND STAKED BY THE CONTRACTOR FOR REVIEW AND APPROVAL BY THE OWNER'S REPRESENTATIVE. ANY REQUIRED ADJUSTMENTS TO THE LAYOUT SHALL BE UNDERTAKEN BY THE CONTRACTOR AT NO ADDITIONAL COST TO THE OWNER.
10. WHERE NEW PAVING OR EARTHWORK MEETS EXISTING PAVING OR EARTHWORK, SMOOTHLY BLEND LINE OF EXISTING WITH NEW.
11. AT ALL LOCATIONS WHERE EXISTING PAVEMENT ABUTS NEW CONSTRUCTION, THE EDGE OF THE EXISTING PAVEMENT SHALL BE SAWCUT TO A CLEAN SMOOTH EDGE. NEW PAVEMENT ABUTTING THE SAWCUT SHALL HAVE A THERMAL SEAL.
12. THE CONTRACTOR IS RESPONSIBLE FOR DOCUMENTING THE LOCATIONS OF ANY EXISTING SITE ELEMENTS TO BE RESET IN THEIR SAME HORIZONTAL LOCATION.
13. RESTORE EXISTING CONDITIONS AS NECESSARY IN ALL AREAS DISTURBED BY THE CONSTRUCTION OF THIS PROJECT BOTH INSIDE AND OUTSIDE THE LIMIT OF WORK, INCLUDING, BUT NOT LIMITED TO, RESETTING SITE IMPROVEMENTS, REPAVING AND SEEDING AT NO ADDITIONAL COST TO THE OWNER. THIS INCLUDES RESTORING LAYDOWN AREAS AND CONSTRUCTION ACCESS TO THEIR ORIGINAL CONDITIONS.
14. EXISTING CONDITIONS AND PROPOSED CONDITIONS (SIDEWALKS, ROADWAY, PARKING, ETC. OUTSIDE ENTRY AND PLAZA AREAS) DEPICTED BASED ON CIVIL PLANS AND LINEWORK BY ALLEN AND MAJOR ASSOCIATES, INC. CONTRACTOR TO REVIEW CIVIL DRAWINGS AND REPORT ANY DISCREPANCIES WITH THE LANDSCAPE PLANS TO THE LANDSCAPE ARCHITECT PRIOR TO FINALIZING PRICING AND BEFORE ANY CONSTRUCTION.
15. THE FOLLOWING NOTES APPLY TO ALL EXISTING TREES TO REMAIN. INSTALL TREE PROTECTION FENCE AROUND THE ENTIRE PERIMETER OF CANOPY DRIP LINE WITHIN THE SITE BEFORE ANY OTHER PROJECT WORK COMMENCES IN THE AREA. DO NO WORK UNDER TREE CANOPY AND / OR DRIP LINE UNLESS AREA IS PROTECTED. DO NOT DRIVE OR PARK UNDER TREES. DO NOT PLACE OR STORE ANY MATERIALS UNDER TREES.

CUBE 3
architecture interiors planning
360 Merrimack Street Lawrence MA 01843
phone: 978.989.9900 www.cube3studio.com

project information

Broadstone Bare Cove

230 Beal Street, Hingham, MA 02043

client information

Broadstone Bare Cove Alliance, LLC.

C/O Alliance Residential Company
184 High Street Suite 401 Boston, MA 02110

consultant information

Shadley Associates
Landscape Architects / Site Planning Consultants
1730 Massachusetts Ave. • P 781.862.8809
Lexington, MA 02420 • F 781.862.2687
www.shadleyassociates.com

issuance

COMPREHENSIVE PERMIT APPLICATION PLANS

NOT FOR CONSTRUCTION

key plan

drawing information

drawing by:	JPG / RS
drawing checked by:	JPG / JPS
drawing scale:	1" = 20'-0"
drawing date:	12 AUGUST 2016
project number:	15122.00 / 15062.0.00

drawing revisions:

No.	Description	Date
1	ZBA Resubmittal	10 / 25 / 16
2	ZBA Resubmittal	11 / 2 / 16
3	ZBA Resubmittal	1 / 4 / 17
4	ZBA Resubmittal	1 / 19 / 17
5	ZBA Resubmittal	2 / 14 / 17
6	ZBA Resubmittal	3 / 29 / 17
7	ZBA Resubmittal	4 / 11 / 17
8	Modifications to Project Plans	10 / 26 / 17
9	Modifications to Project Plans	11 / 2 / 17

registration

MASSACHUSETTS JAMES P. SHADLEY LANDSCAPE ARCHITECT NO. 993

drawing name

BUILDING 1 LAYOUT & MATERIALS PLAN

drawing number

L-200

File Name: BR-L-200_200.dwg

COPYRIGHT (C) 2017 CUBE 3 STUDIO LLC, ALL RIGHTS RESERVED

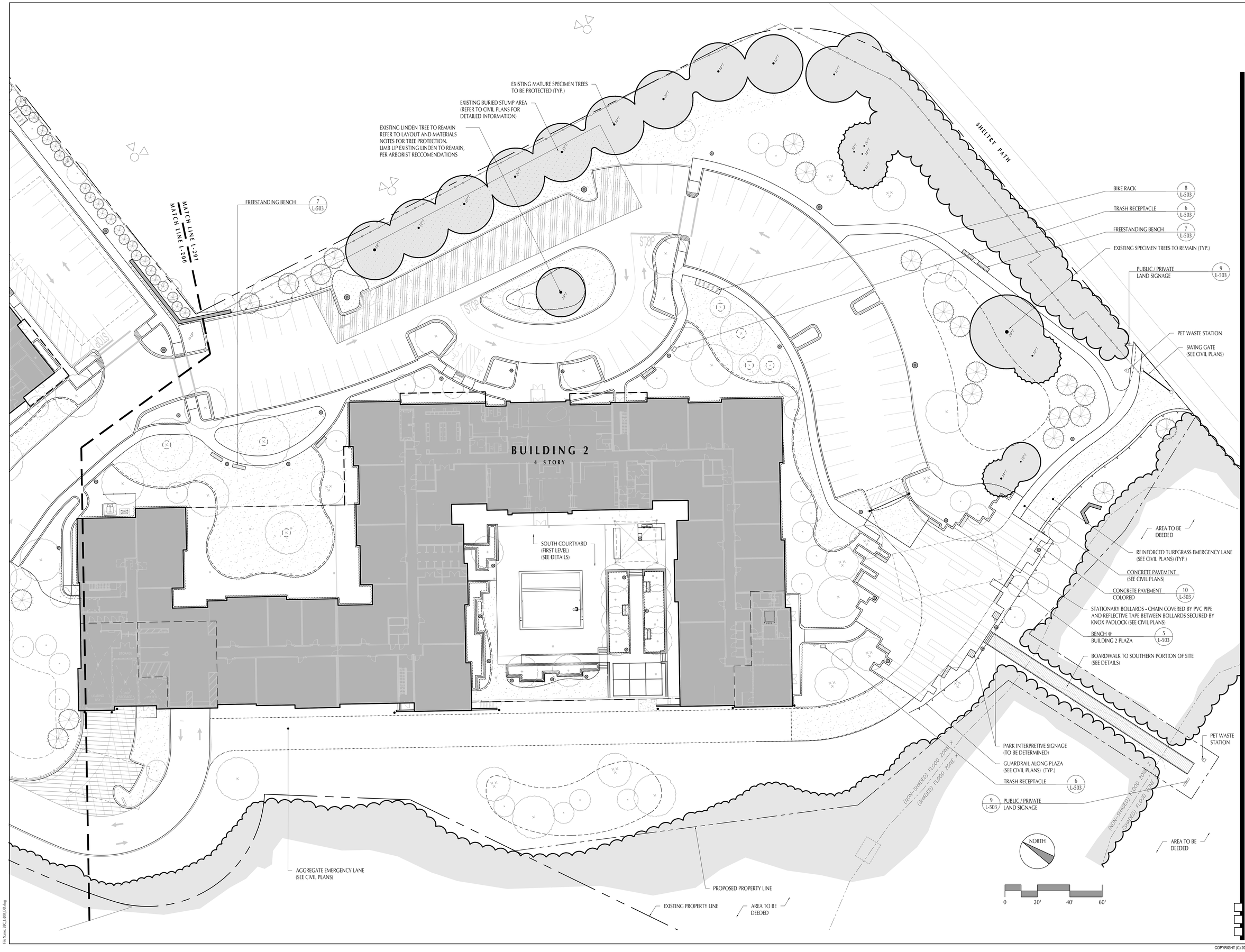

CUBE 3
architecture interiors planning
360 Merrimack Street Lawrence MA 01843
phone: 978.989.9900 www.cube3studio.com

project information:

Broadstone Bare Cove

230 Beal Street, Hingham, MA 02043

client information:

Broadstone Bare Cove Alliance, LLC.

C/O Alliance Residential Company
184 High Street Suite
401 Boston, MA 02110

consultant information:

Shadley Associates
Landscape Architects / Site Planning Consultants
1730 Massachusetts Ave. • P 781.652.8809
Lexington, MA 02420 • F 781.862.2687
www.shadleyassociates.com

issuance:

COMPREHENSIVE PERMIT APPLICATION PLANS

NOT FOR CONSTRUCTION

key plan:

drawing information:

drawing by:	JPG / RS
drawing checked by:	JPG / JPS
drawing scale:	1" = 20'-0"
drawing date:	12 AUGUST 2016
project number:	15122.00 / 15062.0.00

drawing revisions:

No.	Description	Date
1	ZBA Resubmittal	10 / 25 / 16
2	ZBA Resubmittal	11 / 2 / 16
3	ZBA Resubmittal	1 / 4 / 17
4	ZBA Resubmittal	1 / 19 / 17
5	ZBA Resubmittal	2 / 14 / 17
6	ZBA Resubmittal	3 / 29 / 17
7	ZBA Resubmittal	4 / 11 / 17
8	Modifications to Project Plans	10 / 26 / 17
9	Modifications to Project Plans	11 / 2 / 17

registration:

MASSACHUSETTS JAMES P. SHADLEY REGISTERED LANDSCAPE ARCHITECT NO. 993

drawing name:

BUILDING 2 LAYOUT & MATERIALS PLAN

drawing number:

L-201

File Name: BBC_L-200_DD.dwg

COPYRIGHT (C) 2017 CUBE 3 STUDIO LLC, ALL RIGHTS RESERVED

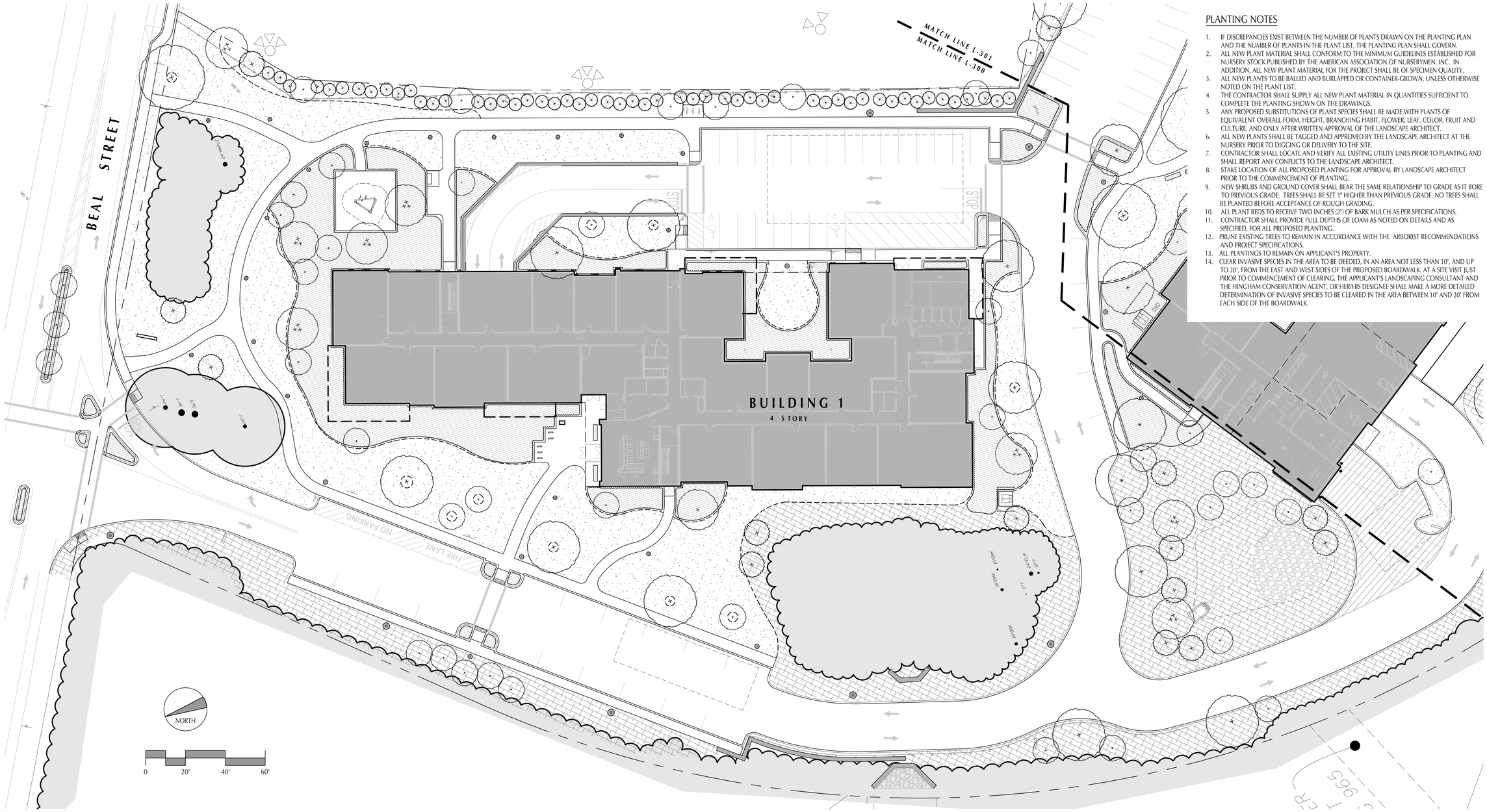

PLANTING NOTES

1. IF DISCREPANCIES EXIST BETWEEN THE NUMBER OF PLANTS DRAWN ON THE PLANTING PLAN AND THE NUMBER OF PLANTS IN THE PLANT LIST, THE PLANTING PLAN SHALL GOVERN.
2. ALL NEW PLANT MATERIAL SHALL CONFORM TO THE MINIMUM GUIDELINES ESTABLISHED FOR NURSERY STOCK PUBLISHED BY THE AMERICAN ASSOCIATION OF NURSERYMEN, INC. IN ADDITION, ALL NEW PLANT MATERIAL FOR THE PROJECT SHALL BE OF SPECIMEN QUALITY.
3. ALL NEW PLANTS TO BE BALLED AND BURLAPPED OR CONTAINER-GROWN, UNLESS OTHERWISE NOTED ON THE PLANT LIST.
4. THE CONTRACTOR SHALL SUPPLY ALL NEW PLANT MATERIAL IN QUANTITIES SUFFICIENT TO COMPLETE THE PLANTING SHOWN ON THE DRAWINGS.
5. ANY PROPOSED SUBSTITUTIONS OF PLANT SPECIES SHALL BE MADE WITH PLANTS OF EQUIVALENT OVERALL FORM, HEIGHT, BRANCHING HABIT, FLOWER, LEAF, COLOR, FRUIT AND CULTURE, AND ONLY AFTER WRITTEN APPROVAL OF THE LANDSCAPE ARCHITECT.
6. ALL NEW PLANTS SHALL BE TAGGED AND APPROVED BY THE LANDSCAPE ARCHITECT AT THE NURSERY PRIOR TO DIGGING OR DELIVERY TO THE SITE.
7. CONTRACTOR SHALL LOCATE AND VERIFY ALL EXISTING UTILITY LINES PRIOR TO PLANTING AND SHALL REPORT ANY CONFLICTS TO THE LANDSCAPE ARCHITECT.
8. STAKE LOCATION OF ALL PROPOSED PLANTING FOR APPROVAL BY LANDSCAPE ARCHITECT PRIOR TO THE COMMENCEMENT OF PLANTING.
9. NEW SHRUBS AND GROUND COVER SHALL BEAR THE SAME RELATIONSHIP TO GRADE AS IT BORE TO PREVIOUS GRADE. TREES SHALL BE SET 3" HIGHER THAN PREVIOUS GRADE. NO TREES SHALL BE PLANTED BEFORE ACCEPTANCE OF ROUGH GRADING.
10. ALL PLANT BEDS TO RECEIVE TWO INCHES (2") OF BARK MULCH AS PER SPECIFICATIONS.
11. CONTRACTOR SHALL PROVIDE FULL DEPTHS OF LOAM AS NOTED ON DETAILS AND AS SPECIFIED, FOR ALL PROPOSED PLANTING.
12. PRUNE EXISTING TREES TO REMAIN IN ACCORDANCE WITH THE ARBORIST RECOMMENDATIONS AND PROJECT SPECIFICATIONS.
13. ALL PLANTINGS TO REMAIN ON APPLICANT'S PROPERTY.
14. CLEAR INVASIVE SPECIES IN THE AREA TO BE DEEDED, IN AN AREA NOT LESS THAN 10', AND UP TO 20', FROM THE EAST AND WEST SIDES OF THE PROPOSED BOARDWALK. AT A SITE VISIT JUST PRIOR TO COMMENCEMENT OF CLEARING, THE APPLICANT'S LANDSCAPING CONSULTANT AND THE HINGHAM CONSERVATION AGENT, OR HER/HIS DESIGNEE SHALL MAKE A MORE DETAILED DETERMINATION OF INVASIVE SPECIES TO BE CLEARED IN THE AREA BETWEEN 10' AND 20' FROM EACH SIDE OF THE BOARDWALK.

REPRESENTATIVE PLANTING SCHEDULE

SYM	QTY	BOTANICAL NAME	COMMON NAME	SIZE	COMMENTS
DECIDUOUS SHADE TREES **(29 TOTAL)**					
AR	-	Acer rubrum	Red Maple	3 1/2" - 4" CAL.	
AS	-	Acer saccharum	Sugar Maple	3 1/2" - 4" CAL.	
FG	-	Fagus grandiflora	American Beech	3 1/2" - 4" CAL.	
LT	-	Liriodendron tulipfera	Tulip poplar	3 1/2" - 4" CAL.	
QB	-	Quercus bicolor	Swamp White Oak	3 1/2" - 4" CAL.	
QC	-	Quercus coccinea	Scarlet Oak	3 1/2" - 4" CAL.	
QP	-	Quercus palustris	Pin Oak	3 1/2" - 4" CAL.	
QR	-	Quercus rubra	Red Oak	3 1/2" - 4" CAL.	
EVERGREEN TREES **(82 TOTAL)**					
JV	-	Juniperus virginiana	Red Cedar	7' - 8' HT.	
PS	-	Pinus strobus	Eastern White Pine	10' - 12' HT.	
TO	-	Thuja occidentalis 'Nigra'	Dark American Arborvitae	5' - 6' HT.	SINGLE LEADER, MATCHED
ORNAMENTAL TREES **(102 TOTAL)**					
AG	-	Amelanchier x grandiflora 'Autumn Brilliance'	Autumn Brilliance Apple Serviceberry	8' - 10' HT.	3 TRUNKS MIN., SPRING PLANT ONLY
BN	-	Betula nigra 'Heritage'	Heritage River Birch	10' - 12' HT.	3 TRUNKS MIN., SPRING PLANT ONLY
BP	-	Betula papyrifera	Paper Birch	10' - 12' HT.	3 TRUNKS MIN., SPRING PLANT ONLY
CA	-	Carpinus caroliniana	American Hornbeam	2" - 2 1/2" CAL.	
CC	-	Cercis canadensis 'Tennessee Pink'	Tennessee Pink Eastern Redbud	8' - 10' HT.	SINGLE STEM, SPRING PLANT ONLY
CF	-	Cornus florida	Flowering Dogwood	8' - 10' HT.	

SYM	QTY	BOTANICAL NAME	COMMON NAME	SIZE	COMMENTS
SHRUBS **480 LARGE SHRUBS BASED ON 15,000 SF AREA AT 6' O.C. SPACING;** **1,010 SMALL / MEDIUM SIZED SHRUBS BASED ON 15,000 SF AREA AT 4' O.C. SPACING**					
CA	-	Clethra alnifolia 'Hummingbird'	Hummingbird Summersweet Clethra	24" - 30" HT	5 CANE MINIMUM
CSA	-	Cornus sericea 'Arctic Fire'	Arctic Fire Redosier Dogwood	24" - 30" HT	5 CANE MINIMUM
FM	-	Fothergilla major 'Mt. Airy'	Mt. Airy Fothergilla	2 1/2" - 3' HT.	6 CANE MINIMUM
HV	-	Hamamelis virginiana	Common Witchhazel	4' - 5' HT.	6 CANE MINIMUM
HQ	-	Hydrangea quercifolia	Oakleaf Hydrangea	3' - 4' HT.	6 CANE MINIMUM
IG	-	Ilex glabra 'Shamrock'	Shamrock Inkberry	24" - 30" HT.	5 CANE MINIMUM
IV	-	Itea virginica 'Henry's Garnet'	Henry's Garnet Sweetspire	24" - 30" HT.	5 CANE MINIMUM
MP	-	Myrica pennsylvanica	Northern Bayberry	3' - 4' HT.	5 CANE MINIMUM
RM	-	Rhododendron maximum	Rosebay Rhododendron	30" - 36" HT	5 CANE MINIMUM
RA	-	Rhus aromatica 'Grow Low'	Grow Low Fragrant Sumac	15" - 18" HT.	4 CANE MINIMUM
SC	-	Sambucus canadensis	American Elder	30" - 36" HT.	5 CANE MINIMUM
TC	-	Taxus Canadensis	Canadian Yew	24" - 30" HT	20" MINIMUM SPREAD
VD	-	Viburnum dentatum	Arrowwood Viburnum	2 1/2" - 3' HT.	6 CANE MINIMUM
PERENNIALS, VINES AND GROUNDCOVERS TO BE DETERMINED **(2,900 PLANTS BASED ON 10,000 SF AREA AT 24" O.C. SPACING)**					

REQUIRED NUMBER OF 3" CALIPER TREES
ONE (1) 3" CALIPER TREE REQUIRED PER EVERY 10 PARKING SPACES
TOTAL OF 344 PARKING SPACES = (34) 3" CALIPER TREES REQUIRED
PROPOSED NUMBER OF 3" CALIPER TREES
18 PROPOSED TREES OF 3" (OR GREATER) CALIPER
16 EXISTING TREES OF 3" CALIPER (OR GREATER) CALIPER
TOTAL PROPOSED TREES WITH A 3" (OR GREATER) CALIPER = 34 (34 REQUIRED)

PLANTING LEGEND

SYMBOL	DESCRIPTION	REF.	SYMBOL	DESCRIPTION	REF.
	EXISTING SPECIMEN TREES TO REMAIN			SHRUBS/PERENNIALS/ GROUNDCOVER	4 / L-505
	EXISTING WOODED AREA TO REMAIN			WILDFLOWER MEADOW AREA CONSERVATION SEED MIX WWW.NEWP.COM	
	ORNAMENTAL TREE (BIRCH, ETC.)	2 / L-505		WOODLAND SEED AREA ROADSIDE UPLAND SEED MIX WWW.NEWP.COM	
	FLOWERING TREE (DOGWOOD, ETC.)	2 / L-505		LAWN	6 / L-505
	EVERGREEN (PINE, ETC.)	1 / L-505		EDGE OF LAWN	
	DECIDUOUS SHADE TREE (MAPLE, ETC.)	2 / L-505			

CUBE 3
architecture interiors planning
360 Merrimack Street Lawrence MA 01843
phone: 978.989.9900 www.cube3studio.com

project information

Broadstone Bare Cove

230 Beal Street,
Hingham, MA 02043

client information

Broadstone Bare Cove Alliance, LLC.

C/O Alliance
Residential Company
184 High Street Suite
401 Boston, MA 02110

consultant information

Shadley Associates
Landscape Architects / Site Planning Consultants
17301 Massachusetts Ave. • P 781.862.8809
Lexington, MA 02420 • F 781.862.2687
www.shadleyassociates.com

issuance

COMPREHENSIVE PERMIT APPLICATION PLANS

NOT FOR CONSTRUCTION

key plan

drawing information

drawing by:	JPG / RS
drawing checked by:	JPS / JPG
drawing scale:	1" = 20'-0"
drawing date:	12 AUGUST 2016
project number:	15122.00 / 15062.0.00

drawing revisions:

No.	Description	Date
1	ZBA Resubmittal	10 / 25 / 16
2	ZBA Resubmittal	11 / 2 / 16
3	ZBA Resubmittal	1 / 4 / 17
4	ZBA Resubmittal	1 / 19 / 17
5	ZBA Resubmittal	2 / 14 / 17
6	ZBA Resubmittal	3 / 29 / 17
7	ZBA Resubmittal	4 / 11 / 17
8	Modifications to Project Plans	10 / 26 / 17
9	Modifications to Project Plans	11 / 2 / 17

registration

drawing name

BUILDING 1
PLANTING PLAN

drawing number

L-300

File Name: BBC_L-300_00.dwg

COPYRIGHT (C) 2017 CUBE 3 STUDIO LLC, ALL RIGHTS RESERVED

QUANTITIES ARE NOTED ON L-300
PLANT SPECIFICATION AND LABELING TO BE DETERMINED

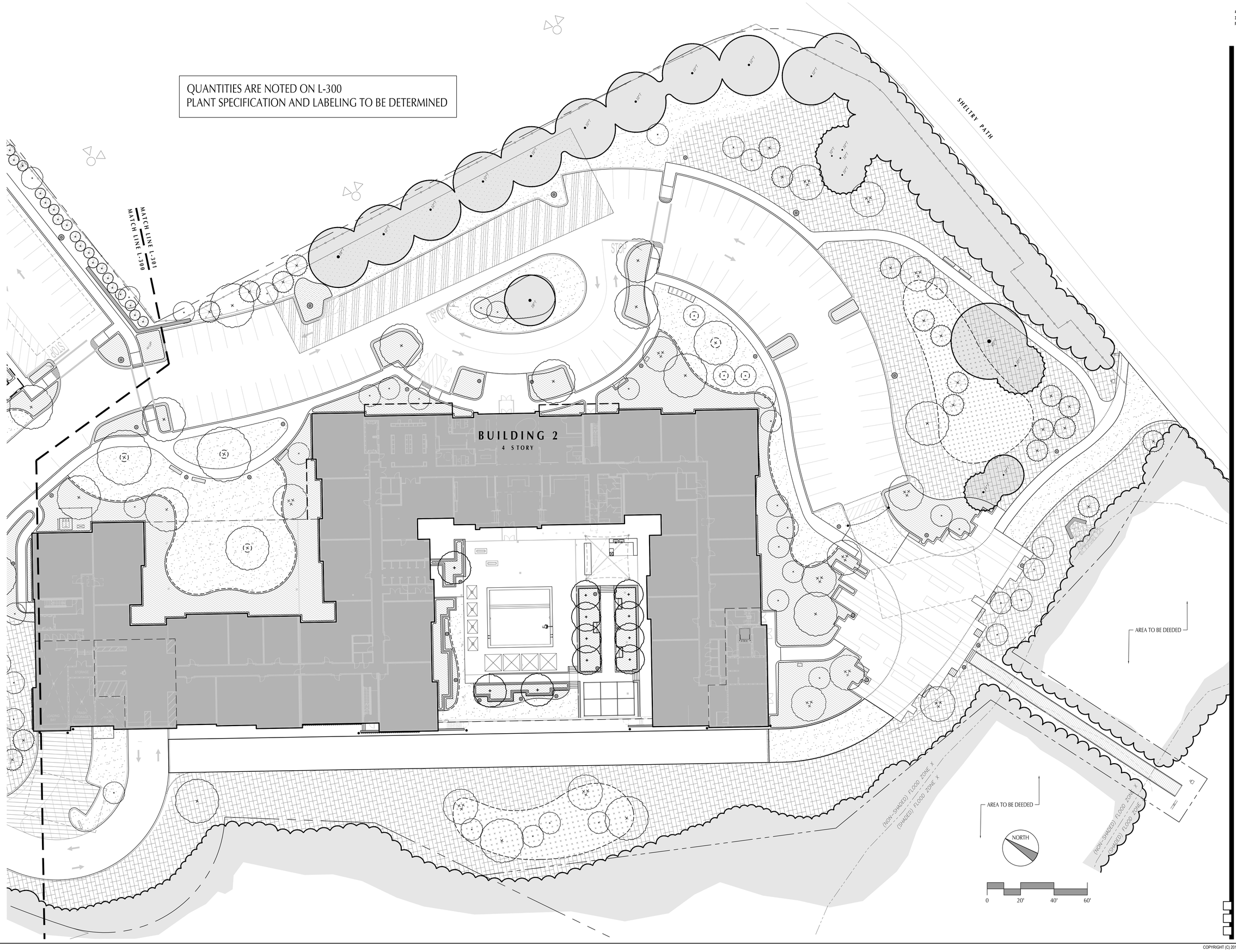

CUBE 3
architecture interiors planning
360 Merrimack Street Lawrence MA 01843
phone: 978.989.9900 www.cube3studio.com

project information:

Broadstone Bare Cove

230 Beal Street,
Hingham, MA 02043

client information:

Broadstone Bare Cove Alliance, LLC.

C/O Alliance
Residential Company
184 High Street Suite
401 Boston, MA 02110

consultant information:

Shadley Associates
Landscape Architects / Site Planning Consultants
1730 Massachusetts Ave. • P 781.862.8809
Lexington, MA 02420 • F 781.862.2687
www.shadleyassociates.com

issuance:

COMPREHENSIVE PERMIT APPLICATION PLANS

NOT FOR CONSTRUCTION

key plan:

drawing information:

drawing by:	JPG / RS
drawing checked by:	JPS / JPG
drawing scale:	1" = 20'-0"
drawing date:	12 AUGUST 2016
project number:	15122.00 / 15062.0.00

drawing revisions:

No.	Description	Date
1	ZBA Resubmittal	10 / 25 / 16
2	ZBA Resubmittal	11 / 2 / 16
3	ZBA Resubmittal	1 / 4 / 17
4	ZBA Resubmittal	1 / 19 / 17
5	ZBA Resubmittal	2 / 14 / 17
6	ZBA Resubmittal	3 / 29 / 17
7	ZBA Resubmittal	4 / 11 / 17
8	Modifications to Project Plans	10 / 26 / 17
9	Modifications to Project Plans	11 / 2 / 17

registration:

COMMONWEALTH OF MASSACHUSETTS
JAMES P. SHADLEY
No. 993
REGISTERED LANDSCAPE ARCHITECT

drawing name:

BUILDING 2
PLANTING PLAN

drawing number:

L-301

File Name: BW_L-300_000.dwg

COPYRIGHT (C) 2017 CUBE 3 STUDIO LLC, ALL RIGHTS RESERVED

CUBE 3
architecture interiors planning
360 Merrimack Street Lawrence MA 01843
phone: 978.989.9900 www.cube3studio.com

LEGEND

TAG	DESCRIPTION
1	WOODEN DECKING ON PEDESTALS
2	UNIT PAVERS ON PEDESTALS
3	5" THICK STAMPED / COLORED CONCRETE PAVEMENT ON PODIUM
4	TURF GRASS LAWN OVER PODIUM
5	5" THICK STAMPED / COLORED CONCRETE SLOPED WALK
6	PRECAST CONCRETE PLANTER WALL
7	PRECAST CONCRETE SEAT WALL
8	CONCRETE STAIRS WITH HAND RAILS
9	FIRE TABLES
10	BOLLARD LIGHTING
11	POOL WALL LIGHTING
12	OUTDOOR KITCHEN WITH SINTERED STONE PAVEMENT
13	WOODEN BENCH
14	WOODEN SWING
15	WOODEN CABANAS WITH SIDE PANELS AND FABRIC ROOFS
16	ADJUSTABLE ARM UMBRELLAS WITH CHAISE LOUNGE
17	ROUND LOUNGE CHAIRS WITH SHADES
18	DINING TABLES WITH UMBRELLAS
19	RAISED GARDEN AND HAMMOCK ROOM (± 24" ABOVE LOWER DECK AREA)
20	ARBOR @ HAMMOCK ROOM
21	GUNITE POOL WITH SUNDECK AND ACCESSIBLE CHAIR
22	PORTABLE PLANTERS
23	FLUSH PRECAST CONCRETE CURB
24	SHADE KITE SYSTEM
25	OUTDOOR BAR AND STOOLS
26	LOUNGE SEATING AT FIRE TABLES

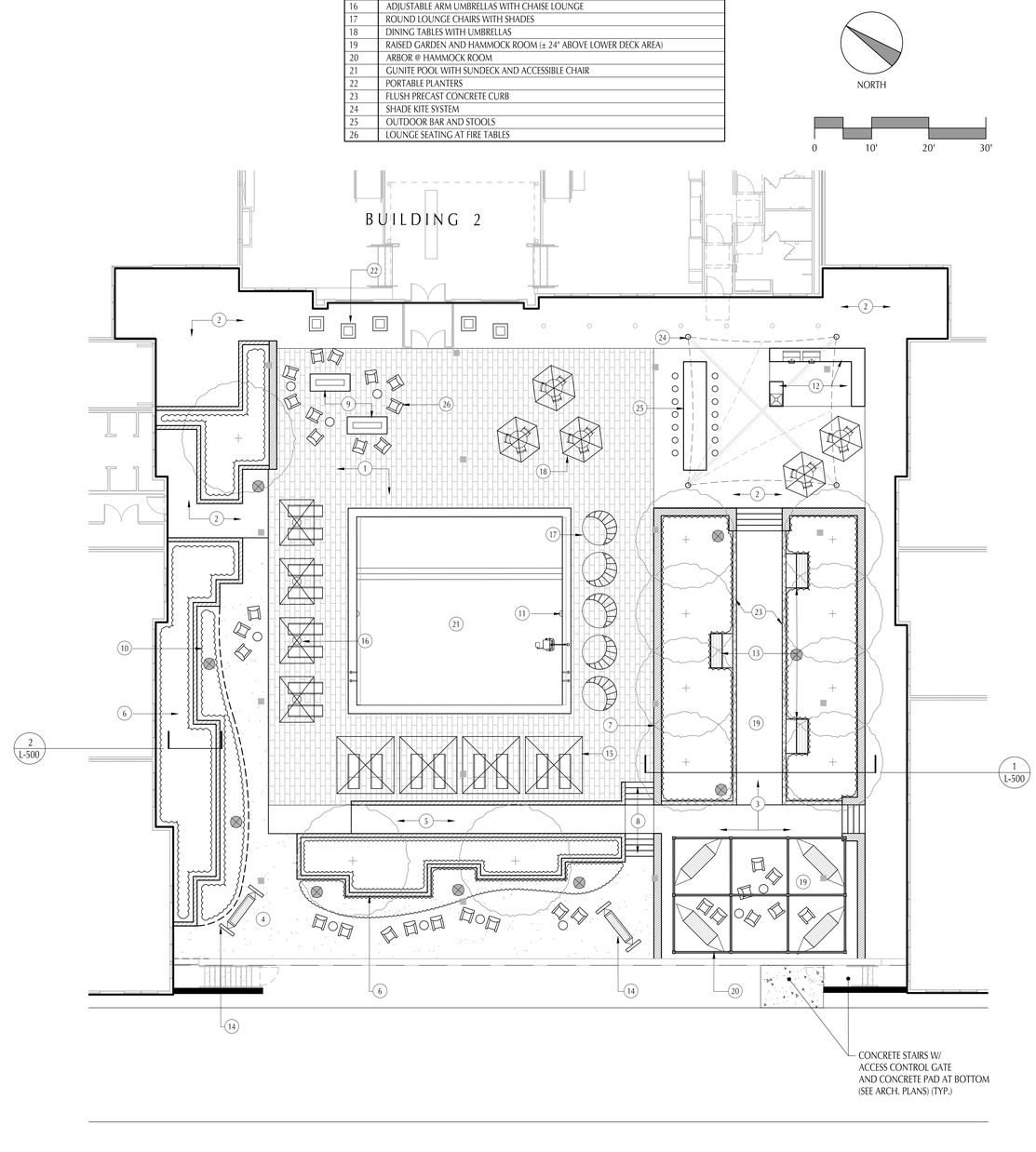

1 BUILDING 2 SOUTH COURTYARD LAYOUT, MATERIALS AND GRADING DETAIL

SCALE: 1" = 10'-0"

project information:

Broadstone Bare Cove

230 Beal Street,
Hingham, MA 02043

client information:

Broadstone Bare Cove Alliance, LLC.

C/O Alliance
Residential Company
184 High Street Suite
401 Boston, MA 02110

consultant information:

Shadley Associates
Landscape Architects / Site Planning Consultants
1730 Massachusetts Ave. • P 781.862.8809
Lexington, MA 02420 • F 781.862.2687
www.shadleyassociates.com

issuance:

COMPREHENSIVE PERMIT APPLICATION PLANS

NOT FOR CONSTRUCTION

key plan:

drawing information:

drawing by:	JPG / RS
drawing checked by:	JPS / JPG
drawing scale:	1" = 10'-0"
drawing date:	12 AUGUST 2016
project number:	15122.00 / 15062.0.00

drawing revisions:

No.	Description	Date
1	ZBA Resubmittal	10 / 25 / 16
2	ZBA Resubmittal	11 / 2 / 16
3	ZBA Resubmittal	1 / 4 / 17
4	ZBA Resubmittal	1 / 19 / 17
5	ZBA Resubmittal	2 / 14 / 17
6	ZBA Resubmittal	3 / 29 / 17
7	ZBA Resubmittal	4 / 11 / 17
8	Modifications to Project Plans	10 / 26 / 17
9	Modifications to Project Plans	11 / 2 / 17

registration:

drawing name:

BUILDING 2 SOUTH COURTYARD DETAILS

drawing number:

L-400

File Name: BBC_L-400_D0.dwg

COPYRIGHT (C) 2017 CUBE 3 STUDIO LLC, ALL RIGHTS RESERVED

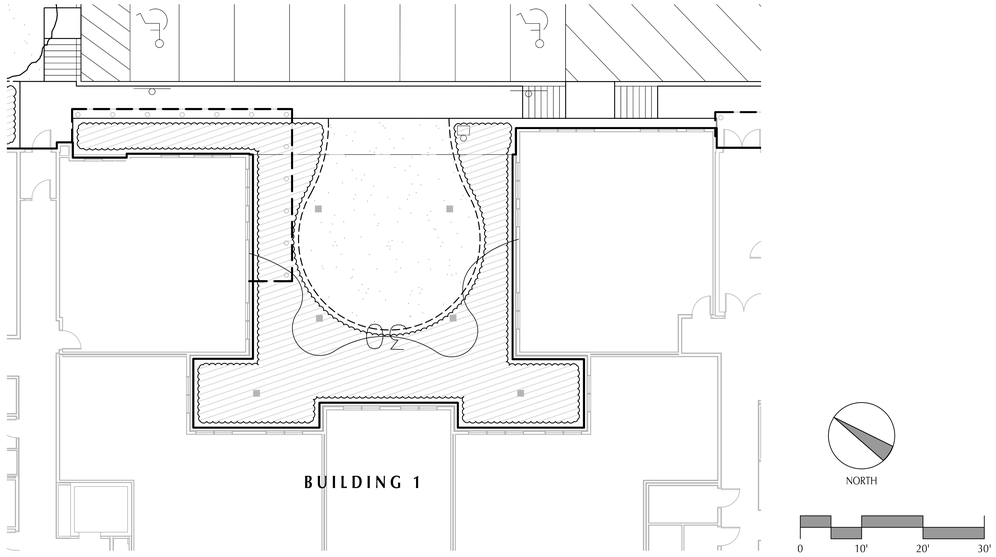

2 BUILDING 1 COURTYARD LAYOUT, MATERIALS AND GRADING DETAIL

SCALE: 1" = 10'-0"

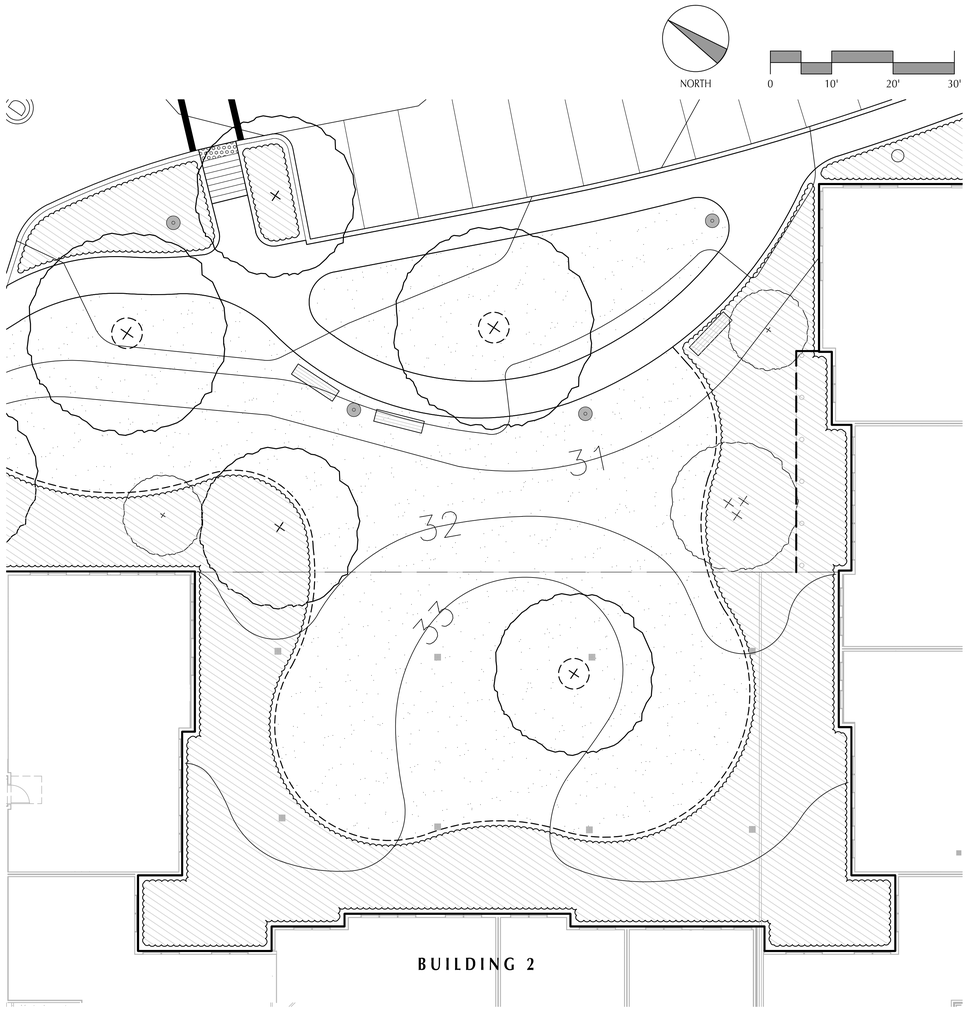

1 BUILDING 2 NORTH COURTYARD LAYOUT, MATERIALS AND GRADING DETAIL

SCALE: 1" = 10'-0"

CUBE 3
architecture interiors planning
360 Merrimack Street Lawrence MA 01843
phone: 978.989.9900 www.cube3studio.com

project information

Broadstone Bare Cove

230 Beal Street,
Hingham, MA 02043

client information

Broadstone Bare Cove Alliance, LLC.

C/O Alliance
Residential Company
184 High Street Suite
401 Boston, MA 02110

consultant information

Shadley Associates
Landscape Architects / Site Planning Consultants
1730 Massachusetts Ave. • P 781.862.8809
Lexington, MA 02420 • F 781.862.2687
www.shadleyassociates.com

issuance

COMPREHENSIVE PERMIT APPLICATION PLANS

NOT FOR CONSTRUCTION

key plan

drawing information

drawing by:	JPG / RS
drawing checked by:	JPS / JPG
drawing scale:	1" = 10'-0"
drawing date:	12 AUGUST 2016
project number:	15122.00 / 15062.0.00

drawing revisions:

No.	Description	Date
1	ZBA Resubmittal	10 / 25 / 16
2	ZBA Resubmittal	11 / 2 / 16
3	ZBA Resubmittal	1 / 4 / 17
4	ZBA Resubmittal	1 / 19 / 17
5	ZBA Resubmittal	2 / 14 / 17
6	ZBA Resubmittal	3 / 29 / 17
7	ZBA Resubmittal	4 / 11 / 17
8	Modifications to Project Plans	10 / 26 / 17
9	Modifications to Project Plans	11 / 2 / 17

registration

drawing name

AT-GRADE COURTYARD DETAILS

drawing number

L-401

File Name: BBC_L-400_D03.dwg

COPYRIGHT (C) 2017 CUBE 3 STUDIO LLC, ALL RIGHTS RESERVED

CUBE 3
architecture interiors planning
360 Merrimack Street Lawrence MA 01843
phone: 978.989.9900 www.cube3studio.com

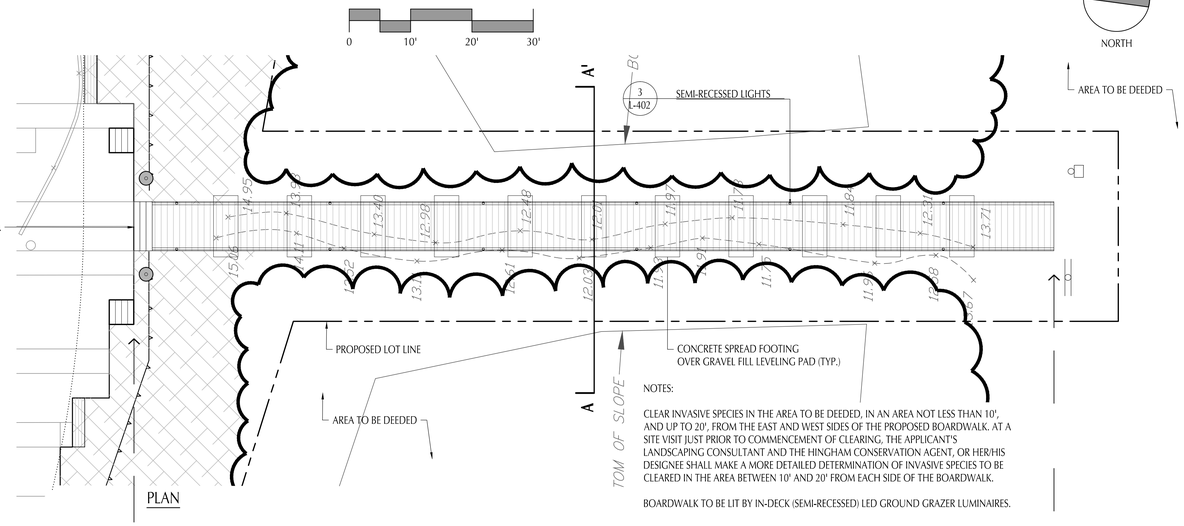

PLAN

NOTES:

CLEAR INVASIVE SPECIES IN THE AREA TO BE DEEDED, IN AN AREA NOT LESS THAN 10', AND UP TO 20', FROM THE EAST AND WEST SIDES OF THE PROPOSED BOARDWALK. AT A SITE VISIT JUST PRIOR TO COMMENCEMENT OF CLEARING, THE APPLICANT'S LANDSCAPING CONSULTANT AND THE HINGHAM CONSERVATION AGENT, OR HER/HIS DESIGNEE SHALL MAKE A MORE DETAILED DETERMINATION OF INVASIVE SPECIES TO BE CLEARED IN THE AREA BETWEEN 10' AND 20' FROM EACH SIDE OF THE BOARDWALK.

BOARDWALK TO BE LIT BY IN-DECK (SEMI-RECESSED) LED GROUND GRAZER LUMINAIRES.

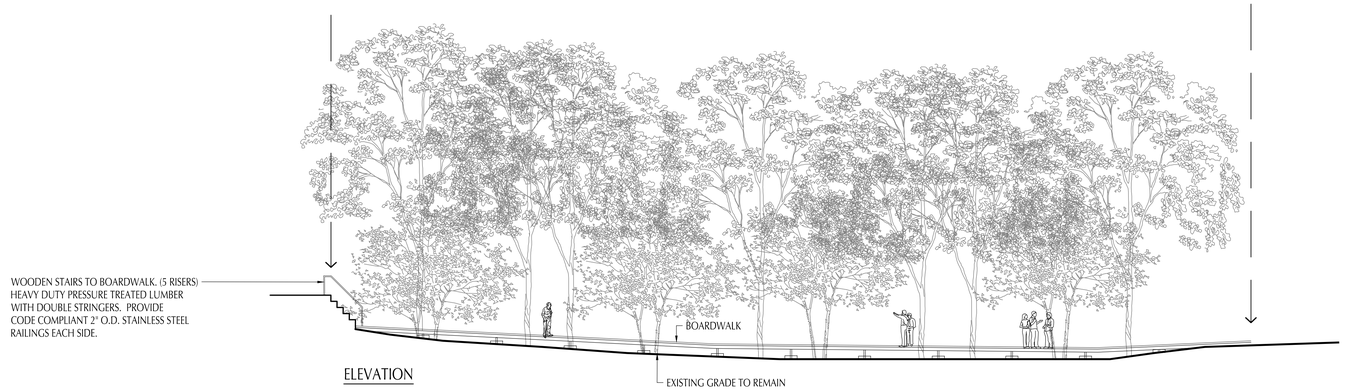

ELEVATION

2 BOARDWALK LAYOUT

SCALE: 1" = 10'

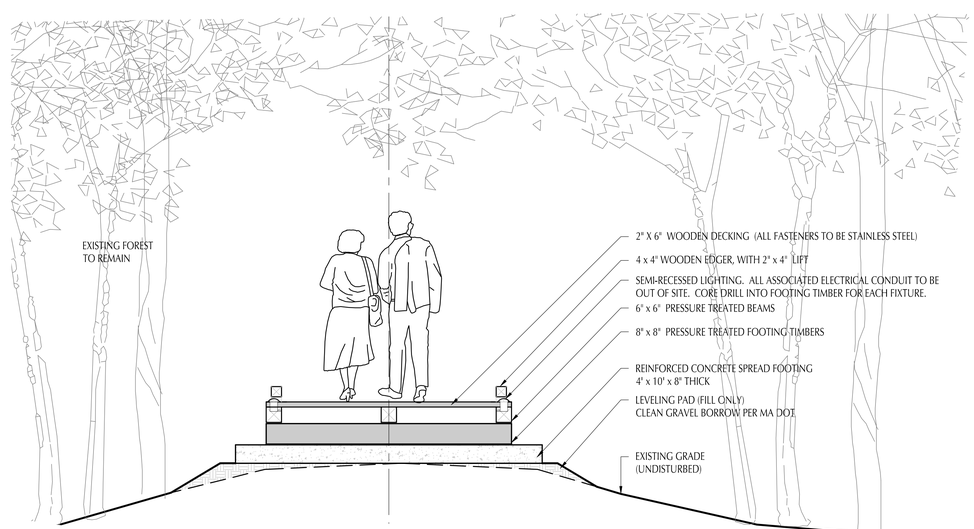

1 BOARDWALK SECTION A-A'

SCALE: 1/2" = 1'-0"

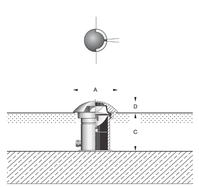

Dimensions

A: 4-3/4 "
B: 3-1/2 "
C: 3-3/4 "
D: 1-1/8 "

NOTES:
1. SUBMIT SHOP DRAWINGS FOR INSTALLATION INTO BOARDWALK.
2. REFERENCE MANUFACTURER'S INSTALLATION INSTRUCTIONS FOR RECOMMENDED HARDWARE AND MOUNTING PLATE DIMENSIONS

SEMI-RECESSED LIGHT FIXTURE

DESCRIPTION
MODEL 88 673 (SMALL SCALE)
LED SERIES
BY BEGA-US

FINISH
BLACK TEXTURED

INSTALL ACCORDING TO MANUFACTURER'S SPECIFICATIONS.

3 SEMI-RECESSED BOARDWALK LIGHTING (12 REQUIRED)

SCALE: 1/2" = 1'-0"

project information

Broadstone Bare Cove

230 Beal Street, Hingham, MA 02043

client information

Broadstone Bare Cove Alliance, LLC.

C/O Alliance Residential Company
184 High Street Suite 401 Boston, MA 02110

consultant information

Shadley Associates
Landscape Architects / Site Planning Consultants
1730 Massachusetts Ave. • P 781.862.8809
Lexington, MA 02420 • F 781.862.2687
www.shadleyassociates.com

issuance

COMPREHENSIVE PERMIT APPLICATION PLANS

NOT FOR CONSTRUCTION

key plan

drawing information

drawing by:	JPG / RS
drawing checked by:	JPS / JPG
drawing scale:	As Noted
drawing date:	12 AUGUST 2016
project number:	15122.00 / 15062.0.00

drawing revisions:

No.	Description	Date
1	ZBA Resubmittal	10 / 25 / 16
2	ZBA Resubmittal	11 / 2 / 16
3	ZBA Resubmittal	1 / 4 / 17
4	ZBA Resubmittal	1 / 19 / 17
5	ZBA Resubmittal	2 / 14 / 17
6	ZBA Resubmittal	3 / 29 / 17
7	ZBA Resubmittal	4 / 11 / 17
8	Modifications to Project Plans	10 / 26 / 17
9	Modifications to Project Plans	11 / 2 / 17

registration

drawing name

BOARDWALK DETAILS

drawing number

L-402

File Name: BBC_L-402_DD.dwg

COPYRIGHT (C) 2017 CUBE 3 STUDIO LLC, ALL RIGHTS RESERVED

CUBE 3
architecture interiors planning
360 Merrimack Street Lawrence MA 01843
phone: 978.989.9900 www.cube3studio.com

NOTES:
1. SUBMIT FULL SHOP DRAWINGS

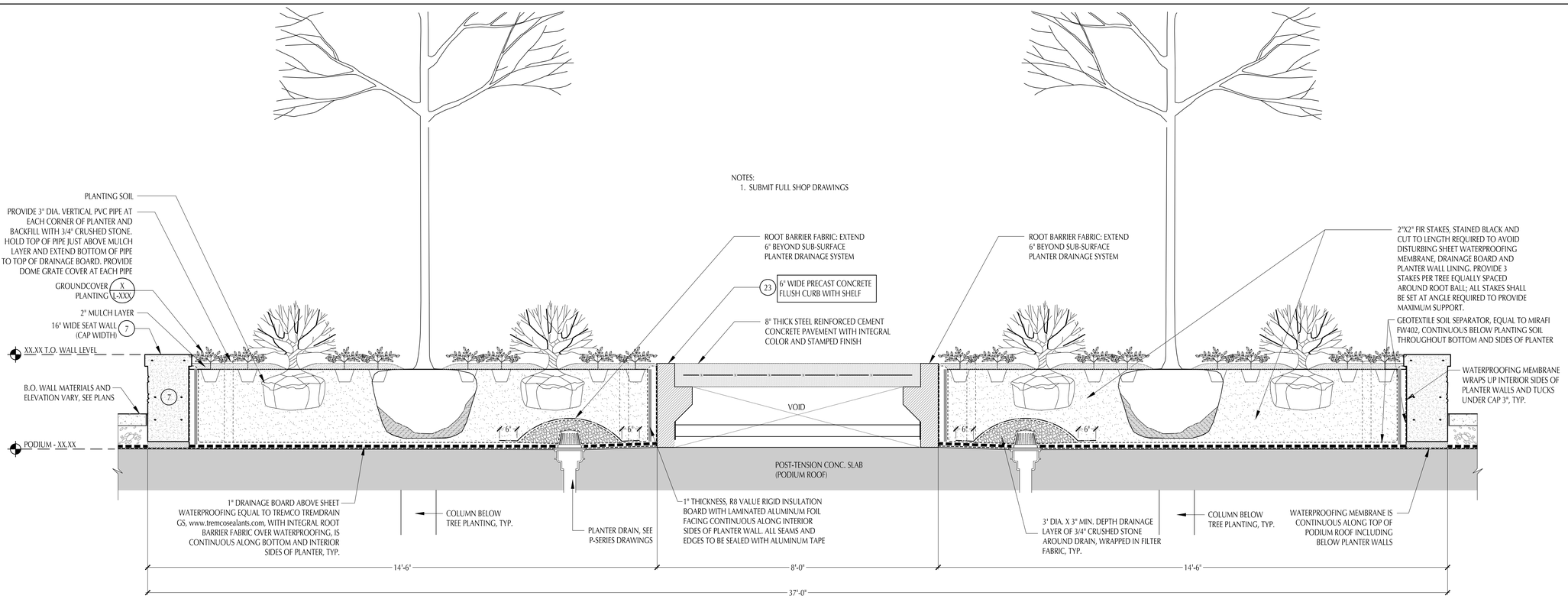

1 TYPICAL SEATWALL PLANTER CROSS-SECTION OVER PODIUM

SCALE: 3/4" = 1'-0"

NOTES:
1. SUBMIT FULL SHOP DRAWINGS

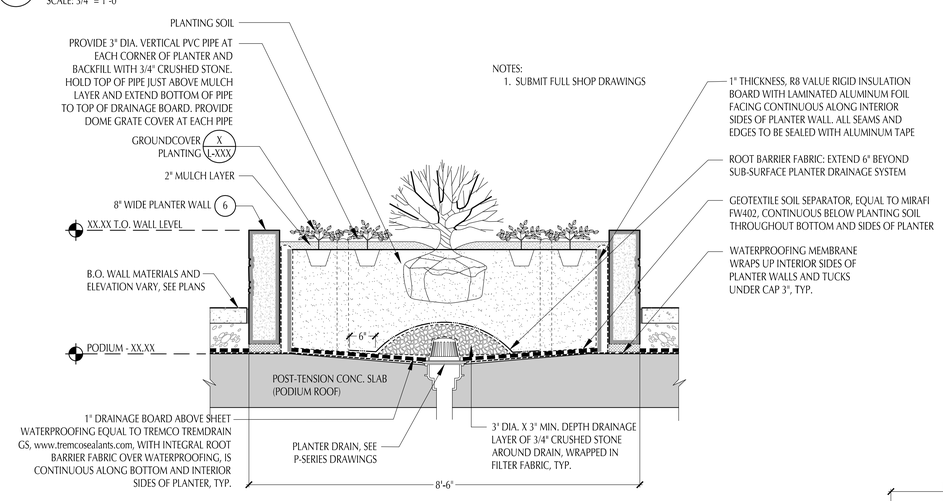

2 TYPICAL PLANTER WALL CROSS-SECTION OVER PODIUM

SCALE: 3/4" = 1'-0"

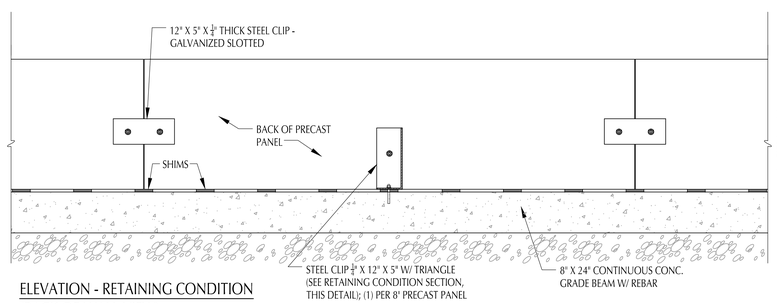

ELEVATION - RETAINING CONDITION (BACK OF WALL VIEW)

3 PRECAST CONCRETE WALL ON STRUCTURAL SLAB

SCALE: AS NOTED

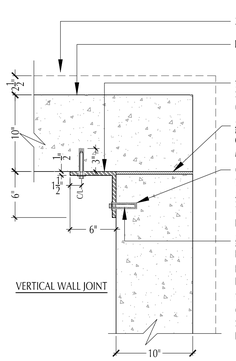

VERTICAL WALL JOINT

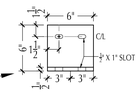

GALVANIZED STEEL ANGLE

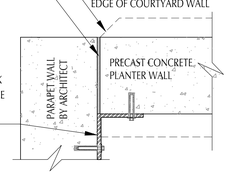

ATTACHMENT TO COURTYARD PARAPET WALL

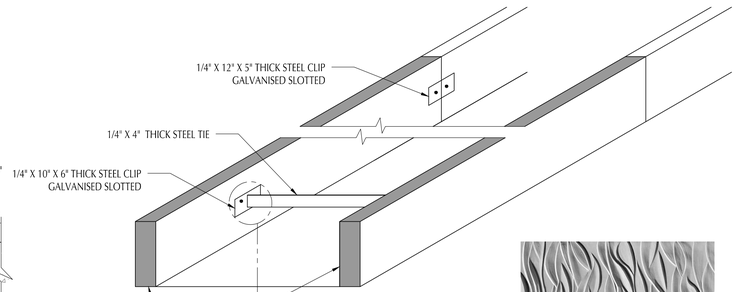

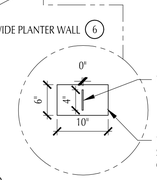

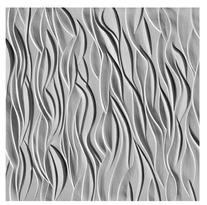

RECKLI
2/203 SAMARA

WALL FINISH

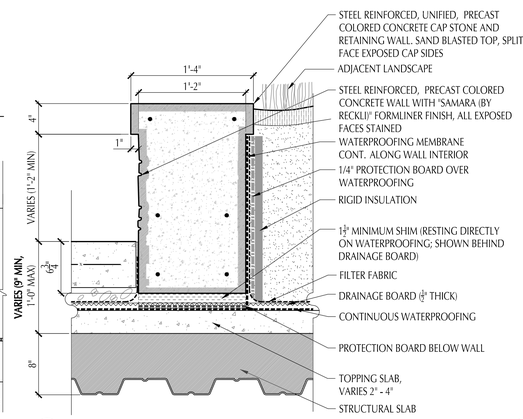

7 SEAT WALL

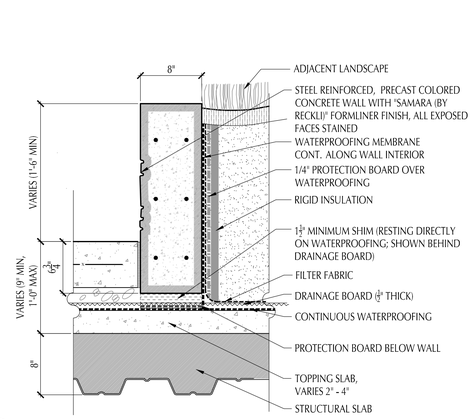

8 PLANTER WALL

LEGEND

TAG	DESCRIPTION
1	WOODEN DECKING ON PEDESTALS
2	UNIT PAVERS ON PEDESTALS
3	5" THICK STAMPED / COLORED CONCRETE PAVEMENT ON PODIUM
4	TURF GRASS LAWN OVER PODIUM
5	5" THICK STAMPED / COLORED CONCRETE SLOPED WALK
6	PRECAST CONCRETE PLANTER WALL
7	PRECAST CONCRETE SEAT WALL
8	CONCRETE STAIRS WITH HAND RAILS
9	FIRE TABLES
10	BOLLARD LIGHTING
11	POOL WALL LIGHTING
12	OUTDOOR KITCHEN WITH SINTERED STONE PAVEMENT
13	WOODEN BENCH
14	WOODEN SWING
15	WOODEN CABANAS WITH SIDE PANELS AND FABRIC ROOFS
16	ADJUSTABLE ARM UMBRELLAS WITH CHAISE LOUNGE
17	ROUND LOUNGE CHAIRS WITH SHADES
18	DINING TABLES WITH UMBRELLAS
19	RAISED GARDEN AND HAMMOCK ROOM (± 24" ABOVE LOWER DECK AREA)
20	ARBOR @ HAMMOCK ROOM
21	GUNITE POOL WITH SUNDECK AND ACCESSIBLE CHAIR
22	PORTABLE PLANTERS
23	FLUSH PRECAST CONCRETE CURB
24	SHADE KITE SYSTEM
25	OUTDOOR BAR AND STOOLS
26	LOUNGE SEATING AT FIRE TABLES

project information
Broadstone Bare Cove
230 Beal Street, Hingham, MA 02043

client information
Broadstone Bare Cove Alliance, LLC.
C/O Alliance Residential Company
184 High Street Suite 401 Boston, MA 02110

consultant information
Shadley Associates
Landscape Architects / Site Planning Consultants
1730 Massachusetts Ave. • P 781.862.8809
Lexington, MA 02420 • F 781.862.2687
www.shadleyassociates.com

issuance
COMPREHENSIVE PERMIT APPLICATION PLANS
NOT FOR CONSTRUCTION

key plan

drawing information

drawing by:	JPG / RS
drawing checked by:	JPS / JPG
drawing scale:	As Noted
drawing date:	12 AUGUST 2016
project number:	15122.00 / 15062.0.00

drawing revisions:

No.	Description	Date
1	ZBA Resubmittal	10 / 25 / 16
2	ZBA Resubmittal	11 / 2 / 16
3	ZBA Resubmittal	1 / 4 / 17
4	ZBA Resubmittal	1 / 19 / 17
5	ZBA Resubmittal	2 / 14 / 17
6	ZBA Resubmittal	3 / 29 / 17
7	ZBA Resubmittal	4 / 11 / 17
8	Modifications to Project Plans	10 / 26 / 17
9	Modifications to Project Plans	11 / 2 / 17

registration
MASSACHUSETTS JOSEPH P. SHADLEY JR. NO. 583 REGISTERED LANDSCAPE ARCHITECT

drawing name
SITE DETAILS

drawing number
L-500

File Name: BRC_L-500-2_2ZD.dwg

COPYRIGHT (C) 2017 CUBE 3 STUDIO LLC, ALL RIGHTS RESERVED

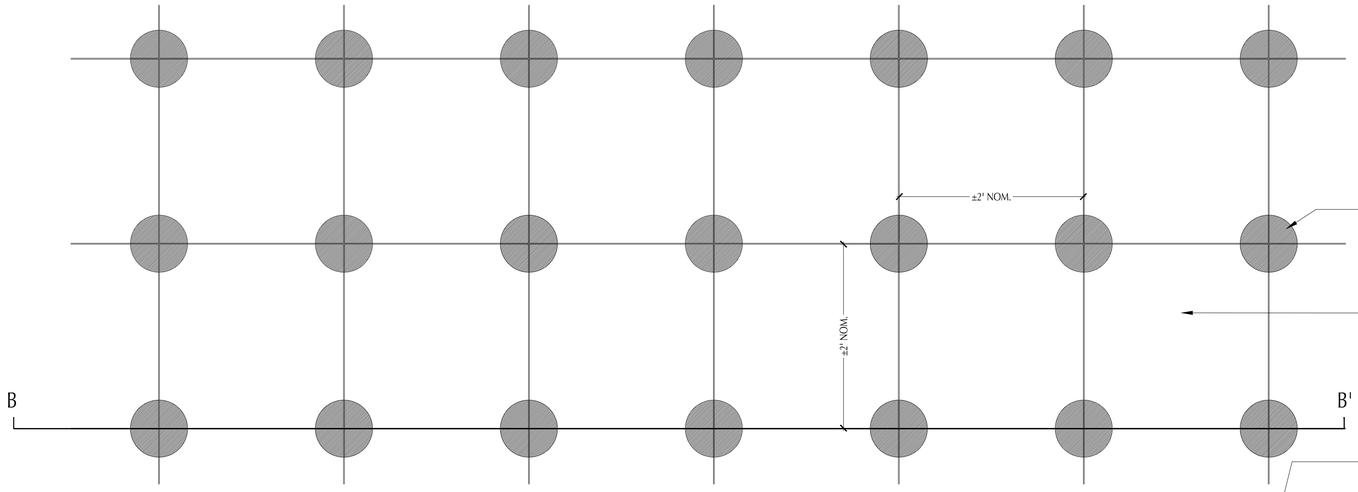

PRODUCT INFORMATION:
ROOFBLOK PEDESTAL PAVER SYSTEMS (http://www.roofblok.com/)
24" x 24" x 2" THICK PAVERS BY UNILOCK. (https://commercial.unilock.com/).

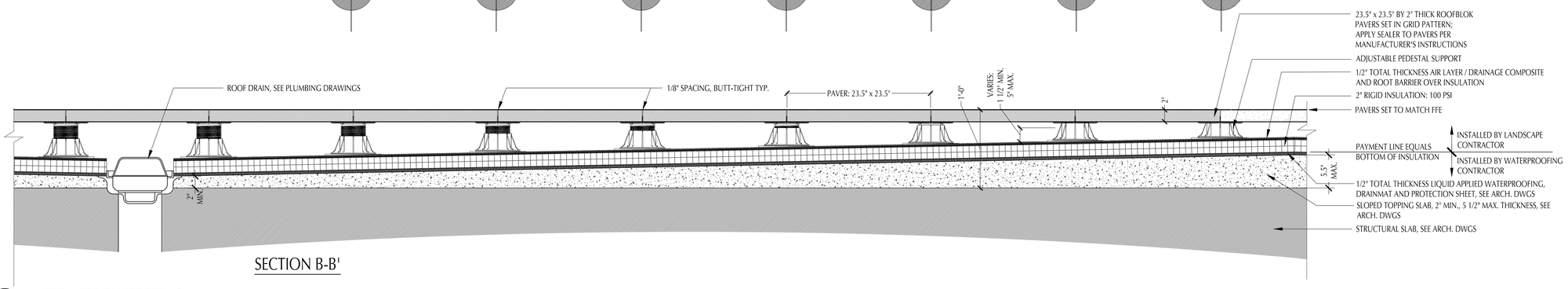

SECTION B-B'

2 UNIT PAVERS ON PEDESTALS

SCALE: 1 1/2" = 1'-0"

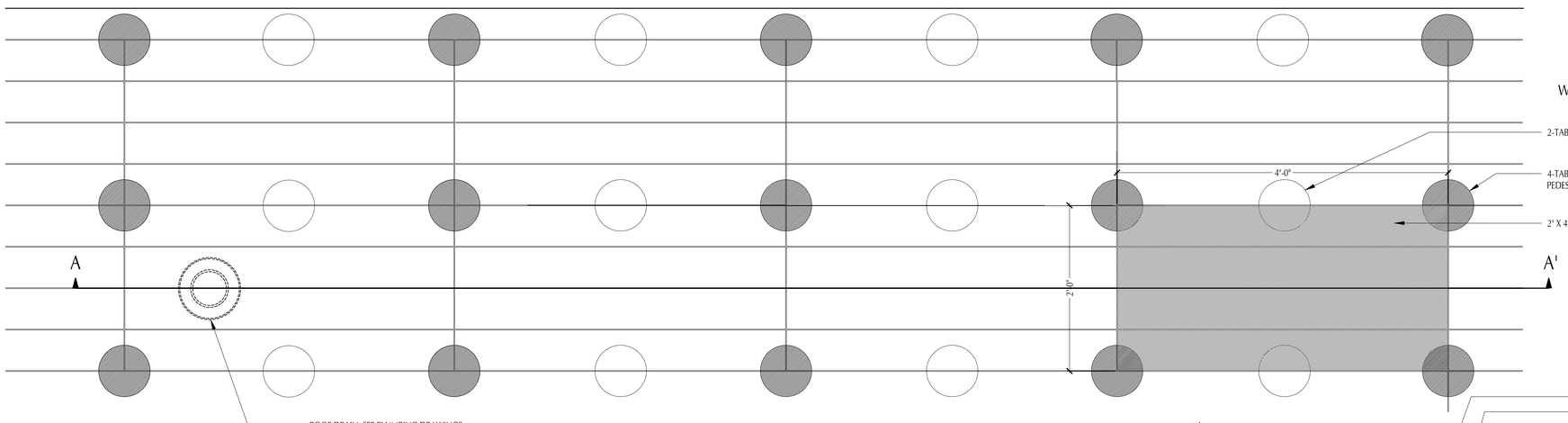

PRODUCT INFORMATION:
VERSADJUST WOODEN DECK TILE PEDESTAL SUPPORT SYSTEM
BY BISON INNOVATIVE PRODUCTS. (http://www.bisonip.com/)
WITH WT IPE 48 SMOOTH 7 DECK TILE ALSO BY BISON INNOVATIVE PRODUCTS.

PEDESTAL NOTE:
REQUIRED NUMBER OF 2-TABBED AND 4-TABBED PEDESTALS TO BE DETERMINED BASED ON PATTERN OF DECKING PANELS.

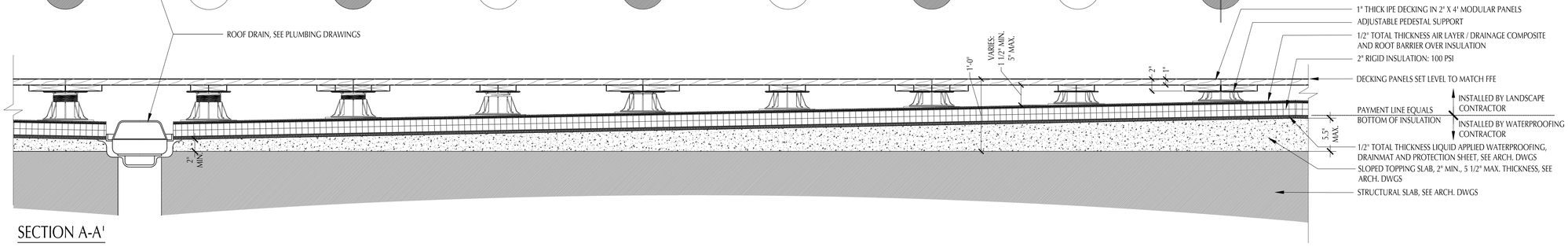

SECTION A-A'

1 WOODEN DECKING ON PEDESTALS

SCALE: 1 1/2" = 1'-0"

File Name: BBC_L-500-2_DD.dwg

CUBE 3
architecture interiors planning
360 Merrimack Street Lawrence MA 01843
phone: 978.989.9900 www.cube3studio.com

project information

Broadstone Bare Cove

230 Beal Street,
Hingham, MA 02043

client information

Broadstone Bare Cove Alliance, LLC.

C/O Alliance
Residential Company
184 High Street Suite
401 Boston, MA 02110

consultant information

Shadley Associates
Landscape Architects / Site Planning Consultants
1730 Massachusetts Ave. • P 781.862.8809
Lexington, MA 02420 • F 781.862.2687
www.shadleyassociates.com

issuance

COMPREHENSIVE PERMIT APPLICATION PLANS

NOT FOR CONSTRUCTION

key plan

drawing information

drawing by:	JPG / RS
drawing checked by:	JPS / JPG
drawing scale:	As Noted
drawing date:	12 AUGUST 2016
project number:	15122.00 / 15062.0.00

drawing revisions:

No.	Description	Date
1	ZBA Resubmittal	10 / 25 / 16
2	ZBA Resubmittal	11 / 2 / 16
3	ZBA Resubmittal	1 / 4 / 17
4	ZBA Resubmittal	1 / 19 / 17
5	ZBA Resubmittal	2 / 14 / 17
6	ZBA Resubmittal	3 / 29 / 17
7	ZBA Resubmittal	4 / 11 / 17
8	Modifications to Project Plans	10 / 26 / 17
9	Modifications to Project Plans	11 / 2 / 17

registration

drawing name

SITE DETAILS

drawing number

L-501

COPYRIGHT (C) 2017 CUBE 3 STUDIO LLC, ALL RIGHTS RESERVED

CUBE 3
architecture interiors planning
360 Merrimack Street Lawrence MA 01843
phone: 978.989.9900 www.cube3studio.com

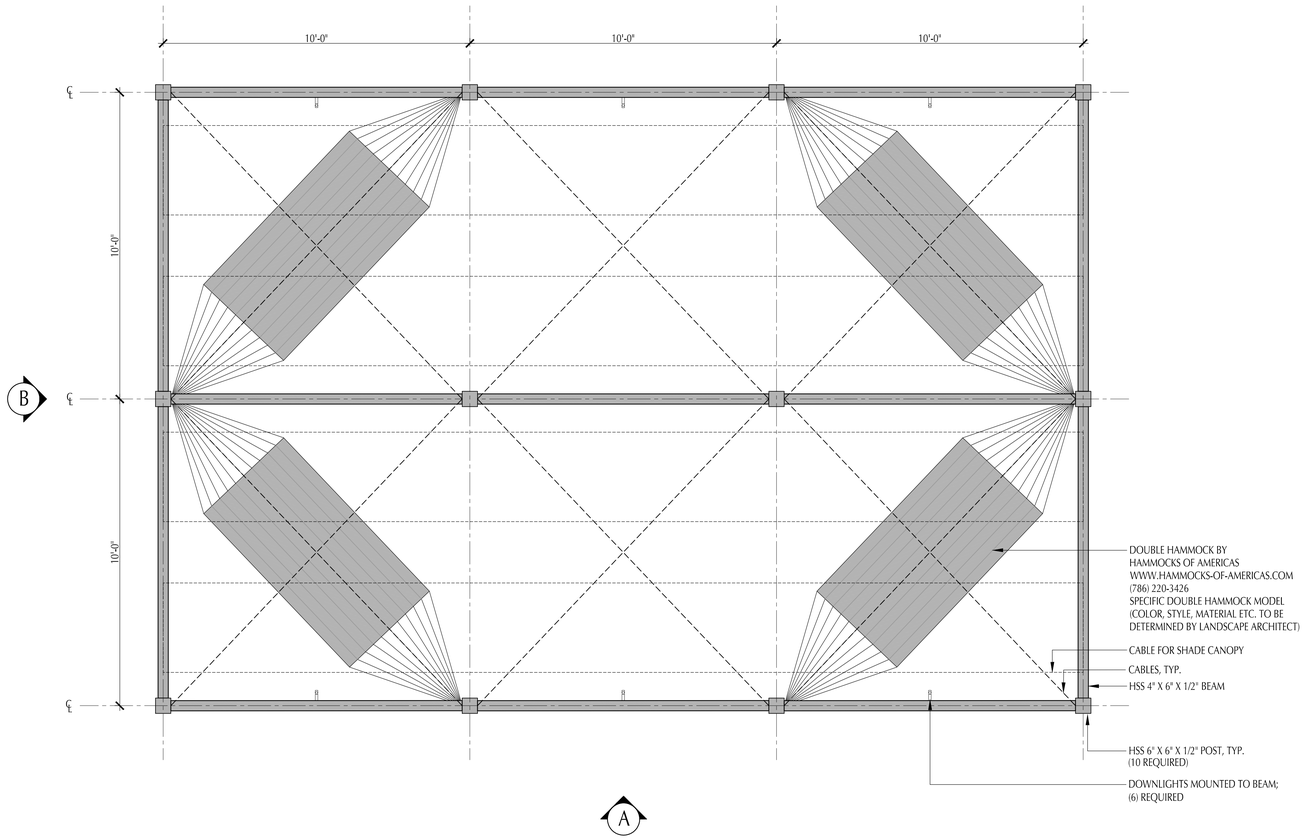

1 COURTYARD ARBOR PLAN

SCALE: 1/2" = 1'-0"

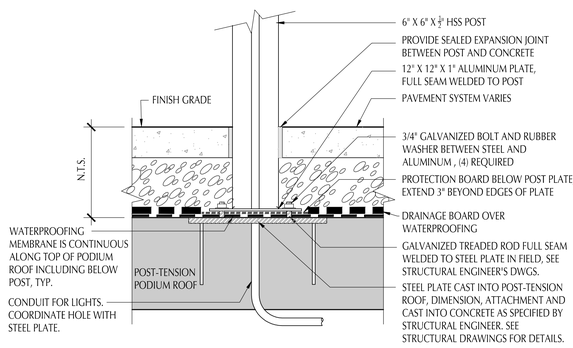

3 ARBOR ATTACHMENT TO STRUCTURAL SLAB

SCALE: 1 1/2" = 1'-0"

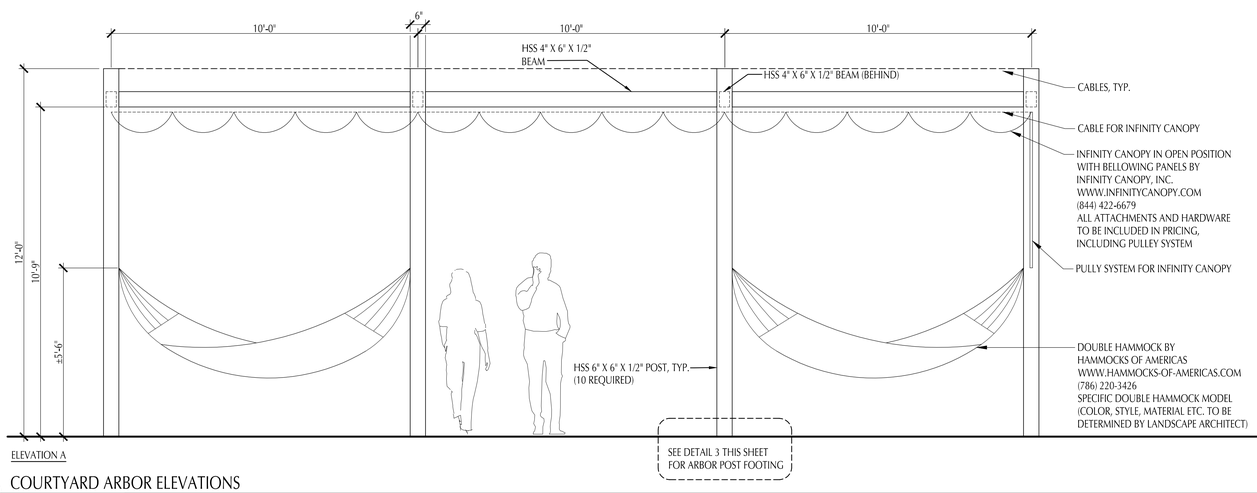

ELEVATION A

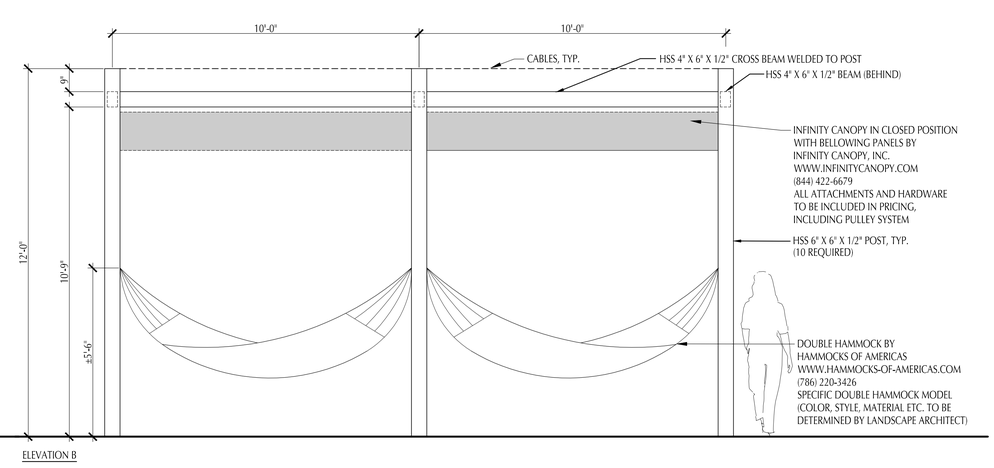

ELEVATION B

2 COURTYARD ARBOR ELEVATIONS

SCALE: 1/2" = 1'-0"

project information

Broadstone Bare Cove

230 Beal Street,
Hingham, MA 02043

client information

Broadstone Bare Cove Alliance, LLC.

C/O Alliance
Residential Company
184 High Street Suite
401 Boston, MA 02110

consultant information

Shadley Associates
Landscape Architects / Site Planning Consultants
1730 Massachusetts Ave. • P 781.862.8809
Lexington, MA 02420 • F 781.862.2687
www.shadleyassociates.com

issuance

COMPREHENSIVE
PERMIT
APPLICATION PLANS

NOT FOR
CONSTRUCTION

drawing information

drawing by:	JPG / RS
drawing checked by:	JPS / JPG
drawing scale:	As Noted
drawing date:	12 AUGUST 2016
project number:	15122.00 / 15062.0.00

drawing revisions:

No.	Description	Date
1	ZBA Resubmittal	10 / 25 / 16
2	ZBA Resubmittal	11 / 2 / 16
3	ZBA Resubmittal	1 / 4 / 17
4	ZBA Resubmittal	1 / 19 / 17
5	ZBA Resubmittal	2 / 14 / 17
6	ZBA Resubmittal	3 / 29 / 17
7	ZBA Resubmittal	4 / 11 / 17
8	Modifications to Project Plans	10 / 26 / 17
9	Modifications to Project Plans	11 / 2 / 17

registration

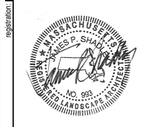

drawing name

ARBOR DETAILS

drawing number

L-502

File Name: BRC_L-500-2_ZPD.dwg

COPYRIGHT (C) 2017 CUBE 3 STUDIO LLC, ALL RIGHTS RESERVED

CUBE 3
architecture interiors planning
360 Merrimack Street Lawrence MA 01843
phone: 978.989.9900 www.cube3studio.com

DESCRIPTION
CAPITOL BIKE RACK
BY FORMS AND SURFACES
MODEL: SKCAP

CONTACT INFO
WEB: WWW.FORMS-SURFACES.COM

INSTALL PER MANUFACTURER'S SPECIFICATIONS

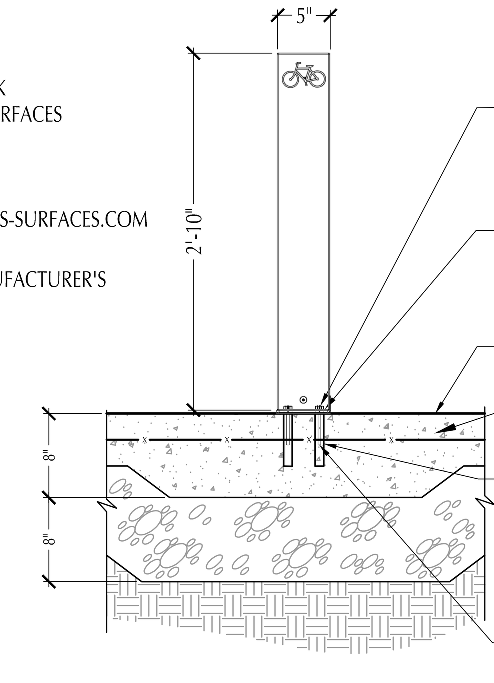

PROVIDE SHOP DRAWINGS

- BIKE RACK TO BE FASTENED TO CONCRETE AT PRE-MARKED ANCHORING HOLE, SEE MANUFACTURER'S RECOMMENDATIONS
- ATTACHMENT ASSEMBLY: SEE MANUFACTURER'S SPECIFICATIONS
- FINISHED GRADE
- CEMENT CONCRETE PAVEMENT, THICKEN BENEATH BENCH (X / XXX)
- CORE DRILL HOLE IN CONCRETE TO ACCEPT ANCHOR, FILL WITH NON-SHRINK EPOXY GROUT PER MANUFACTURER'S SPECIFICATIONS
- EPOXY ANCHOR, SEE MANUFACTURER'S SPECIFICATION.

8 BIKE RACK (13 REQUIRED)

SCALE: 1" = 1'-0"

PRODUCT INFORMATION:
DESCRIPTION: CONCRETE AND STAINLESS STEEL FIRE FEATURE
MANUFACTURER: PALOFORM
MODEL: ROBATA
DIMENSIONS: 24"W x 12.5"H x 72"L
COLOR: CONCRETE COLOR TO BE SELECTED BY LANDSCAPE ARCHITECT

BURNER: 80,000 BTU NATURAL GAS WITH ELECTRONIC IGNITION. BURNER TOPPING SHALL BE FIRE GLASS, COLOR TO BE SELECTED BY LANDSCAPE ARCHITECT

CONTACT INFO:
WEB: PALOFORM.COM
EMAIL: INFO@PALOFORM.COM
PHONE: 888.823.8883

NOTES:
1. PROVIDE TIMED SHUT-OFF SWITCH.
2. INSTALL AS REQUIRED BY MEP ENGINEER'S DRAWINGS AND MANUFACTURER'S SPECIFICATIONS.

4 FIRE FEATURE (2 REQUIRED)

SCALE: N.T.S.

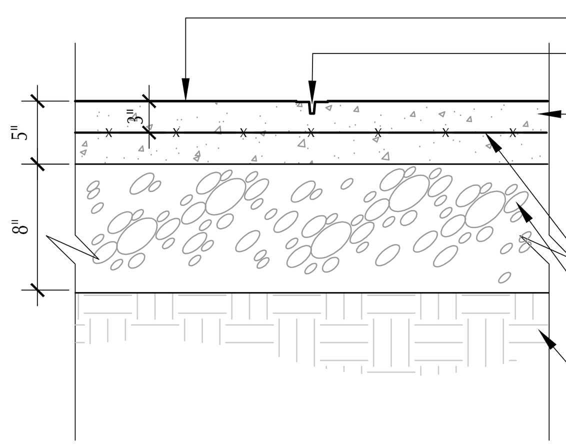

- FINISH GRADE
- SAWN CONTROL JOINT
- CAST-IN-PLACE CONCRETE SLAB WITH TEXTURE STAMP OR MEDIUM BROOM FINISH- DIRECTION OF FINISH TO BE PERPENDICULAR TO THE LONGITUDINAL DIRECTION OF PAVEMENT. SEE PLAN FOR CONCRETE COLOR.
- 6 X 6 W1.4 x W1.4 WWM REINFORCEMENT
- COMPACTED AGGREGATE BASE
- COMPACTED SUBGRADE

PROVIDE EXPANSION JOINTS 20' O.C. (TYP.)

10 COLORED STAMPED CONCRETE PAVEMENT

NOT TO SCALE

DESCRIPTION
KNIGHT BENCH, BACKED, 6-FT
BY FORMS AND SURFACES
MODEL: SBKNI-072B

CONTACT INFO
WEB: WWW.FORMS-SURFACES.COM

INSTALL PER MANUFACTURER'S SPECIFICATIONS

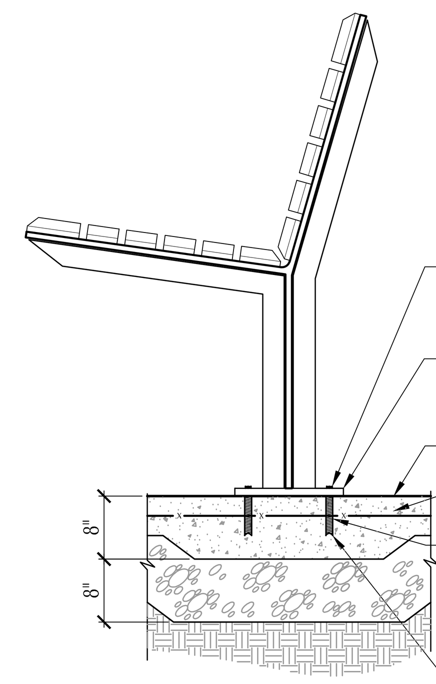

PROVIDE SHOP DRAWINGS

- BENCH TO BE FASTENED TO CONCRETE AT PRE-MARKED ANCHORING HOLE, SEE MANUFACTURER'S RECOMMENDATIONS
- ATTACHMENT ASSEMBLY: SEE MANUFACTURER SPECIFICATIONS
- FINISHED GRADE
- CEMENT CONCRETE PAVEMENT, THICKEN BENEATH BENCH (X / XXX)
- CORE DRILL HOLE IN CONCRETE TO ACCEPT ANCHOR, FILL WITH NON-SHRINK EPOXY GROUT PER MANUFACTURER'S SPECIFICATIONS
- EPOXY ANCHOR. SEE MANUFACTURER SPECIFICATION.

7 FREESTANDING BENCH (8 REQUIRED)

SCALE: 3/4" = 1'-0"

TYPE 1 (SQUARE): **5 REQUIRED**
24"L x 24"W x 27"H
FIBERGLASS REINFORCED PLASTIC (FRP) WITH T-I FINISH, COLOR TO BE SELECTED BY LANDSCAPE ARCHITECT. WITH MATCHING CWI CLASSIC (CWC) CONTAINER IRRIGATION INSERTS AS RECOMMENDED BY MANUFACTURER.

TYPE 2 (RECTANGULAR): **10 REQUIRED** (FOR AROUND POOL)
48"L x 18"W x 24"H
FIBERGLASS REINFORCED PLASTIC (FRP) WITH T-I FINISH, COLOR TO BE SELECTED BY LANDSCAPE ARCHITECT. WITH MATCHING CWI CLASSIC (CWC) CONTAINER IRRIGATION INSERTS AS RECOMMENDED BY MANUFACTURER.

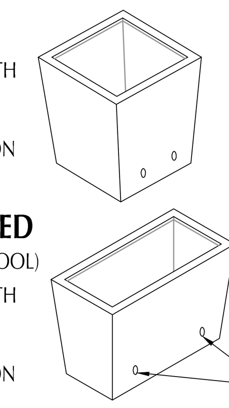

DESCRIPTION
URBAN COLLECTION PLANTERS
BY PLANTER TECHNOLGY / TOURNESOL SITEWORKS

CONTACT INFO
PHONE: 800.542.2282
WWW.TOURNESOLSITEWORKS.COM

PROVIDE DRILL HOLES FOR DRAINAGE

3 MOVABLE PLANTER

SCALE: N.T.S.

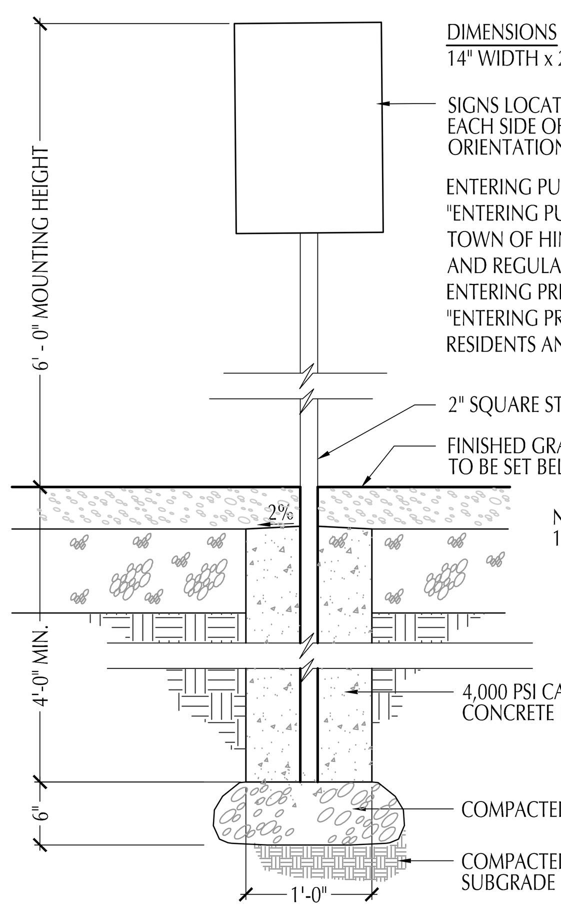

DIMENSIONS
14" WIDTH x 20" HEIGHT (80 ML THICKNESS)

- SIGNS LOCATED BACK-TO-BACK ON EACH SIDE OF POST (SEE PLANS FOR ORIENTATIONS)

ENTERING PUBLIC LAND SIGN:
"ENTERING PUBLIC PARK LAND SUBJECT TO TOWN OF HINGHAM OPEN SPACE RULES AND REGULATIONS"
ENTERING PRIVATE PROPERTY SIGN:
"ENTERING PRIVATE PROPERTY, RESIDENTS AND GUESTS PERMITTED ONLY"

- 2" SQUARE STEEL POST
- FINISHED GRADE, TOP OF FOOTING TO BE SET BELOW FINISHED GRADE

NOTES:
1. PROVIDE FULL SHOP DRAWINGS

- 4,000 PSI CAST IN PLACE CONCRETE FOOTING
- COMPACTED AGGREGATE BASE
- COMPACTED OR UNDISTURBED SUBGRADE

9 PUBLIC / PRIVATE PROPERTY ENTRY SIGNAGE

NOT TO SCALE

DESCRIPTION
KNIGHT LITTER RECEPTACLE
BY FORMS AND SURFACES
MODEL: SLKNI-30

CONTACT INFO
WWW.FORMS-SURFACES.COM

DIMENSIONS
21"SQ x 35.4""H

INSTALL PER MANUFACTURER'S SPECIFICATIONS

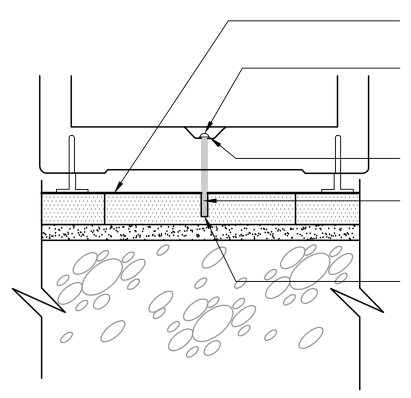

- FINISH GRADE, UNIT PAVERS (X / XXX)
- 3/8"-16 X 4" S.S. BUTTON HEAD CAP SCREW AS PROVIDED BY MANUFACTURER (1)
- 3/8" ID S.S. WASHER AS PROVIDED
- 3/8"-16 X 1 1/2" S.S. ANCHOR (1 PER RECEPTACLE) AS PROVIDED MY MANUFACTURER.
- CORE DRILL CONCRETE UNIT PAVER 1/2" Ø X 1 1/2" DEEP.
- INSTALL AS PER MANUFACTURER'S RECOMMENDATIONS. PROVIDE FULL SHOP DRAWINGS.

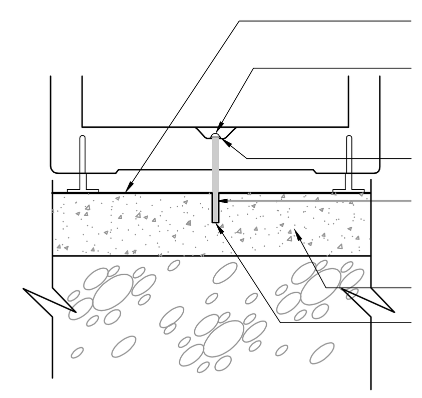

- FINISH GRADE
- 3/8"-16 X 4" S.S. BUTTON HEAD CAP SCREW AS PROVIDED BY MANUFACTURER (1)
- 3/8" ID S.S. WASHER AS PROVIDED
- 3/8"-16 X 1 1/2" S.S. ANCHOR (1 PER RECEPTACLE) AS PROVIDED MY MANUFACTURER.
- 5" CONCRETE PAVEMENT (X / XXX)
- CORE DRILL CONCRETE 1/2" Ø X 1 7/8" DEEP TO RECEIVE ANCHOR.
- INSTALL AS PER MANUFACTURER'S RECOMMENDATIONS. PROVIDE FULL SHOP DRAWINGS.

6 TRASH RECEPTACLE (3 REQUIRED)

SCALE: 1 1/2" = 1'-0"

DESCRIPTION
DOG VALET BY DOGIPOT
ITEM # 1001-2

CONTACT INFO DOGIPOT
PHONE: (800) 364-7681
FAX: (407) 888-8526
EMAIL: info@dogipot.com

DIMENSIONS
40.4" x 17" x 10"

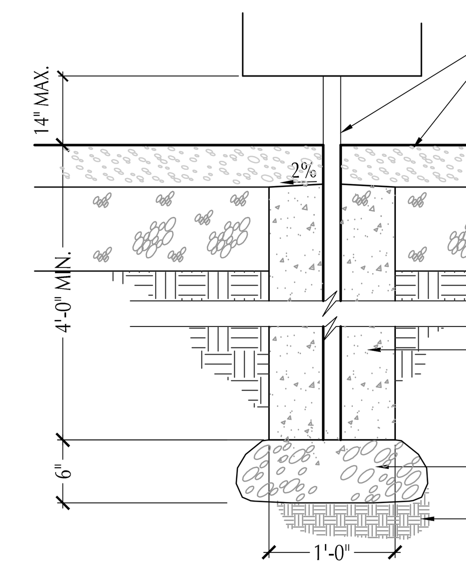

- DOG STATION POST
- FINISHED GRADE MATERIALS VARY, TOP OF FOOTING TO BE SET 4" BELOW FINISHED GRADE

NOTES:
1. PROVIDE FULL SHOP DRAWINGS
2. MOUNT NO HIGHER THAN 14" OFF FINISHED GRADE

- 4,000 PSI CAST IN PLACE CONCRETE FOOTING
- COMPACTED AGGREGATE BASE
- COMPACTED OR UNDISTURBED SUBGRADE

2 PET WASTE STATION (3 REQUIRED)

SCALE: N.T.S.

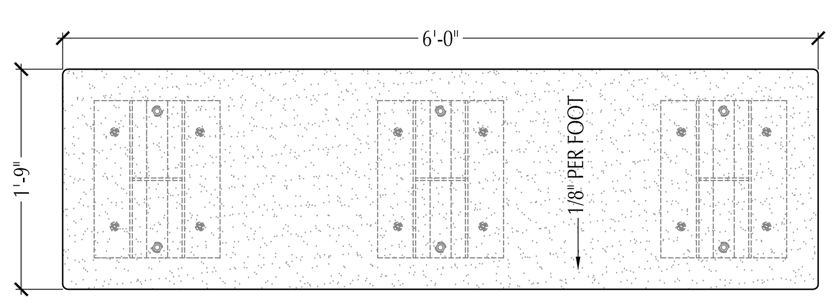

PLAN

NOTES:
1. GRANITE SHALL BE EQUAL TO CALEDONIA GRANITE: UNIFORM COLOR VARIATION OF DARK AND LIGHT GREY TONES WITH BLACK FLECKING. FOR FINISHES SEE BELOW.
2. METAL SUPPORT LEG SHALL BE A HOT-DIPPED GALVANIZED STEEL PLATE ASSEMBLY WITH FULL SEAM WELDED CONNECTIONS BETWEEN ALL PIECES.
3. FINISH OF GALV. STEEL SUPPORT LEGS SHALL BE POWDER-COATED COLOR TO MATCH WOOD BENCH LEGS.
4. ALL HARDWARE FOR ATTACHMENTS SHALL BE TYPE 316 STAINLESS STEEL.
5. PROVIDE FULL SHOP DRAWINGS FOR ALL COMPONENTS OF BENCH.

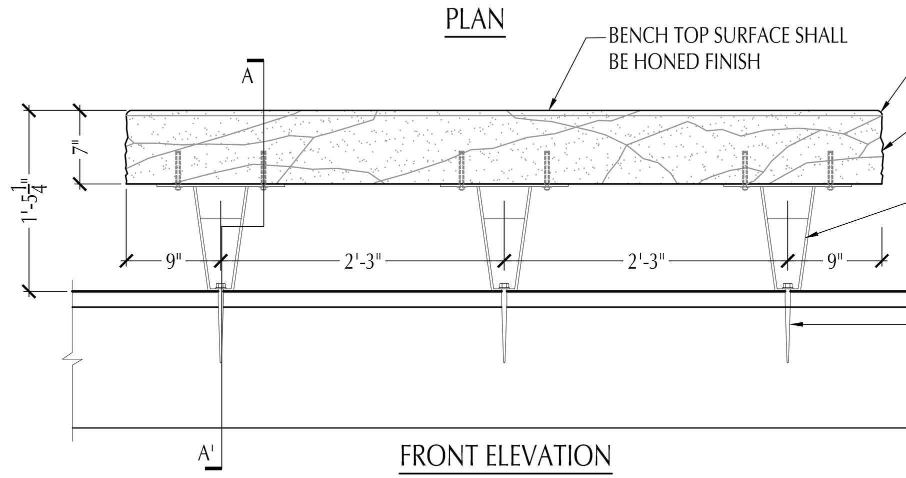

- BENCH TOP SURFACE SHALL BE HONED FINISH
- ROUNDED TOP EDGE SHALL BE THERMAL FINISH
- (4) VERTICAL SIDES SHALL BE SPLIT FACE FINISH
- 1/4" THICK GALV. STEEL PLATE LEG SUPPORT, 3 PER BENCH
- SS WOOD LAG SCREW ATTACHMENTS THROUGH DECKING INTO 6X12 BLOCKING, MIN. 6" DEPTH

FRONT ELEVATION

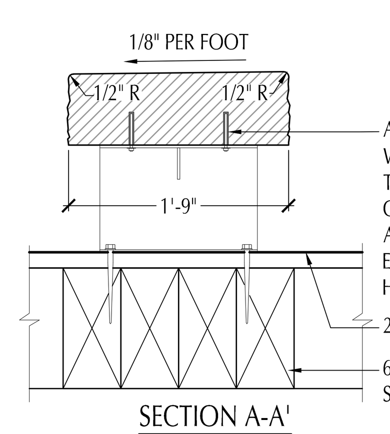

- ATTACH GRANITE TO LEGS WITH (4) 1/2" Ø X 5" LONG THREADED SS BOLTS SET IN CORE DRILL HOLE IN GRANITE AND SET WITH NON-SHRINK EPOXY GROUT. PROVIDE SS HEX HEAD NUT AND WASHER
- 2x6 WOOD BOARDWALK DECKING
- 6X12 BLOCKING BELOW BENCH, SEE STRUCTURAL ENGINEER'S DRAWINGS

SECTION A-A'

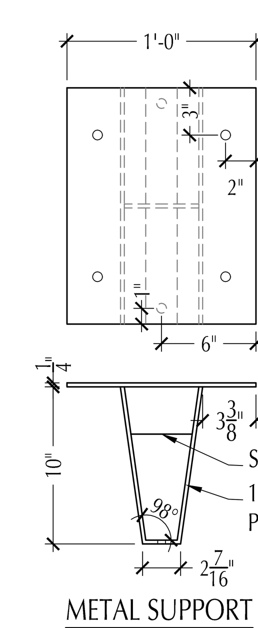

- STIFFENER PLATE
- 1/4" THICK STEEL PLATES, TYP.

METAL SUPPORT
SCALE: 1 1/2" = 1'-0"

5 BENCH @ BUILDING 2 PLAZA (8 REQUIRED)

SCALE: 1"=1'-0"

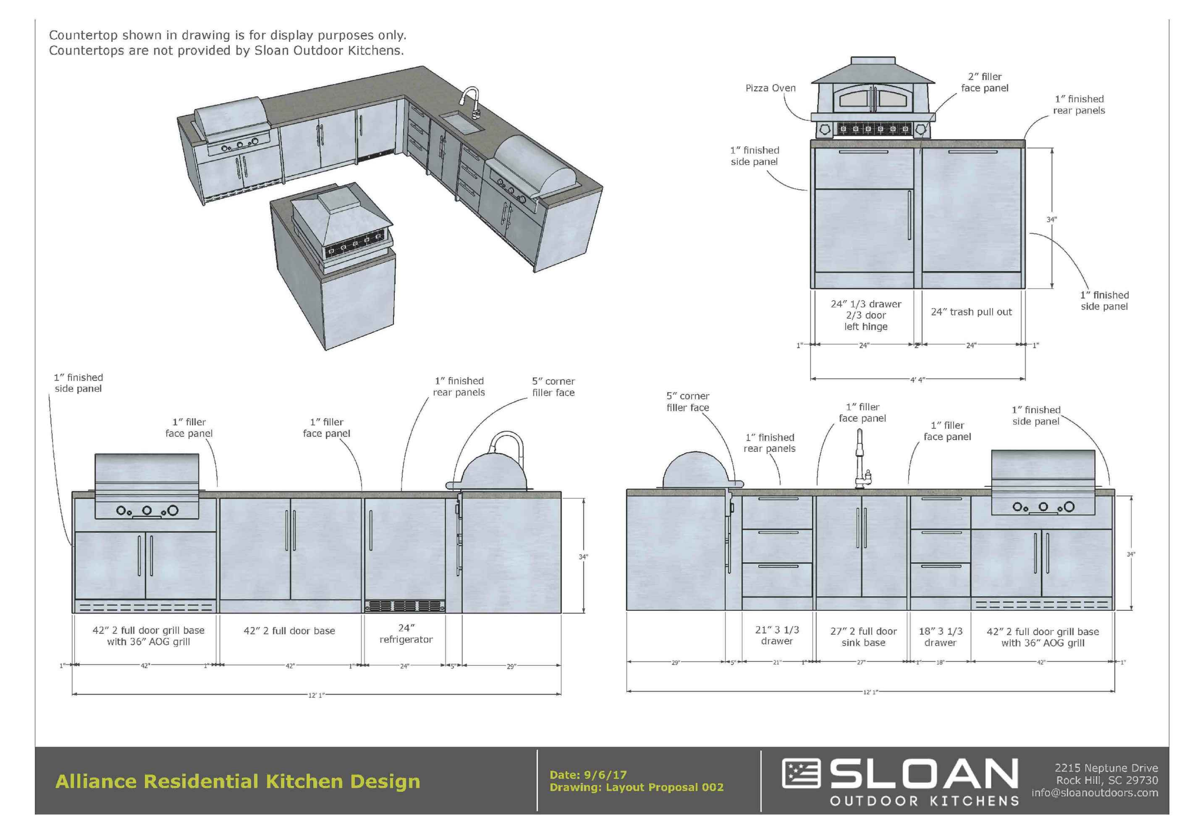

1 OUTDOOR KITCHEN @ BUILDING 2 COURTYARD

SCALE: N.T.S.

project information:
Broadstone Bare Cove
230 Beal Street, Hingham, MA 02043

client information:
Broadstone Bare Cove Alliance, LLC.
C/O Alliance Residential Company
184 High Street Suite 401 Boston, MA 02110

consultant information:
Shadley Associates
Landscape Architects / Site Planning Consultants
1730 Massachusetts Ave. • P 781.652.8809
Lexington, MA 02420 • F 781.862.2687
www.shadleyassociates.com

issuance:
COMPREHENSIVE PERMIT APPLICATION PLANS
NOT FOR CONSTRUCTION

key plan:

drawing information:

drawing by:	JPG / RS
drawing checked by:	JPS / JPG
drawing scale:	As Noted
drawing date:	12 AUGUST 2016
project number:	15122.00 / 15062.0.00

drawing revisions:

No.	Description	Date
1	ZBA Resubmittal	10 / 25 / 16
2	ZBA Resubmittal	11 / 2 / 16
3	ZBA Resubmittal	1 / 4 / 17
4	ZBA Resubmittal	1 / 19 / 17
5	ZBA Resubmittal	2 / 14 / 17
6	ZBA Resubmittal	3 / 29 / 17
7	ZBA Resubmittal	4 / 11 / 17
8	Modifications to Project Plans	10 / 26 / 17
9	Modifications to Project Plans	11 / 2 / 17

registration:

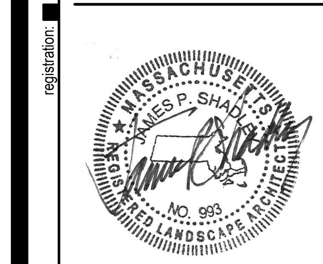

drawing name:
SITE DETAILS

drawing number:
L-503

File Name: BBC_L-503-6_DD.dwg

COPYRIGHT (C) 2017 CUBE 3 STUDIO LLC, ALL RIGHTS RESERVED

CUBE 3
architecture interiors planning
360 Merrimack Street Lawrence MA 01843
phone: 978.989.9900 www.cube3studio.com

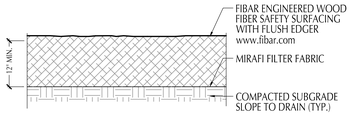

8 PLAYGROUND SAFETY SURFACING

SCALE: 3/4" = 1'-0"

NOTES:
1. SUBMIT SHOP DRAWINGS FOR ALL FOOTING CONDITIONS.
2. REFERENCE MANUFACTURER'S INSTALLATION INSTRUCTIONS FOR RECOMMENDED HARDWARE AND MOUNTING PLATE DIMENSIONS

PEDESTRIAN SCALE LIGHT FIXTURE

DESCRIPTION
MODEL 1760 CHATEAU (LARGE SCALE)
LED SERIES
BY STERNBERG LIGHTING

FINISH
BLACK TEXTURED

DIMENSIONS
16' POLE HEIGHT
32" FIXTURE HEIGHT

INSTALL ACCORDING TO MANUFACTURERS'S SPECIFICATIONS.

6 PARKING AREA LIGHT FIXTURE (11 REQUIRED)

NOT TO SCALE

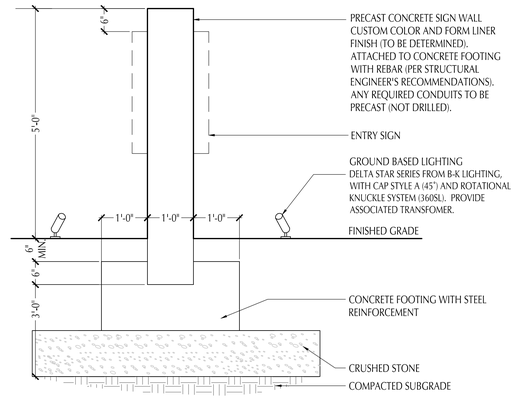

3 SECTION

3/4" = 1'-0"

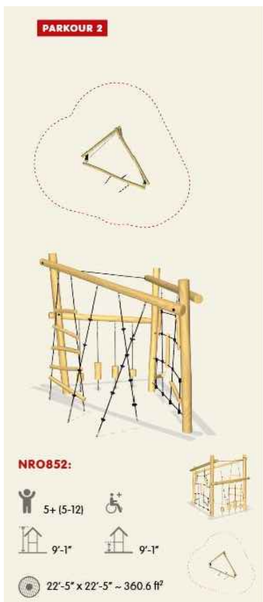

CLIMBING STRUCTURE PARKOUR 2
MODEL #: NR0852

BY KOMPAN
WWW. KOMPAN.US
(800) 426-9788

7 PLAYGROUND EQUIPMENT

SCALE: N.T.S.

NOTES:
1. SUBMIT SHOP DRAWINGS FOR ALL FOOTING CONDITIONS.
2. REFERENCE MANUFACTURER'S INSTALLATION INSTRUCTIONS FOR RECOMMENDED HARDWARE AND MOUNTING PLATE DIMENSIONS

PEDESTRIAN SCALE LIGHT FIXTURE

DESCRIPTION
MODEL 1740 CHATEAU (SMALL SCALE)
LED SERIES
BY STERNBERG LIGHTING

FINISH
BLACK TEXTURED

DIMENSIONS
12" POLE HEIGHT
20 3/4" FIXTURE HEIGHT

INSTALL ACCORDING TO MANUFACTURERS'S SPECIFICATIONS.

5 PEDESTRIAN SCALE LIGHT FIXTURE (22 REQUIRED)

NOT TO SCALE

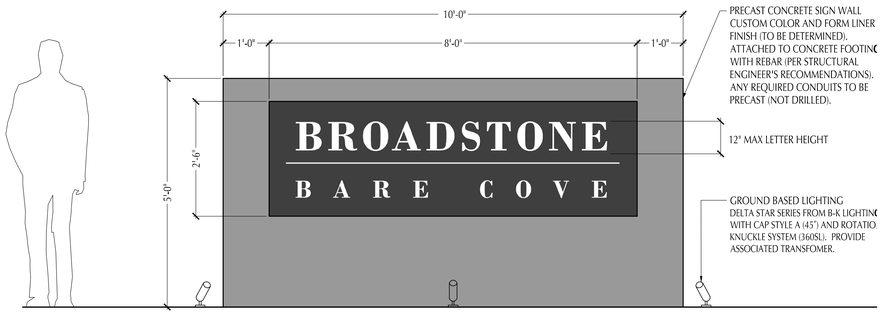

2 ELEVATION

SCALE: 3/4" = 1'-0"

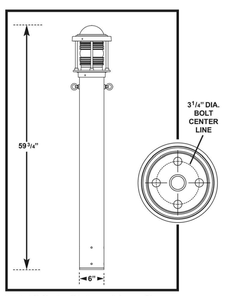

See installation template for exact door position.

NOTES:
1. SUBMIT SHOP DRAWINGS FOR ALL FOOTING CONDITIONS.
2. REFERENCE MANUFACTURER'S INSTALLATION INSTRUCTIONS FOR RECOMMENDED HARDWARE AND MOUNTING PLATE DIMENSIONS

BOLLARD LIGHT

DESCRIPTION
MODEL 806-346B HARBORTOWN
CYLINDRICAL BODY
LED SERIES
BY STERNBERG LIGHTING

FINISH
BLACK TEXTURED

DIMENSIONS
6" DIA. x 59 3/4" HEIGHT.

INSTALL ACCORDING TO MANUFACTURERS'S SPECIFICATIONS.

4 BOLLARD LIGHT (29 REQUIRED)

NOT TO SCALE

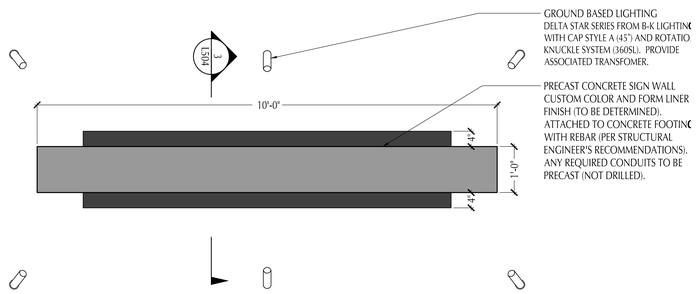

1 PLAN

SCALE: 3/4" = 1'-0"

project information

Broadstone Bare Cove

230 Beal Street,
Hingham, MA 02043

client information

Broadstone Bare Cove Alliance, LLC.

C/O Alliance
Residential Company
184 High Street Suite
401 Boston, MA 02110

consultant information

Shadley Associates
Landscape Architects / Site Planning Consultants
1730 Massachusetts Ave. • P 781.862.8809
Lexington, MA 02420 • F 781.862.2687
www.shadleyassociates.com

issuance

COMPREHENSIVE PERMIT APPLICATION PLANS

NOT FOR CONSTRUCTION

key plan

drawing information

drawing by:	JPG / RS
drawing checked by:	JPS / JPG
drawing scale:	As Noted
drawing date:	12 AUGUST 2016
project number:	15122.00 / 15062.0.00

drawing revisions:

No.	Description	Date
1	ZBA Resubmittal	10 / 25 / 16
2	ZBA Resubmittal	11 / 2 / 16
3	ZBA Resubmittal	1 / 4 / 17
4	ZBA Resubmittal	1 / 19 / 17
5	ZBA Resubmittal	2 / 14 / 17
6	ZBA Resubmittal	3 / 29 / 17
7	ZBA Resubmittal	4 / 11 / 17
8	Modifications to Project Plans	10 / 26 / 17
9	Modifications to Project Plans	11 / 2 / 17

registration

drawing name

SITE DETAILS

drawing number

L-504

COPYRIGHT (C) 2017 CUBE 3 STUDIO LLC, ALL RIGHTS RESERVED

File Name: BR_L-504_DD.dwg

CUBE 3
architecture interiors planning
360 Merrimack Street Lawrence MA 01843
phone: 978.989.9900 www.cube3studio.com

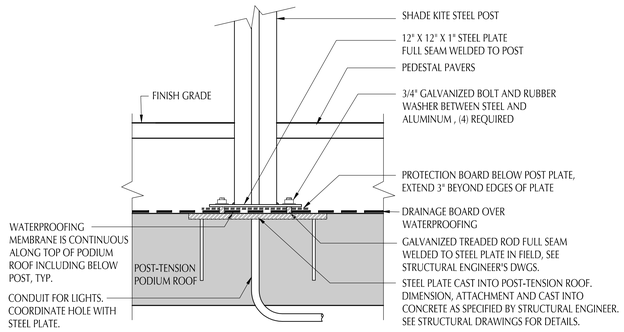

3 SHADE KITE POLE ATTACHMENT DETAIL

SCALE: N.T.S.

PRODUCT INFORMATION:

SHADE KITE BY SHADE SYSTEMS shadesystemsinc.com
26' x 26' SQUARE KITE; 10' TO 18' HEIGHT EAVES - PROVIDE 4 POLES AND ALL ATTACHMENT HARDWARE. COLORS TO BE SELECTED BY OWNER. ANY BUILDING ATTACHMENT REQUIRED TO BE SPECIFIED BY ARCHITECT.

M.E. O'BRIEN & SONS INC.
www.obrienandsons.com

2 SHADE KITE SYSTEM (1 REQUIRED)

SCALE: N.T.S.

PRODUCT INFORMATION:

POTTERY BARN
MADERA TEAK DAYBED
DOUBLE CHAISE WITH CANOPY
NATURAL COLOR
7'-4½" LONG X 6'-4½" WIDE X 7'-8" TALL

1 CABANA DETAIL (4 REQUIRED)

SCALE: N.T.S.

project information:

Broadstone Bare Cove

230 Beal Street,
Hingham, MA 02043

client information:

Broadstone Bare Cove Alliance, LLC.

C/O Alliance
Residential Company
184 High Street Suite
401 Boston, MA 02110

consultant information:

Shadley Associates
Landscape Architects / Site Planning Consultants
1730 Massachusetts Ave. • P 781.652.8809
Lexington, MA 02420 • F 781.862.2667
www.shadleyassociates.com

issuance:

COMPREHENSIVE PERMIT APPLICATION PLANS

NOT FOR CONSTRUCTION

key plan:

drawing information:

drawing by:	JPG / RS
drawing checked by:	JPS / JPG
drawing scale:	As Noted
drawing date:	12 AUGUST 2016
project number:	15122.00 / 15062.0.00

drawing revisions:

No.	Description	Date
1	ZBA Resubmittal	10 / 25 / 16
2	ZBA Resubmittal	11 / 2 / 16
3	ZBA Resubmittal	1 / 4 / 17
4	ZBA Resubmittal	1 / 19 / 17
5	ZBA Resubmittal	2 / 14 / 17
6	ZBA Resubmittal	3 / 29 / 17
7	ZBA Resubmittal	4 / 11 / 17
8	Modifications to Project Plans	10 / 26 / 17
9	Modifications to Project Plans	11 / 2 / 17

registration:

drawing name:

SITE DETAILS

drawing number:

L-505

File Name: BBC_L-503-4_DD.dwg

COPYRIGHT (C) 2017 CUBE 3 STUDIO LLC, ALL RIGHTS RESERVED

CUBE 3
architecture interiors planning
360 Merrimack Street Lawrence MA 01843
phone: 978.989.9900 www.cube3studio.com

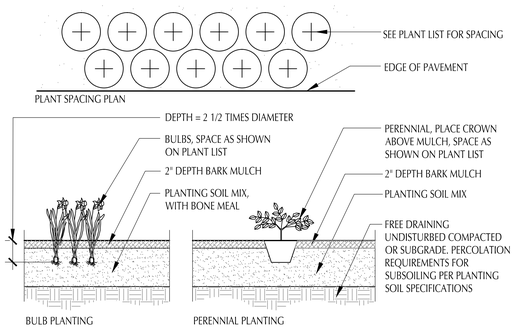

3 PERENNIAL & BULB PLANTING

SCALE: NTS

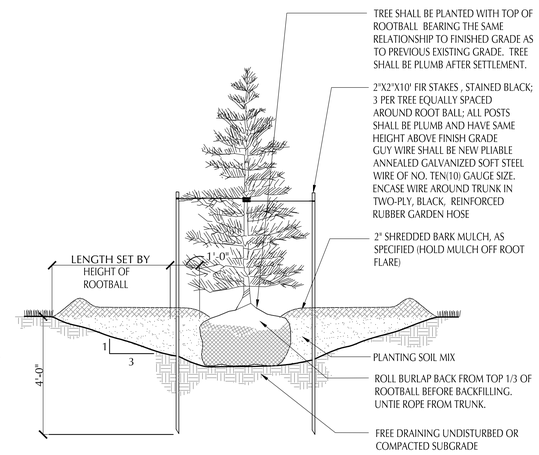

1 EVERGREEN TREE IN LAWN & PLANT BEDS

SCALE: NTS

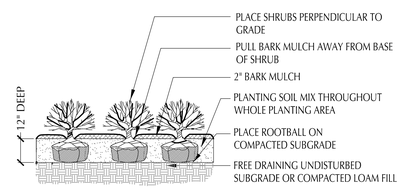

4 SHRUB PLANTING

SCALE: NTS

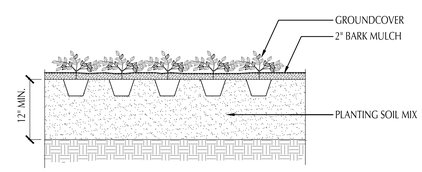

5 GROUNDCOVER PLANTING

SCALE: NTS

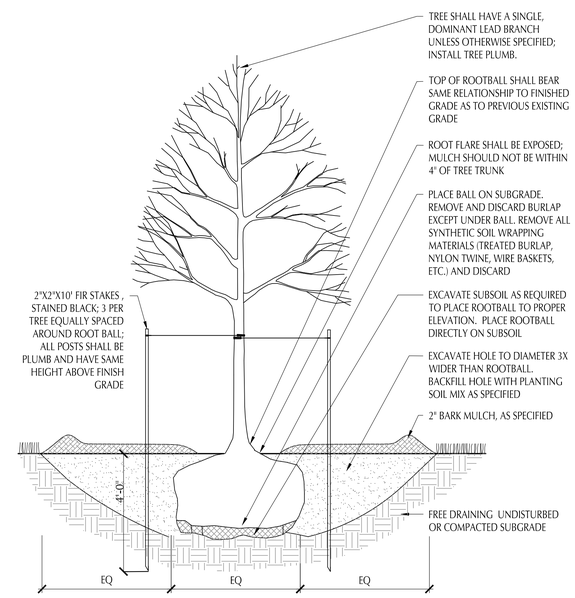

2 DECIDUOUS SHADE TREE PLANTING IN LAWN & PLANT BEDS

SCALE: NTS

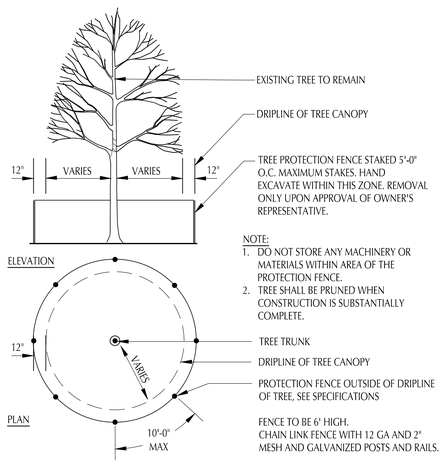

7 TREE PROTECTION DETAIL

SCALE: NOT TO SCALE

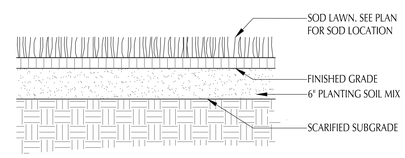

6 SOD LAWN

SCALE: NTS

project information

Broadstone Bare Cove

230 Beal Street, Hingham, MA 02043

client information

Broadstone Bare Cove Alliance, LLC.

C/O Alliance Residential Company
184 High Street Suite 401 Boston, MA 02110

consultant information

Shadley Associates
Landscape Architects / Site Planning Consultants
1730 Massachusetts Ave. • P 781.862.8809
Lexington, MA 02420 • F 781.862.2687
www.shadleyassociates.com

issuance

COMPREHENSIVE PERMIT APPLICATION PLANS

NOT FOR CONSTRUCTION

key plan

drawing information

drawing by:	JPG / RS
drawing checked by:	JPS / JPG
drawing scale:	As Noted
drawing date:	12 AUGUST 2016
project number:	15122.00 / 15062.0.00

drawing revisions:

No.	Description	Date
1	ZBA Resubmittal	10 / 25 / 16
2	ZBA Resubmittal	11 / 2 / 16
3	ZBA Resubmittal	1 / 4 / 17
4	ZBA Resubmittal	1 / 19 / 17
5	ZBA Resubmittal	2 / 14 / 17
6	ZBA Resubmittal	3 / 29 / 17
7	ZBA Resubmittal	4 / 11 / 17
8	Modifications to Project Plans	10 / 26 / 17
9	Modifications to Project Plans	11 / 2 / 17

registration

drawing name

PLANTING DETAILS

drawing number

L-506

File Name: BIG_L-0114_000.dwg

COPYRIGHT (C) 2017 CUBE 3 STUDIO LLC, ALL RIGHTS RESERVED

GROUP 2 & HEARING IMPAIRED UNIT LOCATIONS

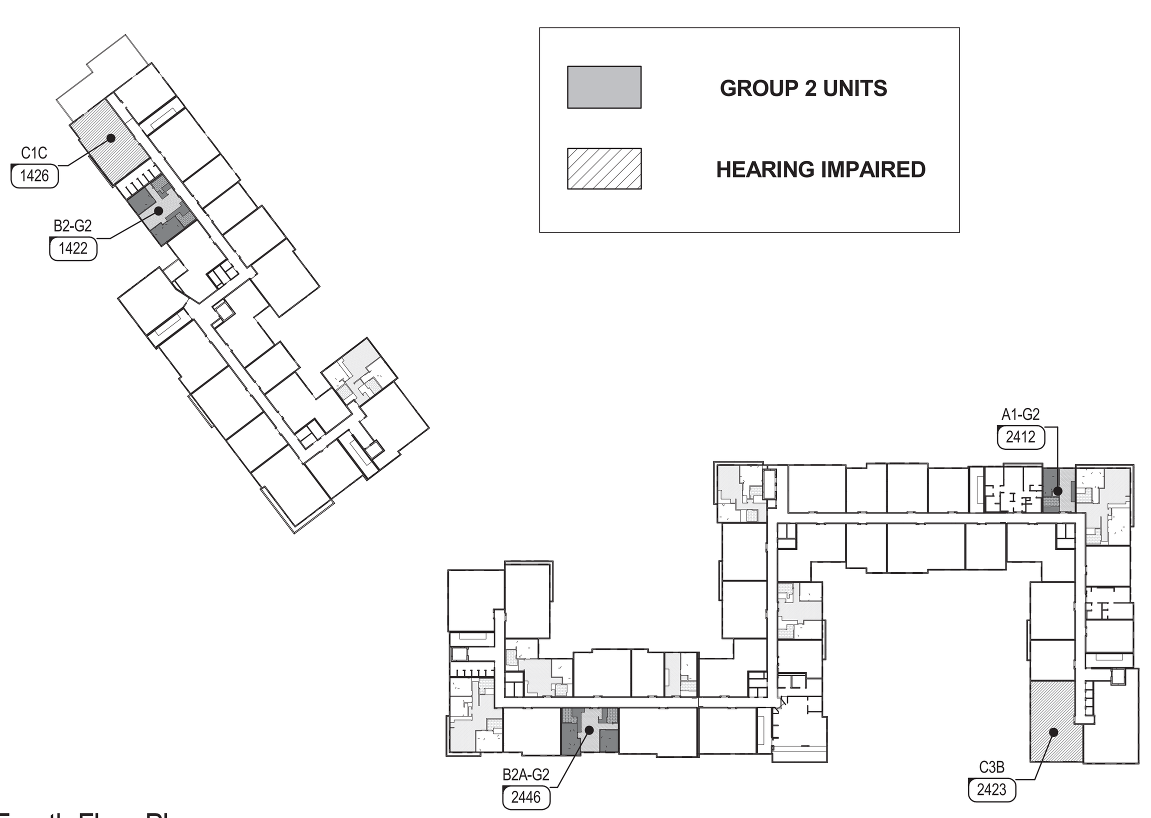

Fourth Floor Plan
1" = 80'-0"

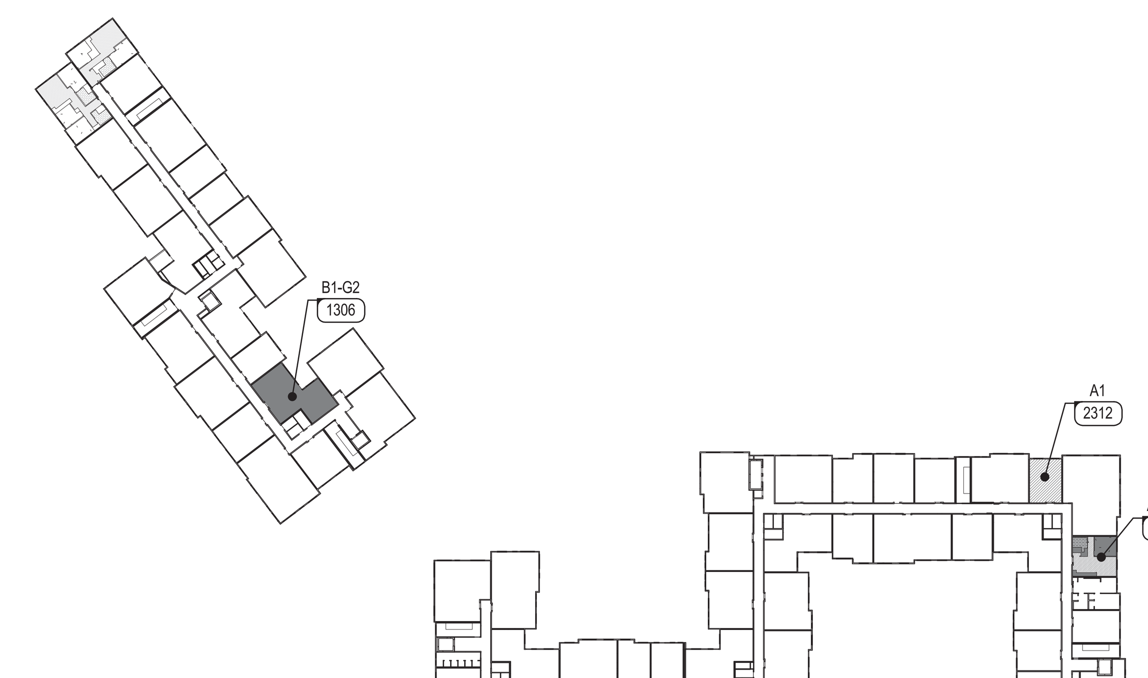

Third Floor Plan
1" = 80'-0"

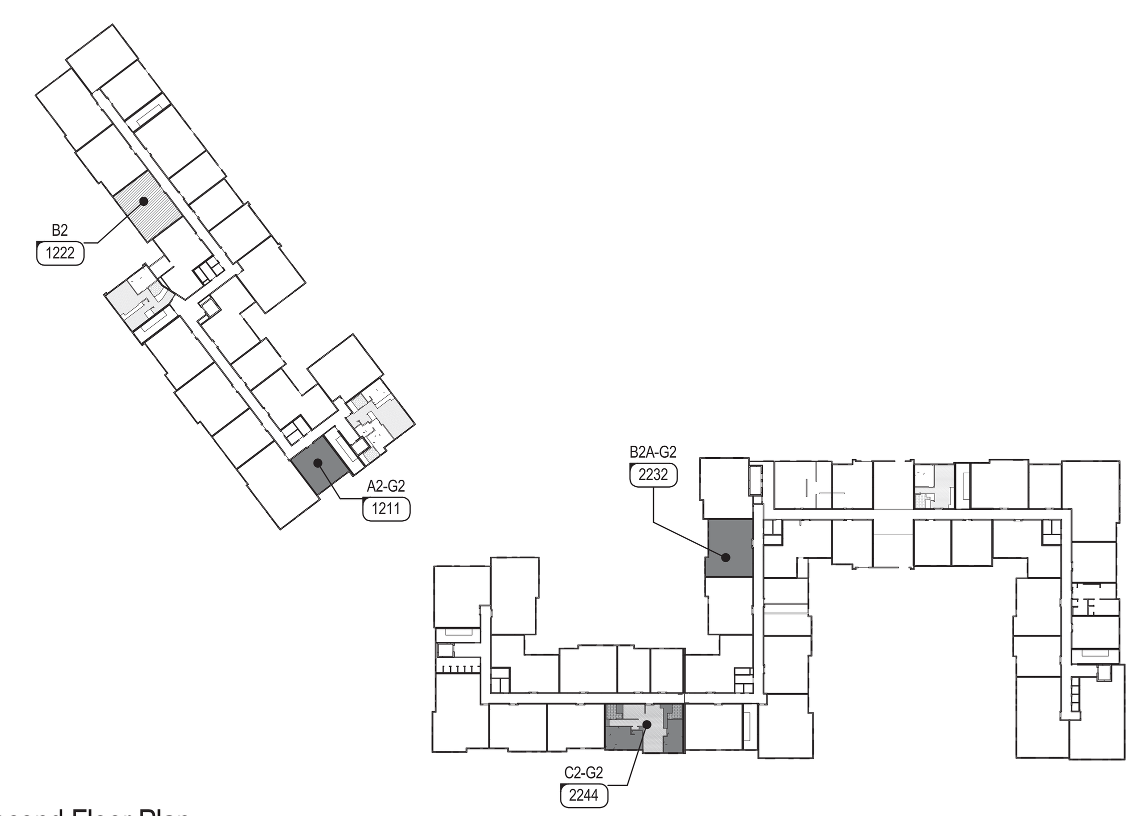

Second Floor Plan
1" = 80'-0"

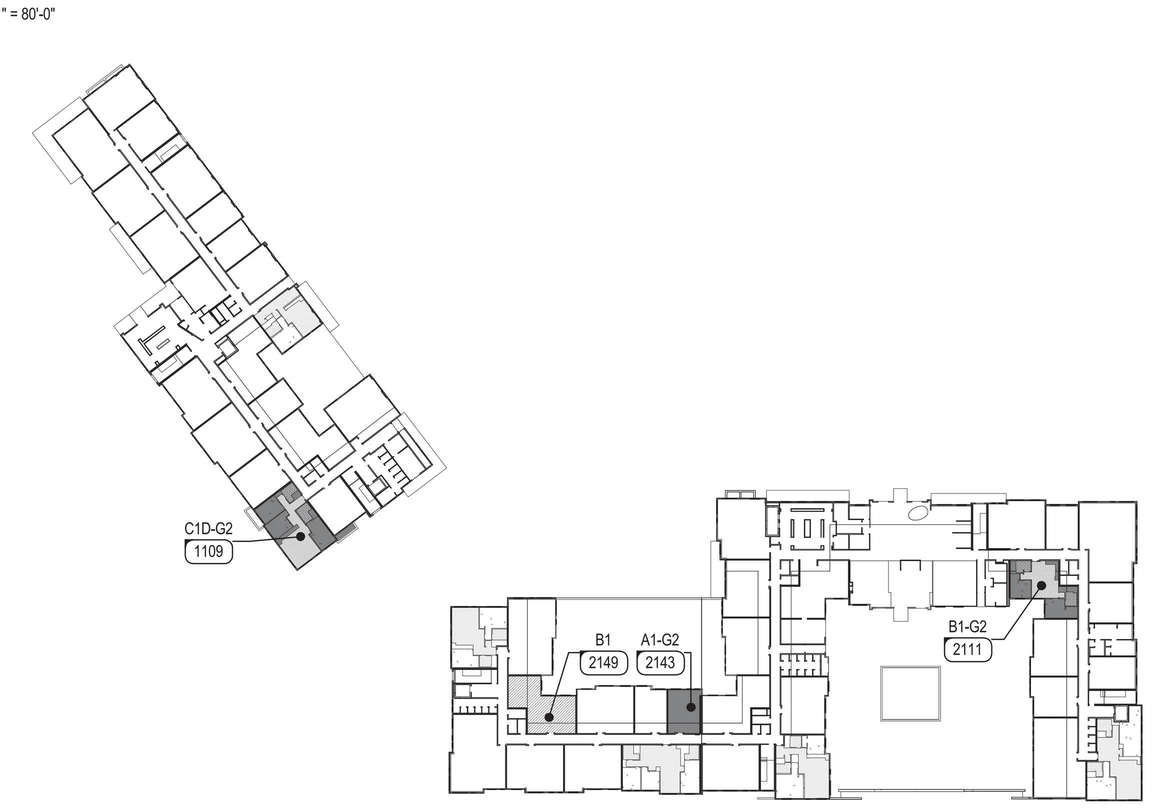

First Floor Plan
1" = 80'-0"

BROADSTONE BARE COVE
230 BEAL STREET, HINGHAM, MA
BUILDING SUMMARY & UNIT MIX
6-Nov-17

CUBE3 STUDIO architecture interiors planning

						BUILDING 1				BUILDING 1 TOTALS				BUILDING 2				BUILDING 2 TOTALS				PROJECT TOTALS					
BASE UNIT TYPE	UNIT TYPE	DESCRIPTION	BEDS/UNIT	BATHS/UNIT	UNIT NRSF	1ST FLOOR	2ND FLOOR	3RD FLOOR	4TH FLOOR	TOTAL UNITS	TOTAL BEDS	TOTAL BATHS	TOTAL NRSF	1ST FLOOR	2ND FLOOR	3RD FLOOR	4TH FLOOR	TOTAL UNITS	TOTAL BEDS	TOTAL BATHS	TOTAL NRSF	UNIT TYPE	TOTAL UNITS	TOTAL BEDS	TOTAL BATHS	TOTAL NRSF	UNIT MIX
A1	A1	1 BED/1 BATH - JUNIOR	1	1	628	3	3	3	3	12	12	12	7,488	5	6	5	6	22	22	22	13,853	A1	34	34	34	21,341	15.5%
A2	A2	1 BED/1 BATH	1	1	784	4	4	4	4	16	16	16	12,734	3	6	7	6	22	22	22	17,056	A2	38	38	38	29,790	17.3%
A3	A3	1 BED/1 BATH	1	1	1,011	1	1	1	1	4	4	4	4,045	0	0	0	0	0	0	0	0	A3	4	4	4	4,045	1.8%
		One Bed Average SF			***726***	8	8	8	8	**32**	32	32	24,267	8	12	12	12	**44**	44	44	30,909	***TOTAL ONE BEDS***	**76**	76	76	55,176	34.55%
B1	B1	2 BED/2 BATH - TYP. INSIDE CORNER	2	2	1,150	2	3	3	3	11	22	22	12,541	3	4	4	4	15	30	30	17,355	B1	26	52	52	29,896	11.8%
B2	B2	2 BED/2 BATH	2	2	1,104	5	5	5	4	19	38	38	21,163	9	11	11	10	41	82	82	45,081	B2	60	120	120	66,244	27.3%
B3	B3	2 BED/2 BATH	2	2	1,173	1	2	2	2	7	14	14	8,209	0	0	0	0	0	0	0	0	B3	7	14	14	8,209	3.2%
B4	B4	2 BED/2 BATH	2	2	1,286	0	1	1	1	3	6	6	3,858	0	0	0	0	0	0	0	0	B4	3	6	6	3,858	1.4%
B5	B5	2 BED/2 BATH	2	2	1,336	0	0	0	0	0	0	0	0	1	1	1	1	4	8	8	5,344	B5	4	8	8	5,344	1.8%
B6	B6	2 BED/2 BATH	2	2	1,371	0	0	0	0	0	0	0	0	1	1	1	0	3	6	6	4,113	B6	3	6	6	4,113	1.4%
B7	B7	2 BED/2 BATH	2	2	1,204	0	0	0	0	0	0	0	0	1	1	1	1	4	8	8	4,817	B7	4	8	8	4,817	1.8%
B8	B8	2 BED/1 BATH	2	1	1,031	1	1	1	0	3	6	3	3,093	0	0	0	0	0	0	0	0	B8	3	6	3	3,093	1.4%
		Two Bed Average SF			***1,142***	9	12	12	10	**43**	86	83	48,864	15	18	18	16	**67**	134	134	76,710	***TOTAL TWO BEDS***	**110**	220	217	125,574	50.00%
C1	C1	3 BED/2 BATH	3	2	1,408	2	2	2	2	8	24	16	11,125	1	1	1	1	4	12	8	5,770	C1	12	36	24	16,895	5.5%
C2	C2	3 BED/2 BATH	3	2	1,553	0	0	0	0	0	0	0	0	1	1	2	2	6	18	12	9,318	C2	6	18	12	9,318	2.7%
C3	C3	3 BED/2 BATH	3	2	1,560	0	0	0	0	0	0	0	0	2	2	2	2	8	24	16	12,481	C3	8	24	16	12,481	3.6%
C4	C4	3 BED/2 BATH	3	2	1,750	0	0	0	0	0	0	0	0	1	1	1	1	4	12	8	7,000	C4	4	12	8	7,000	1.8%
C5	C5	3 BED/2 BATH	3	2	1,734	0	0	0	0	0	0	0	0	1	1	1	1	4	12	8	6,936	C5	4	12	8	6,936	1.8%
		Three Bed Average SF			***1,548***	2	2	2	2	**8**	24	16	11,125	6	6	7	7	**26**	78	52	41,505	***TOTAL THREE BEDS***	**34**	102	68	52,630	15.45%
TOTALS		***Unit Average SF***			***1,061***	19	22	22	20	**83**	142	131	84,256	29	36	37	35	**137**	256	230	149,124		**220**	398	361	233,380	100.00%

PARKING SUMMARY	
SURFACE PARKING	**130**
BUILDING 1 STRUCTURED PARKING (BELOW GRADE)	**52**
BUILDING 2 STRUCTURED PARKING (PARTIAL BELOW GRADE)	**162**
SURFACE ACCESSIBLE / VAN PARKING (INCLUDED IN TOTAL COUNT)	**4**
STRUCTURED ACCESSIBLE / VAN PARKING (INCLUDED IN TOTAL COUNT)	**11**
TOTAL PARKING SPACES	**344**
PARKING RATIO	**1.56**
BUILDING 1 GARAGE GSF	29,357
BUILDING 2 GARAGE GSF	69,997
BIKE STORAGE & LOUNGE (24 BIKES - INCLUDED IN GSF)	534
LARGE PACKAGE & RENTABLE STORAGE (INCLUDED IN GSF)	1,162
LOADING (INCLUDED IN GSF)	1,386
OVERALL STRUCTURED PARKING GSF*	99,354

*INCLUSIVE OF ALL AMENITY & BUILDING SUPPORT SPACES

BUILDING 1 RESIDENTIAL SUMMARY	CALCS
LOBBY, MAIL LOUNGE, DOG WASH, BIKE STORAGE @ GROUND FLOOR	2,233
BIKE STORAGE (24 BIKES)	
NET RENTABLE STORAGE AT GROUND FLOOR	225
NET RENTABLE STORAGE AT FOURTH FLOOR	151
GROUND FLOOR (LOBBY / AMENITY)	26,490
SECOND FLOOR	26,446
THIRD FLOOR	26,505
FOURTH FLOOR	24,559
TOTAL RESIDENTIAL NRSF	84,632
TOTAL RESIDENTIAL GSF	104,000
BUILDING EFFICIENCY*	**81%**

*INCLUSIVE OF TOTAL AMENITY & STORAGE SPACE

BUILDING 2 RESIDENTIAL SUMMARY	CALCS
LOBBY / LEASING / AMENITY @ GROUND FLOOR	9,255
LOUNGE @ SECOND FLOOR	409
SKY LOUNGE (MAX OCCUPANT POSTED SPACES)	1,580
NET RENTABLE STORAGE GARAGE	400
NET RENTABLE STORAGE FIRST FLOOR	200
TYP.NET RENTABLE STORAGE FLOORS 1-4 (300 SF / FLOOR)	840
GROUND FLOOR	48,164
SECOND FLOOR	48,080
THIRD FLOOR	48,149
FOURTH FLOOR	47,476
TOTAL RESIDENTIAL NRSF	150,564
TOTAL RESIDENTIAL GSF	191,869
BUILDING EFFICIENCY*	**78%**

*INCLUSIVE OF TOTAL AMENITY & RENTABLE STORAGE SPACE

PROJECT RESIDENTIAL SUMMARY	CALCS
BUILDING 1 GSF	104,000
BUILDING 2 GSF	191,869
SUBTOTAL RESIDENTIAL GSF	295,869
TOTAL PROJECT GSF*	395,223

*INCLUDES STRUCTURED PARKING

TOTAL RESIDENTIAL NRSF	233,380
PROJECT EFFICIENCY*	**79%**

*INCLUSIVE OF TOTAL AMENITY SPACE

TOTAL GROUP 2 UNITS	11
TOTAL UNITS	220
PERCENTAGE OF GROUP UNITS	**5%**

*GROUP 2 UNITS HIGHLIGHTED IN ORANGE

BROADSTONE BARE COVE
230 BEAL STREET, HINGHAM, MA
BUILDING SUMMARY & UNIT MIX
6-Nov-17

CUBE3 STUDIO architecture interiors planning

						BUILDING 1				BUILDING 1 TOTALS				BUILDING 2				BUILDING 2 TOTALS				PROJECT TOTALS					
BASE UNIT TYPE	UNIT TYPE	DESCRIPTION	BEDS/UNIT	BATHS/UNIT	UNIT NRSF	1ST FLOOR	2ND FLOOR	3RD FLOOR	4TH FLOOR	TOTAL UNITS	TOTAL BEDS	TOTAL BATHS	TOTAL NRSF	1ST FLOOR	2ND FLOOR	3RD FLOOR	4TH FLOOR	TOTAL UNITS	TOTAL BEDS	TOTAL BATHS	TOTAL NRSF	UNIT TYPE	TOTAL UNITS	TOTAL BEDS	TOTAL BATHS	TOTAL NRSF	UNIT MIX
A1	A1	1 BED/1 BATH - JUNIOR	1	1	610	2	2	2	2	8	8	8	4,880	1	2	2	1	6	6	6	3,660	A1	14	14	14	8,540	6.4%
	A1-G2	1 BED/1 BATH - GROUP 2 UNIT	1	1	605	0	0	0	0	0	0	0	0	1	0	0	1	2	2	2	1,210	A1-G2	2	2	2	1,210	0.9%
	A1A	1 BED/1 BATH - JUNIOR	1	1	627	0	0	0	0	0	0	0	0	2	2	2	2	8	8	8	5,016	A1A	8	8	8	5,016	3.6%
	A1B	1 BED/1 BATH - JUNIOR	1	1	652	1	1	1	1	4	4	4	2,608	1	1	1	1	4	4	4	2,608	A1B	8	8	8	5,216	3.6%
	A1C	1 BED/1 BATH - JUNIOR	1	1	713	0	0	0	0	0	0	0	0	0	1	0	0	1	1	1	713	A1C	1	1	1	713	0.5%
	A1D	1 BED/1 BATH - JUNIOR	1	1	646	0	0	0	0	0	0	0	0	0	0	0	1	1	1	1	646	A1D	1	1	1	646	0.5%
A2	A2	1 BED/1 BATH	1	1	750	1	0	1	1	3	3	3	2,250	1	2	1	3	7	7	7	5,250	A2	10	10	10	7,500	4.5%
	A2-G2	1 BED/1 BATH - GROUP 2 UNIT	1	1	750	0	1	0	0	1	1	1	750	0	0	1	0	1	1	1	750	A2-G2	2	2	2	1,500	0.9%
	A2A	1 BED/1 BATH	1	1	780	0	0	0	0	0	0	0	0	1	3	1	0	5	5	5	3,900	A2A	5	5	5	3,900	2.3%
	A2B	1 BED/1 BATH	1	1	780	0	0	0	0	0	0	0	0	1	1	1	0	3	3	3	2,340	A2B	3	3	3	2,340	1.4%
	A2C	1 BED/1 BATH	1	1	790	0	0	0	0	0	0	0	0	0	0	2	2	4	4	4	3,160	A2C	4	4	4	3,160	1.8%
	A2D	1 BED/1 BATH	1	1	807	3	3	2	1	9	9	9	7,263	0	0	0	0	0	0	0	0	A2D	9	9	9	7,263	4.1%
	A2E	1 BED/1 BATH	1	1	828	0	0	1	1	2	2	2	1,656	0	0	1	1	2	2	2	1,656	A2E	4	4	4	3,312	1.8%
	A2F	1 BED/1 BATH	1	1	815	0	0	0	1	1	1	1	815	0	0	0	0	0	0	0	0	A2F	1	1	1	815	0.5%
A3	A3	1 BED/1 BATH	1	1	986	0	1	0	0	1	1	1	986	0	0	0	0	0	0	0	0	A3	1	1	1	986	0.5%
	A3A	1 BED/1 BATH	1	1	1,019	0	0	1	1	2	2	2	2,038	0	0	0	0	0	0	0	0	A3A	2	2	2	2,038	0.9%
	A3B	1 BED/1 BATH	1	1	1,021	1	0	0	0	1	1	1	1,021	0	0	0	0	0	0	0	0	A3B	1	1	1	1,021	0.5%
		One Bed Average SF			***726***	8	8	8	8	**32**	32	32	24,267	8	12	12	12	**44**	44	44	30,909	***TOTAL ONE BEDS***	**76**	76	76	55,176	34.55%
B1	B1	2 BED/2 BATH - TYP. INSIDE CORNER	2	2	1,157	2	2	1	2	7	14	14	8,099	2	4	4	4	14	28	28	16,198	B1	21	42	42	24,297	9.5%
	B1-G2	2 BED/2 BATH - GROUP 2 UNIT	2	2	1,157	0	0	1	0	1	2	2	1,157	1	0	0	0	1	2	2	1,157	B1-G2	2	4	4	2,314	0.9%
	B1A	2 BED/2 BATH	2	2	1,095	0	1	1	1	3	6	6	3,285	0	0	0	0	0	0	0	0	B1A	3	6	6	3,285	1.4%
B2	B2	2 BED/2 BATH	2	2	1,060	1	1	1	0	3	6	6	3,180	0	0	0	3	3	6	6	3,180	B2	6	12	12	6,360	2.7%
	B2-G2	2 BED/2 BATH - GROUP 2 UNIT	2	2	1,062	0	0	0	1	1	2	2	1,062	0	0	0	0	0	0	0	0	B2-G2	1	2	2	1,062	0.5%
	B2A	2 BED/2 BATH	2	2	1,088	1	1	1	1	4	8	8	4,352	2	2	3	0	7	14	14	7,616	B2A	11	22	22	11,968	5.0%
	B2A-G2	2 BED/2 BATH - GROUP 2 UNIT	2	2	1,088	0	0	0	0	0	0	0	0	0	1	0	1	2	4	4	2,176	B2A-G2	2	4	4	2,176	0.9%
	B2A.1	2 BED/2 BATH	2	2	1,088	0	0	0	0	0	0	0	0	3	3	3	0	9	18	18	9,792	B2A.1	9	18	18	9,792	4.1%
	B2B	2 BED/2 BATH	2	2	1,102	0	0	0	0	0	0	0	0	1	1	1	2	5	10	10	5,510	B2B	5	10	10	5,510	2.3%
	B2C	2 BED/2 BATH	2	2	1,110	1	1	1	0	3	6	6	3,330	2	2	2	2	8	16	16	8,880	B2C	11	22	22	12,210	5.0%
	B2D	2 BED/2 BATH	2	2	1,138	1	1	1	2	5	10	10	5,690	0	1	1	1	3	6	6	3,414	B2D	8	16	16	9,104	3.6%
	B2E	2 BED/2 BATH	2	2	1,151	0	0	0	0	0	0	0	0	1	1	1	0	3	6	6	3,453	B2E	3	6	6	3,453	1.4%
	B2F	2 BED/2 BATH	2	2	1,183	1	1	1	0	3	6	6	3,549	0	0	0	0	0	0	0	0	B2F	3	6	6	3,549	1.4%
	B2G	2 BED/2 BATH	2	2	1,060	0	0	0	0	0	0	0	0	0	0	0	1	1	2	2	1,060	B2G	1	2	2	1,060	0.5%
B3	B3	2 BED/2 BATH	2	2	1,153	1	1	1	1	4	8	8	4,612	0	0	0	0	0	0	0	0	B3	4	8	8	4,612	1.8%
	B3A	2 BED/2 BATH	2	2	1,193	0	1	0	0	1	2	2	1,193	0	0	0	0	0	0	0	0	B3A	1	2	2	1,193	0.5%
	B3B	2 BED/2 BATH	2	2	1,202	0	0	1	1	2	4	4	2,404	0	0	0	0	0	0	0	0	B3B	2	4	4	2,404	0.9%
B4	B4	2 BED/2 BATH	2	2	1,286	0	1	1	1	3	6	6	3,858	0	0	0	0	0	0	0	0	B4	3	6	6	3,858	1.4%
B5	B5	2 BED/2 BATH	2	2	1,336	0	0	0	0	0	0	0	0	1	1	1	1	4	8	8	5,344	B5	4	8	8	5,344	1.8%
B6	B6	2 BED/2 BATH	2	2	1,371	0	0	0	0	0	0	0	0	1	1	1	0	3	6	6	4,113	B6	3	6	6	4,113	1.4%
B7	B7	2 BED/2 BATH	2	2	1,118	0	0	0	0	0	0	0	0	0	0	0	1	1	2	2	1,118	B7	1	2	2	1,118	0.5%
	B7A	2 BED/2 BATH	2	2	1,233	0	0	0	0	0	0	0	0	1	1	1	0	3	6	6	3,699	B7A	3	6	6	3,699	1.4%
B8	B8	2 BED/1 BATH	2	1	1,031	1	1	1	0	3	6	3	3,093	0	0	0	0	0	0	0	0	B8	3	6	3	3,093	1.4%
		Two Bed Average SF			***1,142***	9	12	12	10	**43**	86	83	48,864	15	18	18	16	**67**	134	134	76,710	***TOTAL TWO BEDS***	**110**	220	217	125,574	50.00%
C1	C1	3 BED/2 BATH	3	2	1,300	1	1	1	0	3	9	6	3,900	0	0	0	0	0	0	0	0	C1	3	9	6	3,900	1.4%
	C1A	3 BED/2 BATH	3	2	1,309	0	0	0	1	1	3	2	1,309	0	0	0	0	0	0	0	0	C1A	1	3	2	1,309	0.5%
	C1B	3 BED/2 BATH	3	2	1,360	0	0	0	0	0	0	0	0	0	0	0	1	1	3	2	1,360	C1B	1	3	2	1,360	0.5%
	C1C	3 BED/2 BATH	3	2	1,409	0	0	0	1	1	3	2	1,409	0	0	0	0	0	0	0	0	C1C	1	3	2	1,409	0.5%
	C1D	3 BED/2 BATH	3	2	1,502	0	1	1	0	2	6	4	3,004	0	0	0	0	0	0	0	0	C1D	2	6	4	3,004	0.9%
	C1D-G2	3 BED/2 BATH - GROUP 2 UNIT	3	2	1,503	1	0	0	0	1	3	2	1,503	0	0	0	0	0	0	0	0	C1D-G2	1	3	2	1,503	0.5%
	C1E	3 BED/2 BATH	3	2	1,470	0	0	0	0	0	0	0	0	1	1	1	0	3	9	6	4,410	C1E	3	9	6	4,410	1.4%
C2	C2	3 BED/2 BATH	3	2	1,553	0	0	0	0	0	0	0	0	1	0	2	2	5	15	10	7,765	C2	5	15	10	7,765	2.3%
	C2-G2	3 BED/2 BATH - GROUP 2 UNIT	3	2	1,553	0	0	0	0	0	0	0	0	0	1	0	0	1	3	2	1,553	C2-G2	1	3	2	1,553	0.5%
C3	C3	3 BED/2 BATH	3	2	1,138	0	0	0	0	0	0	0	0	0	0	0	1	1	3	2	1,138	C3	1	3	2	1,138	0.5%
	C3A	3 BED/2 BATH	3	2	1,633	0	0	0	0	0	0	0	0	1	1	1	0	3	9	6	4,899	C3A	3	9	6	4,899	1.4%
	C3B	3 BED/2 BATH	3	2	1,611	0	0	0	0	0	0	0	0	1	1	1	1	4	12	8	6,444	C3B	4	12	8	6,444	1.8%
C4	C4	3 BED/2 BATH	3	2	1,600	0	0	0	0	0	0	0	0	0	0	0	0	0	0	0	0	C4	0	0	0	0	0.0%
	C4A	3 BED/2 BATH	3	2	1,750	0	0	0	0	0	0	0	0	1	1	1	1	4	12	8	7,000	C4A	4	12	8	7,000	1.8%
C5	C5	3 BED/2 BATH	3	2	1,734	0	0	0	0	0	0	0	0	1	1	1	1	4	12	8	6,936	C5	4	12	8	6,936	1.8%
		Three Bed Average SF			***1,548***	2	2	2	2	**8**	24	16	11,125	6	6	7	7	**26**	78	52	41,505	***TOTAL THREE BEDS***	**34**	102	68	52,630	15.45%
TOTALS		***Unit Average SF***			***1,061***	19	22	22	20	**83**	142	131	84,256	29	36	37	35	**137**	256	230	149,124		**220**	398	361	233,380	100.00%

PARKING SUMMARY	
SURFACE PARKING	**130**
BUILDING 1 STRUCTURED PARKING (BELOW GRADE)	**52**
BUILDING 2 STRUCTURED PARKING (PARTIAL BELOW GRADE)	**162**
SURFACE ACCESSIBLE / VAN PARKING (INCLUDED IN TOTAL COUNT)	**4**
STRUCTURED ACCESSIBLE / VAN PARKING (INCLUDED IN TOTAL COUNT)	**11**
TOTAL PARKING SPACES	**344**
PARKING RATIO	**1.56**
BUILDING 1 GARAGE GSF	29,357
BUILDING 2 GARAGE GSF	69,997
BIKE STORAGE & LOUNGE (24 BIKES - INCLUDED IN GSF)	534
LARGE PACKAGE & RENTABLE STORAGE (INCLUDED IN GSF)	1,162
LOADING (INCLUDED IN GSF)	1,386
OVERALL STRUCTURED PARKING GSF*	99,354

BUILDING 1 RESIDENTIAL SUMMARY	CALCS
LOBBY, MAIL LOUNGE, DOG WASH, BIKE STORAGE @ GROUND FLOOR	2,233
BIKE STORAGE (24 BIKES)	
NET RENTABLE STORAGE AT GROUND FLOOR	225
NET RENTABLE STORAGE AT FOURTH FLOOR	151
GROUND FLOOR (LOBBY / AMENITY)	26,490
SECOND FLOOR	26,446
THIRD FLOOR	26,505
FOURTH FLOOR	24,559
TOTAL RESIDENTIAL NRSF	84,632
TOTAL RESIDENTIAL GSF	104,000
BUILDING EFFICIENCY*	**81%**

*INCLUSIVE OF TOTAL AMENITY & STORAGE SPACE

BUILDING 2 RESIDENTIAL SUMMARY	CALCS
LOBBY / LEASING / AMENITY @ GROUND FLOOR	9,255
LOUNGE @ SECOND FLOOR	409
SKY LOUNGE (MAX OCCUPANT POSTED SPACES)	1,580
NET RENTABLE STORAGE GARAGE	400
NET RENTABLE STORAGE FIRST FLOOR	200
TYP.NET RENTABLE STORAGE FLOORS 1-4 (300 SF / FLOOR)	840
GROUND FLOOR	48,164
SECOND FLOOR	48,080
THIRD FLOOR	48,149
FOURTH FLOOR	47,476
TOTAL RESIDENTIAL NRSF	150,564
TOTAL RESIDENTIAL GSF	191,869
BUILDING EFFICIENCY*	**78%**

*INCLUSIVE OF TOTAL AMENITY & RENTABLE STORAGE SPACE

PROJECT RESIDENTIAL SUMMARY	CALCS
BUILDING 1 GSF	104,000
BUILDING 2 GSF	191,869
SUBTOTAL RESIDENTIAL GSF	295,869
TOTAL PROJECT GSF*	395,223

*INCLUDES STRUCTURED PARKING

TOTAL RESIDENTIAL NRSF	233,380
PROJECT EFFICIENCY*	**79%**

*INCLUSIVE OF TOTAL AMENITY SPACE

TOTAL GROUP 2 UNITS	11
TOTAL UNITS	220
PERCENTAGE OF GROUP UNITS	**5%**

*GROUP 2 UNITS HIGHLIGHTED IN ORANGE

CUBE 3
architecture interiors planning
360 Merrimack Street Lawrence MA 01843
phone: 978.989.9900 www.cube3studio.com

project information:
BROADSTONE BARE COVE HINGHAM
230 BEAL ST.
HINGHAM, MA

client information:
Broadstone Bare Cove Alliance, LLC.

C/O Alliance Residential Company
184 High Street Suite 401 Boston, MA 02110

consultant information:

issuance:
COMPREHENSIVE PERMIT APPLICATION PLANS
NOT FOR CONSTRUCTION

key plan:

drawing information:

drawing by:	BE / BA
drawing checked by:	AB
drawing scale:	As indicated
drawing date:	12 AUGUST 2017
project number:	15122.00

drawing revisions:

No.	Description	Date
1	Issued for ZBA Resubmittal	10/25/16
2	Issued for ZBA Resubmittal	11/02/16
3	Issued for ZBA Resubmittal	01/04/17
4	Issued for ZBA Resubmittal	01/19/17
5	Issued for ZBA Resubmittal	02/14/17
6	Issued for ZBA Resubmittal	03/29/17
7	Issued for ZBA Resubmittal	04/11/17
8	Modifications to Project Plans	11/02/17

registration:
REGISTERED ARCHITECT JOHN H. HARDING No. 50460 SALEM MASSACHUSETTS COMMONWEALTH OF MASSACHUSETTS

drawing name:
Unit Mix & Building Summary

drawing number:
A-009

COPYRIGHT (C) 2017 CUBE 3 STUDIO LLC, ALL RIGHTS RESERVED

AFFORDABLE UNIT LOCATIONS

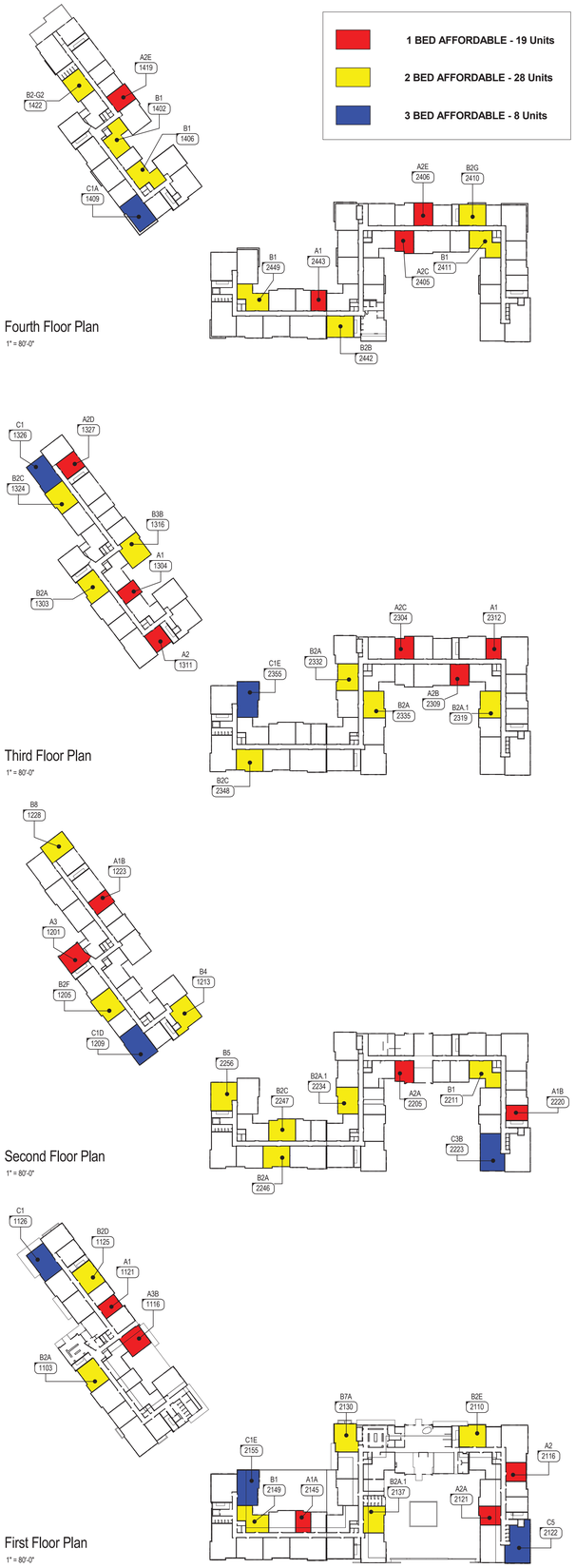

BROADSTONE BARE COVE
230 BEAL STREET, HINGHAM, MA
AFFORDABLE UNIT MIX
3-Nov-17

			MARKET UNITS					AFFORDABLE UNITS				
UNIT TYPE	BEDS / UNIT	UNIT NRSF	TOTAL UNITS	TOTAL BEDS	TOTAL NRSF	AVG. NRSF	UNIT MIX	TOTAL UNITS	TOTAL BEDS	TOTAL NRSF	AVG. NRSF	UNIT MIX
A1	1	610	10	10	6,100	610	4.5%	4	4	2,440	610	1.8%
A1-G2	1	605	2	2	1,210	605	0.9%	0	0	0	0	0.0%
A1A	1	627	7	7	4,389	627	3.2%	1	1	627	627	0.5%
A1B	1	652	6	6	3,912	652	2.7%	2	2	1,304	652	0.9%
A1C	1	713	1	1	713	713	0.5%	0	0	0	0	0.0%
A1D	1	646	1	1	646	646	0.5%	0	0	0	0	0.0%
A2	1	750	8	8	6,000	750	3.6%	2	2	1,500	750	0.9%
A2-G2	1	750	2	2	1,500	750	0.9%	0	0	0	0	0.0%
A2A	1	780	3	3	2,340	780	1.4%	2	2	1,560	780	0.9%
A2B	1	780	2	2	1,560	780	0.9%	1	1	780	780	0.5%
A2C	1	790	2	2	1,580	790	0.9%	2	2	1,580	790	0.9%
A2D	1	807	8	8	6,456	807	3.6%	1	1	807	807	0.5%
A2E	1	828	2	2	1,656	828	0.9%	2	2	1,656	828	0.9%
A2F	1	815	1	1	815	815	0.5%	0	0	0	0	0.0%
A3	1	986	0	0	0	0	0.0%	1	1	986	986	0.5%
A3A	1	1,019	2	2	2,038	1,019	0.9%	0	0	0	0	0.0%
A3B	1	1,021	0	0	0	0	0.0%	1	1	1,021	1,021	0.5%
One Bed Average SF		***726***	**57**	**57**	**40,915**	**718**	**25.91%**	**19**	**19**	**14,261**	**751**	**8.64%**
B1	2	1,157	15	30	17,355	1,157	6.8%	6	12	6,942	1,157	2.7%
B1-G2	2	1,157	2	4	2,314	1,157	0.9%	0	0	0	0	0.0%
B1A	2	1,095	3	6	3,285	1,095	1.4%	0	0	0	0	0.0%
B2	2	1,060	6	12	6,360	1,060	2.7%	0	0	0	0	0.0%
B2-G2	2	1,062	0	0	0	0	0.0%	1	2	1,062	0	0.5%
B2A	2	1,088	6	12	6,528	1,088	2.7%	5	10	5,440	1,088	2.3%
B2A-G2	2	1,088	2	4	2,176	1,088	0.9%	0	0	0	0	0.0%
B2A.1	2	1,088	6	12	6,528	1,088	2.7%	3	6	3,264	1,088	1.4%
B2B	2	1,102	4	8	4,408	1,102	1.8%	1	2	1,102	1,102	0.5%
B2C	2	1,110	9	18	9,990	1,110	4.1%	2	4	2,220	1,110	0.9%
B2D	2	1,138	7	14	7,966	1,138	3.2%	1	2	1,138	1,138	0.5%
B2E	2	1,151	2	4	2,302	1,151	0.9%	1	2	1,151	1,151	0.5%
B2F	2	1,183	2	4	2,366	1,183	0.9%	1	2	1,183	1,183	0.5%
B2G	2	1,060	0	0	0	0	0.0%	1	2	1,060	1,060	0.5%
B3	2	1,153	3	6	3,459	1,153	1.4%	1	2	1,153	1,153	0.5%
B3A	2	1,193	1	2	1,193	1,193	0.5%	0	0	0	0	0.0%
B3B	2	1,202	1	2	1,202	1,202	0.5%	1	2	1,202	1,202	0.5%
B4	2	1,286	2	4	2,572	1,286	0.9%	1	2	1,286	1,286	0.5%
B5	2	1,336	3	6	4,008	1,336	1.4%	1	2	1,336	1,336	0.5%
B6	2	1,371	3	6	4,113	1,371	1.4%	0	0	0	0	0.0%
B7	2	1,118	1	2	1,118	1,118	0.5%	0	0	0	0	0.0%
B7A	2	1,233	2	4	2,466	1,233	0.9%	1	2	1,233	1,233	0.5%
B8	2	1,031	2	4	2,062	1,031	0.9%	1	2	1,031	1,031	0.5%
Two Bed Average SF		***1,142***	**82**	**164**	**93,771**	**1,144**	**37.27%**	**28**	**56**	**31,803**	**1,136**	**12.73%**
C1	3	1,300	1	3	1,300	1,300	0.5%	2	6	2,600	1,300	0.9%
C1A	3	1,309	0	0	0	0	0.0%	1	3	1,309	1,309	0.5%
C1B	3	1,360	1	3	1,360	1,360	0.5%	0	0	0	0	0.0%
C1C	3	1,409	1	3	1,409	1,409	0.5%	0	0	0	0	0.0%
C1D	3	1,502	1	3	1,502	1,502	0.5%	1	3	1,502	1,502	0.5%
C1D-G2	3	1,503	1	3	1,503	1,503	0.5%	0	0	0	0	0.0%
C1E	3	1,470	1	3	1,470	1,470	0.5%	2	6	2,940	1,470	0.9%
C2	3	1,553	5	15	7,765	1,553	2.3%	0	0	0	0	0.0%
C2-G2	3	1,553	1	3	1,553	1,553	0.5%	0	0	0	0	0.0%
C3	3	1,138	1	3	1,138	0	0.5%	0	0	0	0	0.0%
C3A	3	1,633	3	9	4,899	1,633	1.4%	0	0	0	0	0.0%
C3B	3	1,611	3	9	4,833	1,611	1.4%	1	3	1,611	1,611	0.5%
C4	3	1,600	0	0	0	0	0.0%	0	0	0	0	0.0%
C4A	3	1,750	4	12	7,000	1,750	1.8%	0	0	0	0	0.0%
C5	3	1,734	3	9	5,202	1,734	1.4%	1	3	1,734	1,734	0.5%
Three Bed Average SF		***1,548***	**26**	**78**	**40,934**	**1,574**	**11.82%**	**8**	**24**	**11,696**	**1,462**	**3.64%**
Unit Average SF		***1,061***	**165**	**299**	**175,620**	**1,064**	**75.00%**	**55**	**99**	**57,760**	**1,050**	**25.00%**

TOTAL UNITS **220**

KEY

	MARKET UNITS		AFFORDABLE UNITS		PROJECT TOTALS	
	NUMBER OF UNITS	AVERAGE SF	NUMBER OF UNITS	AVERAGE SF	TOTAL UNITS	AVERAGE SF BY UNIT TYPE
ONE BED	57	718	19	751	76	726
TWO BED	82	1,144	28	1,136	110	1,142
THREE BED	26	1,574	8	1,462	34	1,548
TOTAL	165		55		220	

CUBE 3 STUDIO
architecture interiors planning
360 Merrimack Street Lawrence MA 01843
phone: 978.989.9900 www.cube3studio.com

project information:
BROADSTONE BARE COVE
HINGHAM
230 BEAL ST.
HINGHAM, MA

client information:
Broadstone Bare Cove Alliance, LLC.

C/O Alliance
Residential Company
184 High Street Suite
401 Boston, MA 02110

consultant information:

issuance:
COMPREHENSIVE PERMIT APPLICATION PLANS
NOT FOR CONSTRUCTION

key plan:

drawing information:

drawing by:	BE / BA
drawing checked by:	AB
drawing scale:	As indicated
drawing date:	12 AUGUST 2017
project number:	15122.00

drawing revisions:

No.	Description	Date
1	Issued for ZBA Resubmittal	10/25/16
2	Issued for ZBA Resubmittal	11/02/16
3	Issued for ZBA Resubmittal	01/04/17
4	Issued for ZBA Resubmittal	01/19/17
5	Issued for ZBA Resubmittal	02/14/17
6	Issued for ZBA Resubmittal	03/29/17
7	Issued for ZBA Resubmittal	04/11/17
8	Modifications to Project Plans	11/02/17

registration:
REGISTERED ARCHITECT
JOHN H. HARTOG
No. 50480
SALEM
MASSACHUSETTS
COMMONWEALTH OF MASSACHUSETTS

drawing name:
Affordable Unit Diagrams

drawing number:
A-009.1

COPYRIGHT (C) 2017 CUBE 3 STUDIO LLC, ALL RIGHTS RESERVED

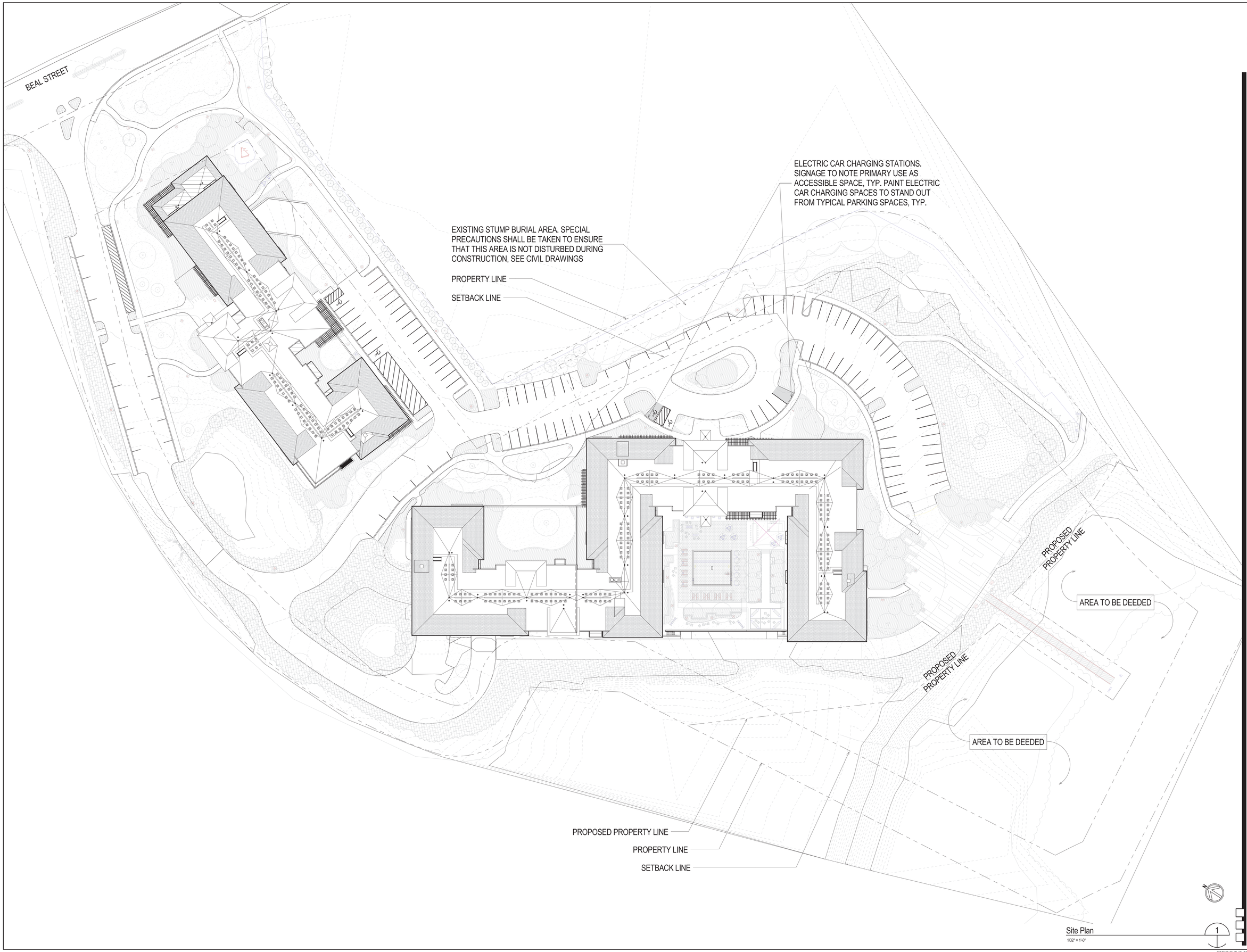

Site Plan
1/32" = 1'-0"
1

CUBE 3
architecture interiors planning
360 Merrimack Street Lawrence MA 01843
phone: 978.989.9900 www.cube3studio.com

project information:

BROADSTONE
BARE COVE
HINGHAM
230 BEAL ST.
HINGHAM, MA

client information:

Broadstone Bare Cove Alliance, LLC.

C/O Alliance
Residential Company
184 High Street Suite
401 Boston, MA 02110

consultant information:

issuance:

COMPREHENSIVE PERMIT APPLICATION PLANS

NOT FOR CONSTRUCTION

key plan:

drawing information:

drawing by:	BE / BA
drawing checked by:	AB
drawing scale:	1/32" = 1'-0"
drawing date:	12 AUGUST 2017
project number:	15122.00

drawing revisions:

No.	Description	Date
1	Issued for ZBA Resubmittal	10/25/16
2	Issued for ZBA Resubmittal	11/02/16
3	Issued for ZBA Resubmittal	01/04/17
4	Issued for ZBA Resubmittal	01/19/17
5	Issued for ZBA Resubmittal	02/14/17
6	Issued for ZBA Resubmittal	03/29/17
7	Issued for ZBA Resubmittal	04/11/17
8	Modifications to Project Plans	11/02/17

registration:

REGISTERED ARCHITECT
JOHN H. HARDING III
No. 50489
SALEM
MASSACHUSETTS
COMMONWEALTH OF MASSACHUSETTS

drawing name:

Site Plan

drawing number:

A-080

COPYRIGHT (C) 2017 CUBE 3 STUDIO LLC, ALL RIGHTS RESERVED

VEHICULAR TRAFFIC COATING

VEHICUAR TRAFFIC COATING, SPEC A

VEHICUAR TRAFFIC COATING, SPEC B

NOTES:
1. REFER TO MANUFACTURER'S RECOMMENDED DETAILS FOR VEHICULAR TRAFFIC COATING TERMINATION AND PENETRATIONS.
2. REFER TO MANUFACTURER'S RECOMMENDATIONS FOR PROPOER THICKNESS OF VEHICULAR TRAFFIC COATING.

BUILDING 1 RENTABLE STORAGE SUMMARY

GARAGE FLOOR - 3
FIRST FLOOR - 6
SECOND FLOOR -0
THIRD FLOOR - 0
FOURTH FLOOR - 5

TOTAL STORAGE SPACES - 14

BUILDING 1 PARKING SUMMARY

STANDARD - 48
ACCESIBLE -2
VAN ACCESSIBLE - 2
ELECTRIC CAR STATION - 2

TOTAL CAR SPACES - 52

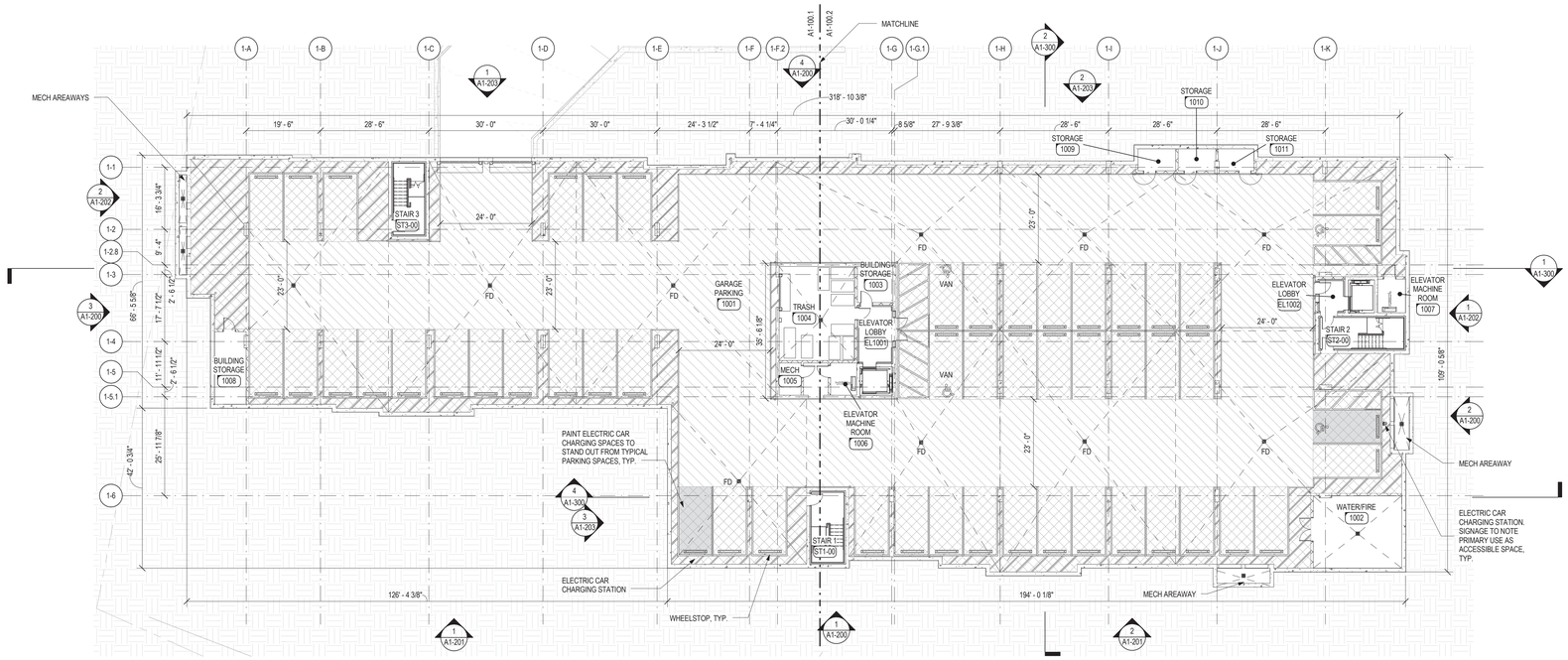

NOTE: PROVIDE 6" BOLLARDS AT LEADING EDGE OF ALL MASONRY AND CONCRETE WALL IN GARAGE, TYPICAL

Building 1 - Ground Floor Overall
1/16" = 1'-0"

CUBE 3
architecture interiors planning
360 Merrimack Street Lawrence MA 01843
phone: 978.989.9900 www.cube3studio.com

project information:
BROADSTONE BARE COVE HINGHAM
230 BEAL ST.
HINGHAM, MA

client information:
Broadstone Bare Cove Alliance, LLC.

C/O Alliance Residential Company
184 High Street Suite 401 Boston, MA 02110

consultant information:

issuance:
COMPREHENSIVE PERMIT APPLICATION PLANS
NOT FOR CONSTRUCTION

key plan:

drawing information:

drawing by:	BE / AH
drawing checked by:	AB
drawing scale:	As indicated
drawing date:	12 AUGUST 2017
project number:	15122.00

drawing revisions:

No.	Description	Date
1	Issued for ZBA Resubmittal	10/25/16
2	Issued for ZBA Resubmittal	11/02/16
3	Issued for ZBA Resubmittal	01/04/17
4	Issued for ZBA Resubmittal	01/19/17
5	Issued for ZBA Resubmittal	02/14/17
6	Issued for ZBA Resubmittal	03/29/17
7	Issued for ZBA Resubmittal	04/11/17
8	Modifications to Project Plans	11/02/17

registration:
REGISTERED ARCHITECT
JOHN H. HARDING
No. 50480
SALEM
MASSACHUSETTS
COMMONWEALTH OF MASSACHUSETTS

drawing name:
Building 1 - Garage Floor Plan

drawing number:
A1-100

COPYRIGHT (C) 2017 CUBE 3 STUDIO LLC, ALL RIGHTS RESERVED

BUILDING 1 RENTABLE STORAGE SUMMARY

GARAGE FLOOR - 3
FIRST FLOOR - 6
SECOND FLOOR -0
THIRD FLOOR - 0
FOURTH FLOOR - 5

TOTAL STORAGE SPACES - 14

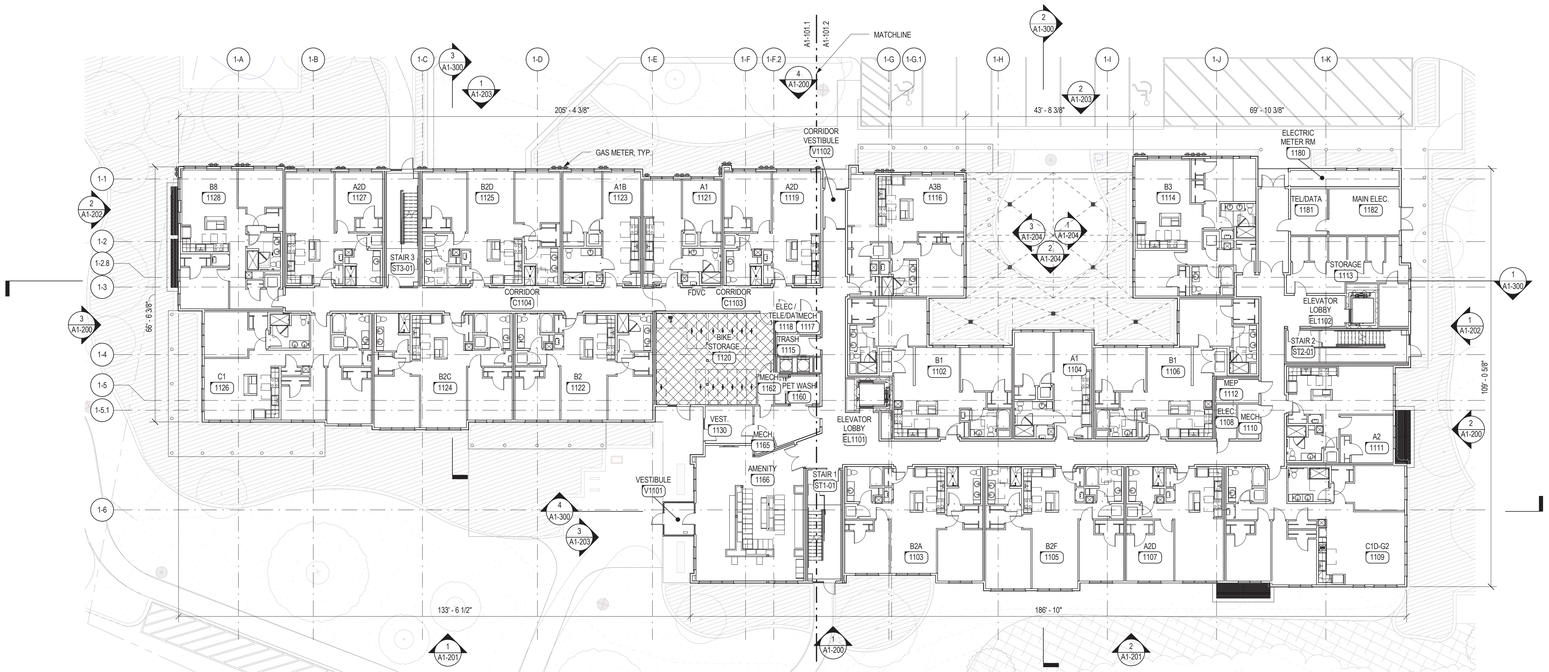

Building 1 - First Floor Overall
1/16" = 1'-0"

CUBE 3
architecture interiors planning
369 Merrimack Street Lawrence MA 01843
phone: 978.989.9909 www.cube3studio.com

project information

BROADSTONE
BARE COVE
HINGHAM
230 BEAL ST.
HINGHAM, MA

client information

Broadstone Bare Cove Alliance, LLC.

C/O Alliance
Residential Company
184 High Street Suite
401 Boston, MA 02110

consultant information

issuance

COMPREHENSIVE PERMIT APPLICATION PLANS

NOT FOR CONSTRUCTION

key plan

drawing information

drawing by:	BE / AH
drawing checked by:	AB
drawing scale:	1/16" = 1'-0"
drawing date:	12 AUGUST 2017
project number:	15122.00

drawing revisions:

No.	Description	Date
1	Issued for ZBA Resubmittal	10/25/16
2	Issued for ZBA Resubmittal	11/02/16
3	Issued for ZBA Resubmittal	01/04/17
4	Issued for ZBA Resubmittal	01/19/17
5	Issued for ZBA Resubmittal	02/14/17
6	Issued for ZBA Resubmittal	03/29/17
7	Issued for ZBA Resubmittal	04/11/17
8	Modifications to Project Plans	11/02/17

registration

drawing name

Building 1 - First Floor Plan

drawing number

A1-101

COPYRIGHT (C) 2017 CUBE 3 STUDIO LLC, ALL RIGHTS RESERVED

BUILDING 1 RENTABLE STORAGE SUMMARY

GARAGE FLOOR - 3
FIRST FLOOR - 6
SECOND FLOOR -0
THIRD FLOOR - 0
FOURTH FLOOR - 5

TOTAL STORAGE SPACES - 14

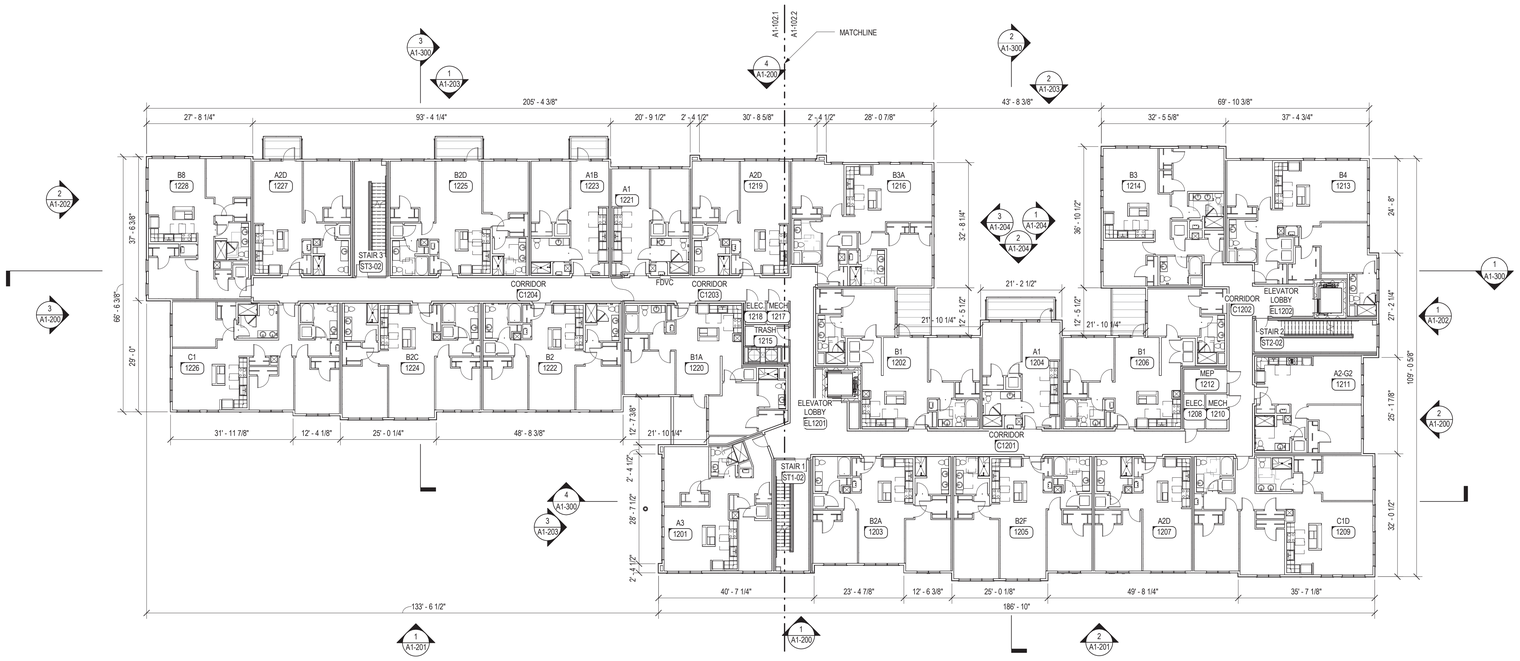

Building 1 - Second Floor Overall
1/16" = 1'-0"

1

CUBE 3
architecture interiors planning
369 Merrimack Street Lawrence MA 01843
phone: 978.989.9900 www.cube3studio.com

project information

BROADSTONE
BARE COVE
HINGHAM
230 BEAL ST.
HINGHAM, MA

client information

Broadstone Bare
Cove Alliance, LLC.

C/O Alliance
Residential Company
184 High Street Suite
401 Boston, MA 02110

consultant information

sequence

COMPREHENSIVE
PERMIT
APPLICATION PLANS

NOT FOR
CONSTRUCTION

key plan

drawing information

drawing by:	BE / AH
drawing checked by:	AB
drawing scale:	1/16" = 1'-0"
drawing date:	12 AUGUST 2017
project number:	15122.00

drawing revisions:

No.	Description	Date
1	Issued for ZBA Resubmittal	10/25/16
2	Issued for ZBA Resubmittal	11/02/16
3	Issued for ZBA Resubmittal	01/04/17
4	Issued for ZBA Resubmittal	01/19/17
5	Issued for ZBA Resubmittal	02/14/17
6	Issued for ZBA Resubmittal	03/29/17
7	Issued for ZBA Resubmittal	04/11/17
8	Modifications to Project Plans	11/02/17

registration

REGISTERED ARCHITECT
JOHN H. HARDIG
No. 50480
SALEM
MASSACHUSETTS
COMMONWEALTH OF MASSACHUSETTS

drawing name

Building 1 -
Second
Floor Plan

drawing number

A1-102

COPYRIGHT (C) 2017 CUBE 3 STUDIO LLC, ALL RIGHTS RESERVED

BUILDING 1 RENTABLE STORAGE SUMMARY

GARAGE FLOOR - 3
FIRST FLOOR - 6
SECOND FLOOR -0
THIRD FLOOR - 0
FOURTH FLOOR - 5

TOTAL STORAGE SPACES - 14

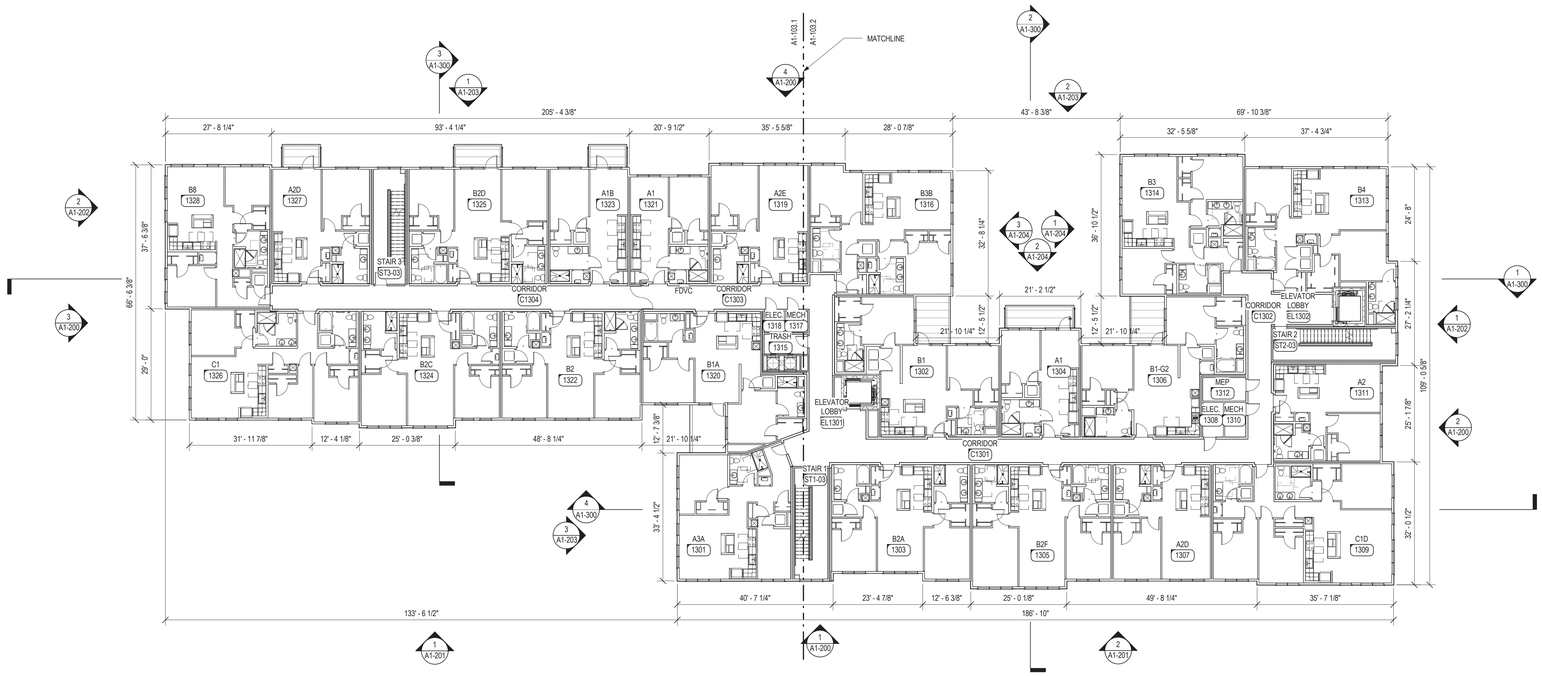

Building 1 - Third Floor Overall
1/16" = 1'-0"

CUBE 3
architecture interiors planning
369 Merrimack Street Lawrence MA 01843
phone: 978.989.9900 www.cube3studio.com

project information:
BROADSTONE
BARE COVE
HINGHAM
230 BEAL ST.
HINGHAM, MA

client information:
Broadstone Bare Cove Alliance, LLC.

C/O Alliance
Residential Company
184 High Street Suite
401 Boston, MA 02110

consultant information:

issuance:
COMPREHENSIVE PERMIT APPLICATION PLANS
NOT FOR CONSTRUCTION

key plan:

drawing information:

drawing by:	BE / AH
drawing checked by:	AB
drawing scale:	1/16" = 1'-0"
drawing date:	12 AUGUST 2017
project number:	15122.00

drawing revisions:

No.	Description	Date
1	Issued for ZBA Resubmittal	10/25/16
2	Issued for ZBA Resubmittal	11/02/16
3	Issued for ZBA Resubmittal	01/04/17
4	Issued for ZBA Resubmittal	01/19/17
5	Issued for ZBA Resubmittal	02/14/17
6	Issued for ZBA Resubmittal	03/29/17
7	Issued for ZBA Resubmittal	04/11/17
8	Modifications to Project Plans	11/02/17

registration:
REGISTERED ARCHITECT
JOHN H. HARDING III
No. 50480
SALEM
MASSACHUSETTS
COMMONWEALTH OF MASSACHUSETTS

drawing name:
Building 1 - Third Floor Plan

drawing number:
A1-103

COPYRIGHT (C) 2017 CUBE 3 STUDIO LLC, ALL RIGHTS RESERVED

BUILDING 1 RENTABLE STORAGE SUMMARY

GARAGE FLOOR - 3
FIRST FLOOR - 6
SECOND FLOOR -0
THIRD FLOOR - 0
FOURTH FLOOR - 5

TOTAL STORAGE SPACES - 14

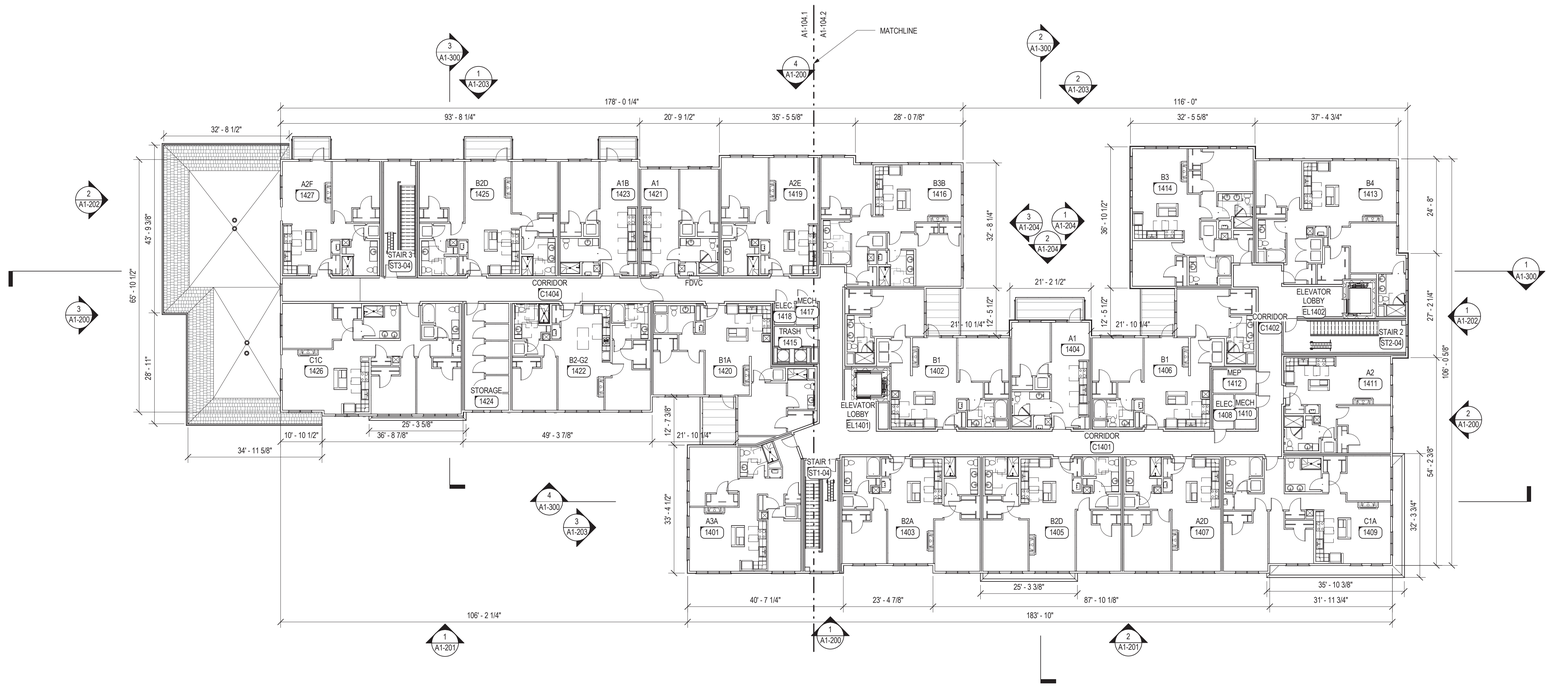

Building 1 - Fourth Floor Overall
1/16" = 1'-0"

CUBE 3
architecture interiors planning
369 Merrimack Street Lawrence MA 01843
phone: 978.989.9900 www.cube3studio.com

project information:

BROADSTONE
BARE COVE
HINGHAM
230 BEAL ST.
HINGHAM, MA

client information:

Broadstone Bare
Cove Alliance, LLC.

C/O Alliance
Residential Company
184 High Street Suite
401 Boston, MA 02110

consultant information:

issuance:

COMPREHENSIVE
PERMIT
APPLICATION PLANS

NOT FOR
CONSTRUCTION

key plan:

drawing information:

drawing by:	BE / AH
drawing checked by:	AB
drawing scale:	1/16" = 1'-0"
drawing date:	12 AUGUST 2017
project number:	15122.00

drawing revisions:

No.	Description	Date
1	Issued for ZBA Resubmittal	10/25/16
2	Issued for ZBA Resubmittal	11/02/16
3	Issued for ZBA Resubmittal	01/04/17
4	Issued for ZBA Resubmittal	01/19/17
5	Issued for ZBA Resubmittal	02/14/17
6	Issued for ZBA Resubmittal	03/29/17
7	Issued for ZBA Resubmittal	04/11/17
8	Modifications to Project Plans	11/02/17

registration:

REGISTERED ARCHITECT
JOHN H. HARDIG III
No. 50480
SALEM
MASSACHUSETTS
COMMONWEALTH OF MASSACHUSETTS

drawing name:

Building 1 -
Fourth
Floor Plan

drawing number:

A1-104

COPYRIGHT (C) 2017 CUBE 3 STUDIO LLC, ALL RIGHTS RESERVED

EXTERIOR MATERIALS LEGEND	
1	FIBER CEMENT PANEL W/ ALUMINUM REVEAL SYSTEM - COLOR 1
2	FIBER CEMENT LAP SIDING W/ 8" EXPOSURE - COLOR 2
2A	FIBER CEMENT LAP SIDING W/ 8" EXPOSURE - COLOR 3
3	FIBER CEMENT SHAKE SHINGLE - COLOR 4
4	CONCRETE WALL
5	CMU WALL

GENERAL NOTES

1. ALL HORIZONTAL TRIM BANDS TO BE 5/4" x 12" NOM. FIBER CEMENT TRIM.
2. ALL TRIM TO BE PAINTED TO MATCH FIBER CEMENT PANEL SIDING - SIDING COLOR 1, U.N.O.
3. ALL WINDOW TRIM LOCATED IN FIBER CEMENT LAP SIDING CALLED OUT AS MATERIAL TYPE 2 ON THE ELEVATIONS, TO BE PAINTED TO MATCH WINDOW COLOR TYPE B, U.N.O.
4. ALL WINDOW TRIM LOCATED IN FIBER CEMENT LAP SIDING CALLED OUT AS MATERIAL TYPE 2A ON THE ELEVATIONS, TO BE PAINTED TO MATCH WINDOW COLOR TYPE C, U.N.O.
5. ALL WINDOW TRIM LOCATED IN FIBER CEMENT CEDAR SHAKE SIDING CALLED OUT AS MATERIAL TYPE 3 ON THE ELEVATIONS, TO BE PAINTED TO MATCH WINDOW COLOR TYPE A, U.N.O
6. ALL MEP ITEMS (EXHAUST/ CONCENTRIC VENTS, MECHANICAL INTAKE/EXHAUST LOUVERS, ETC.) AND THEIR RELATING TRIM TO BE PAINTED TO MATCH ADJACENT SIDING/ TRIM COLOR U.N.O.
7. REFER TO SHEET A-061 FOR TYPICAL WINDOW TYPE ELEVATIONS AND COLORS.
8. GUTTERS AND DOWNSPOUTS TO BE INSTALLED AT ALL SLOPING ROOF FASCIA, U.N.O.
9. ALL GUTTERS AND DOWNSPOUTS TO BE PAINTED TO MATCH ADJACENT TRIM OR SIDING COLOR, U.N.O.

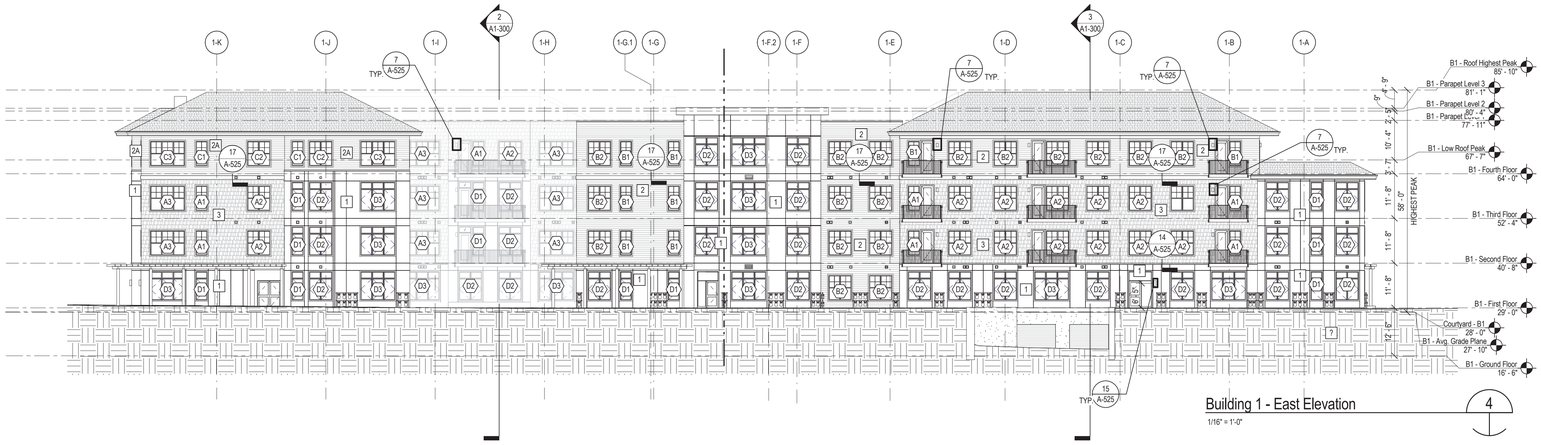

Building 1 - East Elevation 4

1/16" = 1'-0"

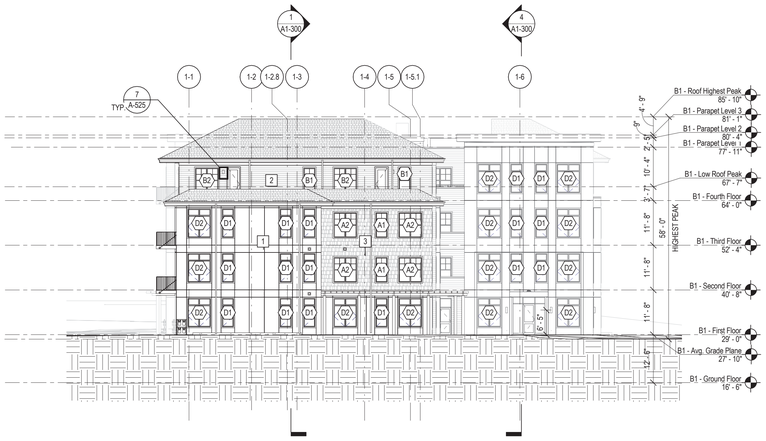

Building 1 - North Elevation 3

1/16" = 1'-0"

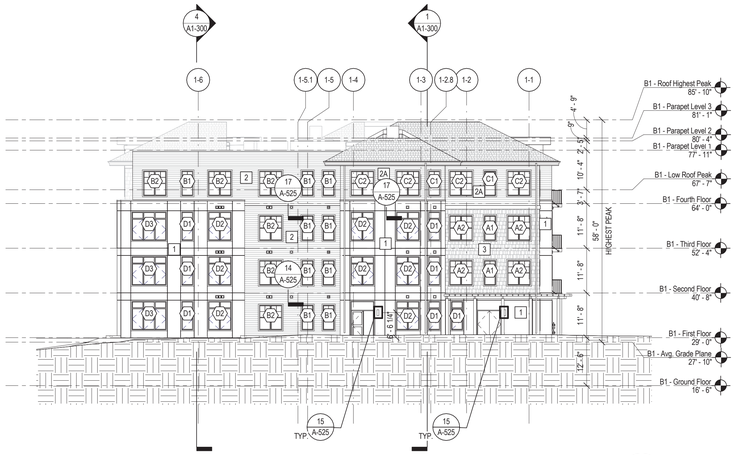

Building 1 - South Elevation 2

1/16" = 1'-0"

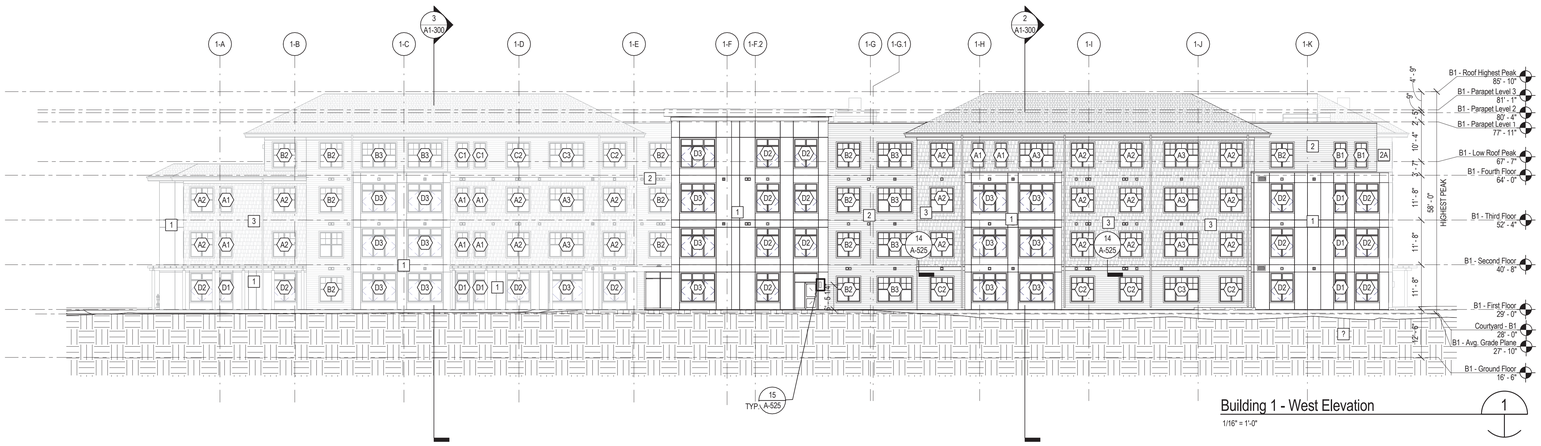

Building 1 - West Elevation 1

1/16" = 1'-0"

CUBE 3
architecture interiors planning
360 Merrimack Street Lawrence MA 01843
phone: 978.989.9900 www.cube3studio.com

project information

BROADSTONE BARE COVE HINGHAM
230 BEAL ST.
HINGHAM, MA

client information

Broadstone Bare Cove Alliance, LLC.

C/O Alliance Residential Company
184 High Street Suite
401 Boston, MA 02110

consultant information

issuance

COMPREHENSIVE PERMIT APPLICATION PLANS

NOT FOR CONSTRUCTION

key plan

drawing information

drawing by:	BE / AH
drawing checked by:	AB
drawing scale:	As indicated
drawing date:	12 AUGUST 2017
project number:	15122.00

drawing revisions:

No.	Description	Date
1	Issued for ZBA Resubmittal	10/25/16
2	Issued for ZBA Resubmittal	11/02/16
3	Issued for ZBA Resubmittal	01/04/17
4	Issued for ZBA Resubmittal	01/19/17
5	Issued for ZBA Resubmittal	02/14/17
6	Issued for ZBA Resubmittal	03/29/17
7	Issued for ZBA Resubmittal	04/11/17
8	Modifications to Project Plans	11/02/17

registration

REGISTERED ARCHITECT
JOHN H. HARDIG JR.
No. 504480
SALEM
MASSACHUSETTS
COMMONWEALTH OF MASSACHUSETTS

drawing name

Building 1 - Exterior Elevations

drawing number

A1-200

COPYRIGHT (C) 2017 CUBE 3 STUDIO LLC, ALL RIGHTS RESERVED

CUBE 3
architecture interiors planning
360 Merrimack Street Lawrence MA 01843
phone: 978.989.9900 www.cube3studio.com

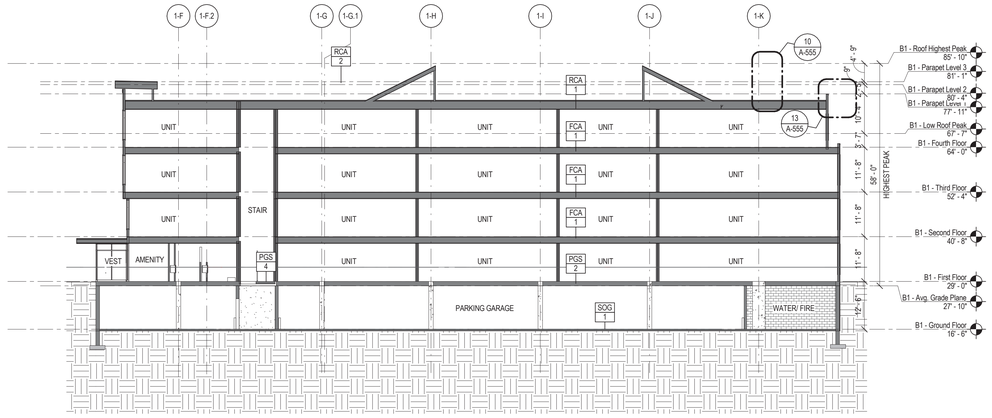

B1 - East - West Section 2 — 4
1/16" = 1'-0"

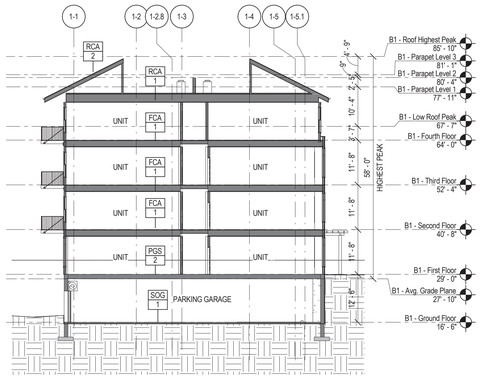

B1 - North - South Section 2 — 3
1/16" = 1'-0"

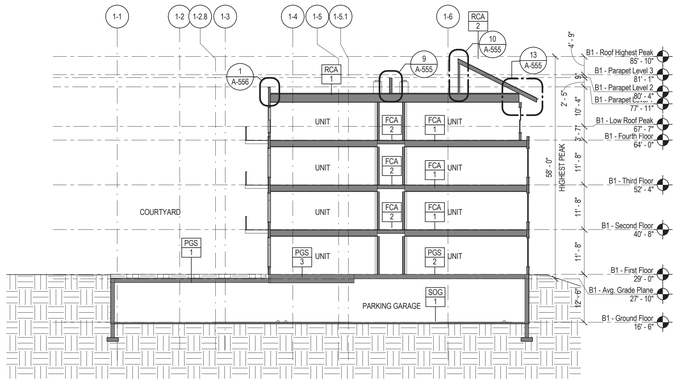

B1 - North - South Section — 2
1/16" = 1'-0"

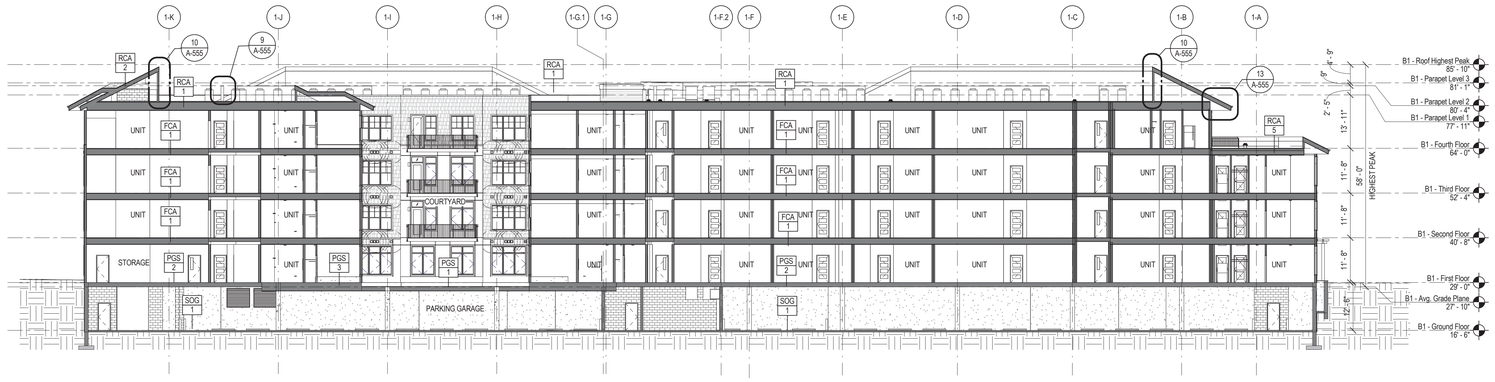

B1 - East - West Section — 1
1/16" = 1'-0"

project information

BROADSTONE
BARE COVE
HINGHAM
230 BEAL ST.
HINGHAM, MA

client information

Broadstone Bare
Cove Alliance, LLC.

C/O Alliance
Residential Company
184 High Street Suite
401 Boston, MA 02110

consultant information

issuance

COMPREHENSIVE
PERMIT
APPLICATION PLANS

NOT FOR
CONSTRUCTION

key plan

drawing information

drawing by:	BE / AH
drawing checked by:	AB
drawing scale:	1/16" = 1'-0"
drawing date:	12 AUGUST 2017
project number:	15122.00

drawing revisions:

No.	Description	Date
1	Issued for ZBA Resubmittal	10/25/16
2	Issued for ZBA Resubmittal	11/02/16
3	Issued for ZBA Resubmittal	01/04/17
4	Issued for ZBA Resubmittal	01/19/17
5	Issued for ZBA Resubmittal	02/14/17
6	Issued for ZBA Resubmittal	03/29/17
7	Issued for ZBA Resubmittal	04/11/17
8	Modifications to Project Plans	11/02/17

registration

drawing name

Building 1 -
Sections

drawing number

A1-300

COPYRIGHT (C) 2017 CUBE 3 STUDIO LLC, ALL RIGHTS RESERVED

VEHICULAR TRAFFIC COATING

VEHICUAR TRAFFIC COATING, SPEC A

VEHICUAR TRAFFIC COATING, SPEC B

NOTES:
1. REFER TO MANUFACTURER'S RECOMMENDED DETAILS FOR VEHICULAR TRAFFIC COATING TERMINATION AND PENETRATIONS.
2. REFER TO MANUFACTURER'S RECOMMENDATIONS FOR PROPOER THICKNESS OF VEHICULAR TRAFFIC COATING.

BUILDING 2 RENTABLE STORAGE SUMMARY

GARAGE FLOOR - 18
FIRST FLOOR - 19
SECOND FLOOR -9
THIRD FLOOR - 9
FOURTH FLOOR - 9

TOTAL STORAGE SPACES - 64

BUILDING 2 PARKING SUMMARY

STANDARD - 150
ACCESIBLE - 6
VAN ACCESSIBLE - 2
ELECTRIC CAR STATION - 4

TOTAL CAR SPACES - 162
BIKE RACKS - 14 (28 Bikes)

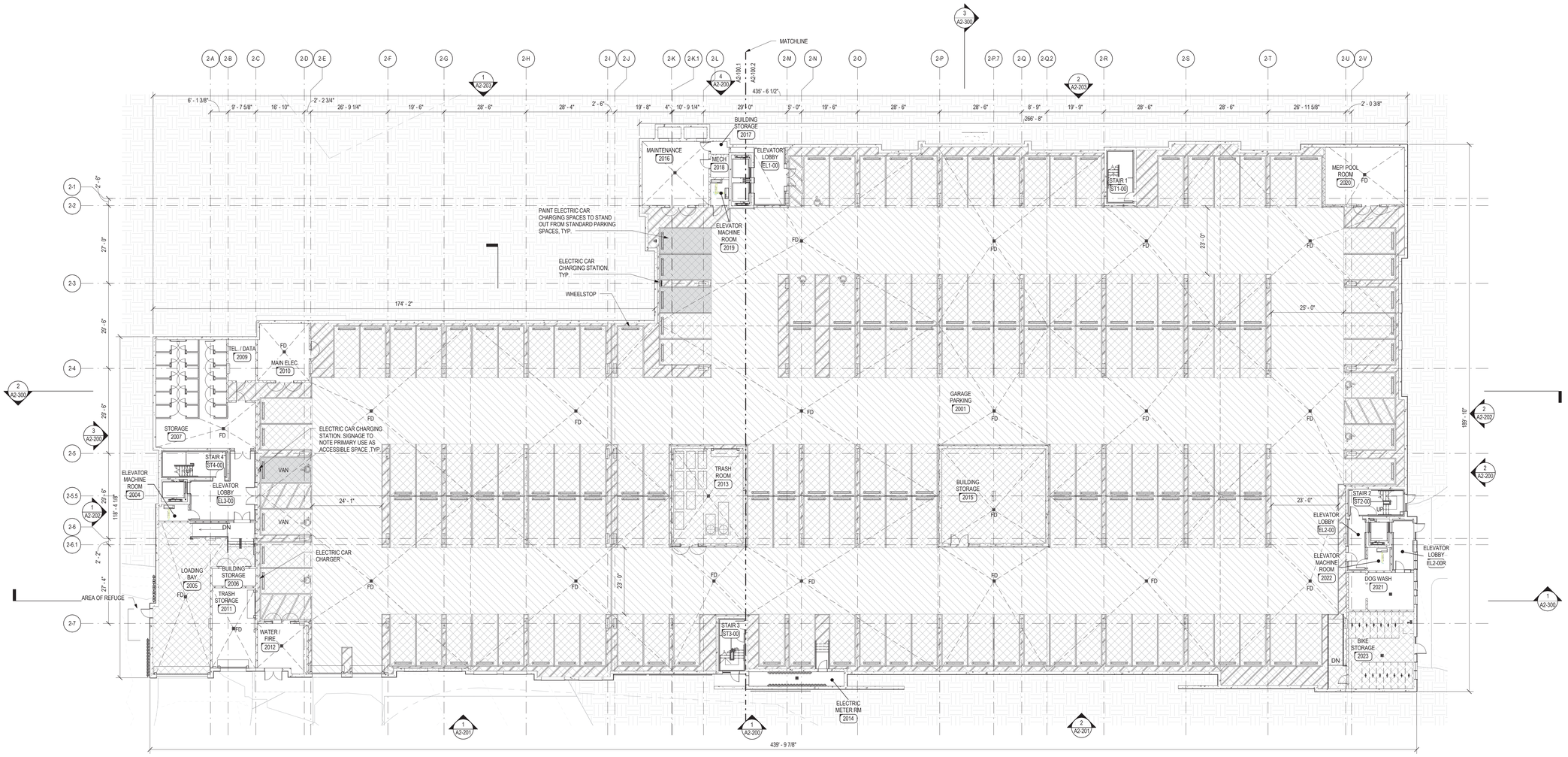

NOTE: PROVIDE 6" BOLLARDS AT LEADING EDGE OF ALL MASONRY AND CONCRETE WALL IN GARAGE, TYPICAL

Building 2 - Ground Floor Overall
1/16" = 1'-0"

1

CUBE 3
architecture interiors planning
369 Merrimack Street Lawrence MA 01843
phone: 978.989.9900 www.cube3studio.com

project information

BROADSTONE
BARE COVE
HINGHAM
230 BEAL ST.
HINGHAM, MA

client information

Broadstone Bare Cove Alliance, LLC.

C/O Alliance
Residential Company
184 High Street Suite
401 Boston, MA 02110

consultant information

issuance

COMPREHENSIVE PERMIT APPLICATION PLANS

NOT FOR CONSTRUCTION

key plan

drawing information

drawing by:	BE / AH
drawing checked by:	AB
drawing scale:	As indicated
drawing date:	12 AUGUST 2017
project number:	15122.00

drawing revisions:

No.	Description	Date
1	Issued for ZBA Resubmittal	10/25/16
2	Issued for ZBA Resubmittal	11/02/16
3	Issued for ZBA Resubmittal	01/04/17
4	Issued for ZBA Resubmittal	01/19/17
5	Issued for ZBA Resubmittal	02/14/17
6	Issued for ZBA Resubmittal	03/29/17
7	Issued for ZBA Resubmittal	04/11/17
8	Modifications to Project Plans	11/02/17

registration

REGISTERED ARCHITECT
JOHN H. HARDING III
No. 50489
SALEM
MASSACHUSETTS
COMMONWEALTH OF MASSACHUSETTS

drawing name:

Building 2 - Garage Floor Plan

drawing number:

A2-100

COPYRIGHT (C) 2017 CUBE 3 STUDIO LLC, ALL RIGHTS RESERVED

BUILDING 2 RENTABLE STORAGE SUMMARY

GARAGE FLOOR - 18
FIRST FLOOR - 19
SECOND FLOOR -9
THIRD FLOOR - 9
FOURTH FLOOR - 9

TOTAL STORAGE SPACES - 64

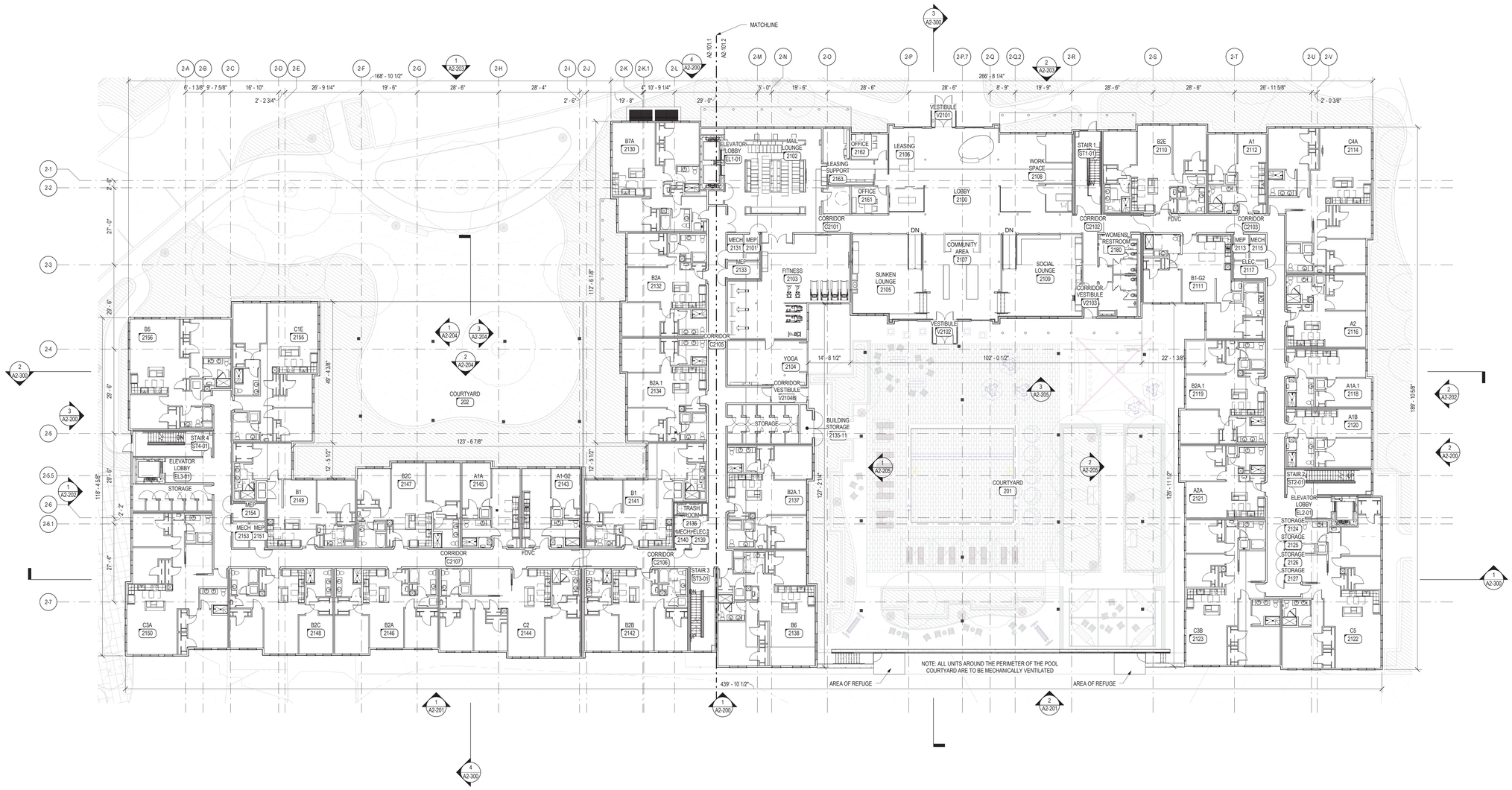

Building 2 - First Floor Overall
1/16" = 1'-0"

CUBE 3
architecture interiors planning
369 Merrimack Street Lawrence MA 01843
phone: 978.989.9900 www.cube3studio.com

project information:

BROADSTONE BARE COVE HINGHAM
230 BEAL ST.
HINGHAM, MA

client information:

Broadstone Bare Cove Alliance, LLC.

C/O Alliance Residential Company
184 High Street Suite 401 Boston, MA 02110

consultant information:

issuance:

COMPREHENSIVE PERMIT APPLICATION PLANS

NOT FOR CONSTRUCTION

key plan:

drawn information:

drawing by:	BE / AH
drawing checked by:	AB
drawing scale:	1/16" = 1'-0"
drawing date:	12 AUGUST 2017
project number:	15122.00

drawing revisions:

No.	Description	Date
1	Issued for ZBA Resubmittal	10/25/16
2	Issued for ZBA Resubmittal	11/02/16
3	Issued for ZBA Resubmittal	01/04/17
4	Issued for ZBA Resubmittal	01/19/17
5	Issued for ZBA Resubmittal	02/14/17
6	Issued for ZBA Resubmittal	03/29/17
7	Issued for ZBA Resubmittal	04/11/17
8	Modifications to Project Plans	11/02/17

registration:

REGISTERED ARCHITECT
JOHN H. HARDY III
No. 50480
SALEM
MASSACHUSETTS
COMMONWEALTH OF MASSACHUSETTS

drawing name:

Building 2 - First Floor Plan

drawing number:

A2-101

COPYRIGHT (C) 2017 CUBE 3 STUDIO LLC, ALL RIGHTS RESERVED

BUILDING 2 RENTABLE STORAGE SUMMARY

GARAGE FLOOR - 18
FIRST FLOOR - 19
SECOND FLOOR -9
THIRD FLOOR - 9
FOURTH FLOOR - 9

TOTAL STORAGE SPACES - 64

Building 2 - Second Floor Overall
1/16" = 1'-0"

CUBE 3
architecture interiors planning
369 Merrimack Street Lawrence MA 01843
phone: 978.989.9900 www.cube3studio.com

project information:
BROADSTONE BARE COVE HINGHAM
230 BEAL ST.
HINGHAM, MA

client information:
Broadstone Bare Cove Alliance, LLC.

C/O Alliance Residential Company
184 High Street Suite 401 Boston, MA 02110

consultant information:

sequence:
COMPREHENSIVE PERMIT APPLICATION PLANS
NOT FOR CONSTRUCTION

key plan:

drawing information:

drawing by:	BE / AH
drawing checked by:	AB
drawing scale:	1/16" = 1'-0"
drawing date:	12 AUGUST 2017
project number:	15122.00

drawing revisions:

No.	Description	Date
1	Issued for ZBA Resubmittal	10/25/16
2	Issued for ZBA Resubmittal	11/02/16
3	Issued for ZBA Resubmittal	01/04/17
4	Issued for ZBA Resubmittal	01/19/17
5	Issued for ZBA Resubmittal	02/14/17
6	Issued for ZBA Resubmittal	03/29/17
7	Issued for ZBA Resubmittal	04/11/17
8	Modifications to Project Plans	11/02/17

registration:
REGISTERED ARCHITECT JOHN H. HARDING III No. 50480 SALEM MASSACHUSETTS COMMONWEALTH OF MASSACHUSETTS

drawing name:
Building 2 - Second Floor Plan

drawing number:
A2-102

COPYRIGHT (C) 2017 CUBE 3 STUDIO LLC, ALL RIGHTS RESERVED

BUILDING 2 RENTABLE STORAGE SUMMARY

GARAGE FLOOR - 18
FIRST FLOOR - 19
SECOND FLOOR -9
THIRD FLOOR - 9
FOURTH FLOOR - 9

TOTAL STORAGE SPACES - 64

Building 2 - Third Floor Overall
1/16" = 1'-0"

1

CUBE 3
architecture interiors planning
369 Merrimack Street Lawrence MA 01843
phone: 978.989.9909 www.cube3studio.com

project information:
BROADSTONE
BARE COVE
HINGHAM
230 BEAL ST.
HINGHAM, MA

client information:
Broadstone Bare
Cove Alliance, LLC.

C/O Alliance
Residential Company
184 High Street Suite
401 Boston, MA 02110

sequence:
COMPREHENSIVE
PERMIT
APPLICATION PLANS
NOT FOR
CONSTRUCTION

drawing information:

drawing by:	BE / AH
drawing checked by:	AB
drawing scale:	1/16" = 1'-0"
drawing date:	12 AUGUST 2017
project number:	15122.00

drawing revisions:

No.	Description	Date
1	Issued for ZBA Resubmittal	10/25/16
2	Issued for ZBA Resubmittal	11/02/16
3	Issued for ZBA Resubmittal	01/04/17
4	Issued for ZBA Resubmittal	01/19/17
5	Issued for ZBA Resubmittal	02/14/17
6	Issued for ZBA Resubmittal	03/29/17
7	Issued for ZBA Resubmittal	04/11/17
8	Modifications to Project Plans	11/02/17

registration:
REGISTERED ARCHITECT
JOHN H. HARDING
No. 50480
SALEM
MASSACHUSETTS
COMMONWEALTH OF MASSACHUSETTS

drawing name:
Building 2 - Third Floor Plan

drawing number:
A2-103

COPYRIGHT (C) 2017 CUBE 3 STUDIO LLC, ALL RIGHTS RESERVED

BUILDING 2 RENTABLE STORAGE SUMMARY

GARAGE FLOOR - 18
FIRST FLOOR - 19
SECOND FLOOR -9
THIRD FLOOR - 9
FOURTH FLOOR - 9

TOTAL STORAGE SPACES - 64

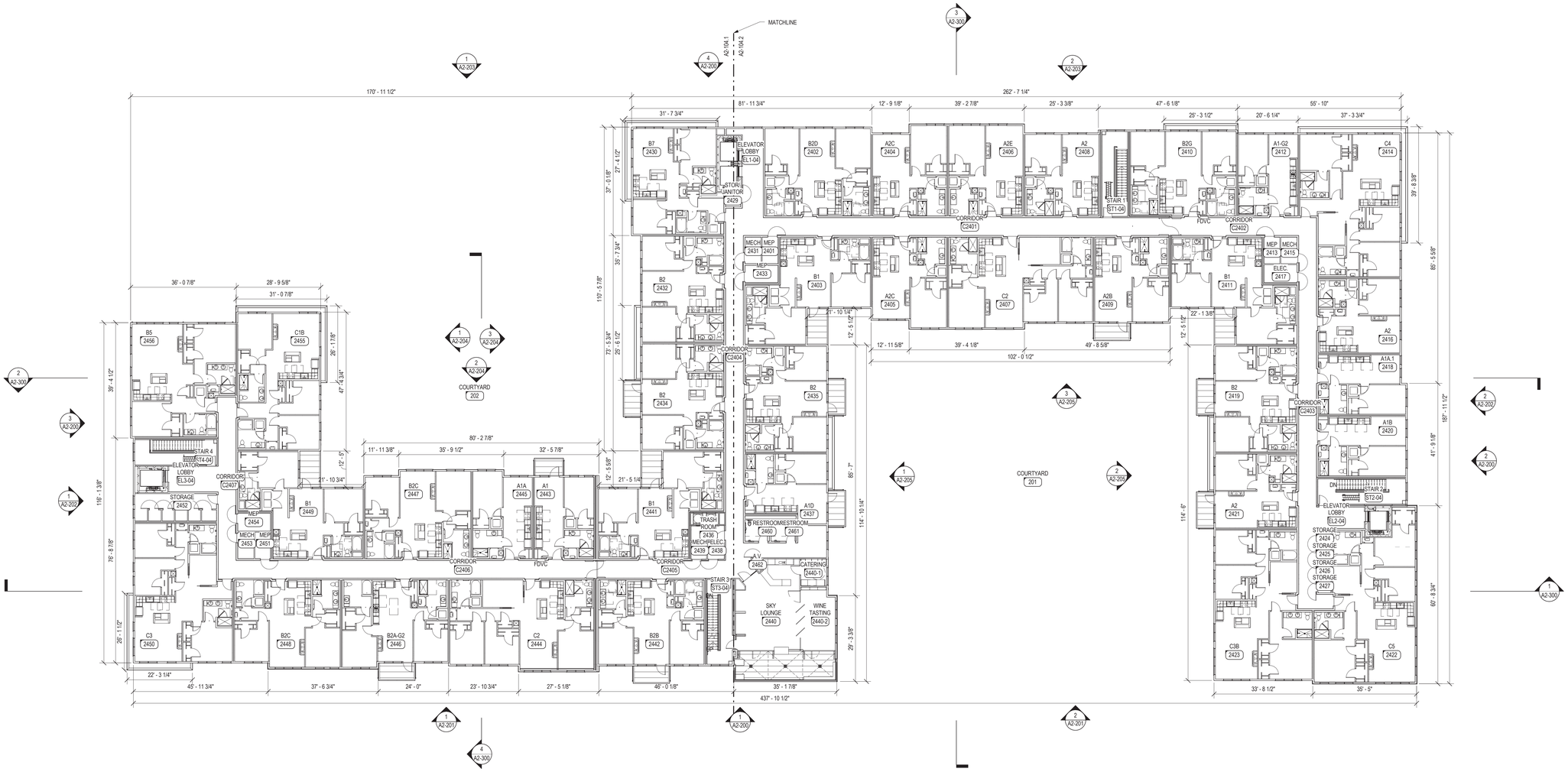

CUBE 3
architecture interiors planning
369 Merrimack Street Lawrence MA 01843
phone: 978.989.9900 www.cube3studio.com

project information:
BROADSTONE BARE COVE HINGHAM
230 BEAL ST.
HINGHAM, MA

client information:
Broadstone Bare Cove Alliance, LLC.

C/O Alliance Residential Company
184 High Street Suite 401 Boston, MA 02110

consultant information:

sequence:
COMPREHENSIVE PERMIT APPLICATION PLANS

NOT FOR CONSTRUCTION

key plan:

drawing information:

drawing by:	BE / AH
drawing checked by:	AB
drawing scale:	1/16" = 1'-0"
drawing date:	12 AUGUST 2017
project number:	15122.00

drawing revisions:

No.	Description	Date
1	Issued for ZBA Resubmittal	10/25/16
2	Issued for ZBA Resubmittal	11/02/16
3	Issued for ZBA Resubmittal	01/04/17
4	Issued for ZBA Resubmittal	01/19/17
5	Issued for ZBA Resubmittal	02/14/17
6	Issued for ZBA Resubmittal	03/29/17
7	Issued for ZBA Resubmittal	04/11/17
8	Modifications to Project Plans	11/02/17

registration:

drawing name:
Building 2 - Fourth Floor Plan

Building 2 - Fourth Floor Overall 1
1/16" = 1'-0"

drawing number:
A2-104

COPYRIGHT (C) 2017 CUBE 3 STUDIO LLC, ALL RIGHTS RESERVED

EXTERIOR MATERIALS LEGEND	
1	FIBER CEMENT PANEL W/ ALUMINUM REVEAL SYSTEM - COLOR 1
2	FIBER CEMENT LAP SIDING W/ 8" EXPOSURE - COLOR 2
2A	FIBER CEMENT LAP SIDING W/ 8" EXPOSURE - COLOR 3
3	FIBER CEMENT SHAKE SHINGLE - COLOR 4
4	CONCRETE WALL
5	CMU WALL

GENERAL NOTES

1. ALL HORIZONTAL TRIM BANDS TO BE 5/4" x 12" NOM. FIBER CEMENT TRIM.
2. ALL TRIM TO BE PAINTED TO MATCH FIBER CEMENT PANEL SIDING - SIDING COLOR 1, U.N.O.
3. ALL WINDOW TRIM LOCATED IN FIBER CEMENT LAP SIDING CALLED OUT AS MATERIAL TYPE 2 ON THE ELEVATIONS, TO BE PAINTED TO MATCH WINDOW COLOR TYPE B, U.N.O.
4. ALL WINDOW TRIM LOCATED IN FIBER CEMENT LAP SIDING CALLED OUT AS MATERIAL TYPE 2A ON THE ELEVATIONS, TO BE PAINTED TO MATCH WINDOW COLOR TYPE C, U.N.O.
5. ALL WINDOW TRIM LOCATED IN FIBER CEMENT CEDAR SHAKE SIDING CALLED OUT AS MATERIAL TYPE 3 ON THE ELEVATIONS, TO BE PAINTED TO MATCH WINDOW COLOR TYPE A, U.N.O
6. ALL MEP ITEMS (EXHAUST/ CONCENTRIC VENTS, MECHANICAL INTAKE/EXHAUST LOUVERS, ETC.) AND THEIR RELATING TRIM TO BE PAINTED TO MATCH ADJACENT SIDING/ TRIM COLOR U.N.O.
7. REFER TO SHEET A-061 FOR TYPICAL WINDOW TYPE ELEVATIONS AND COLORS.
8. GUTTERS AND DOWNSPOUTS TO BE INSTALLED AT ALL SLOPING ROOF FASCIA, U.N.O.
9. ALL GUTTERS AND DOWNSPOUTS TO BE PAINTED TO MATCH ADJACENT TRIM OR SIDING COLOR, U.N.O.

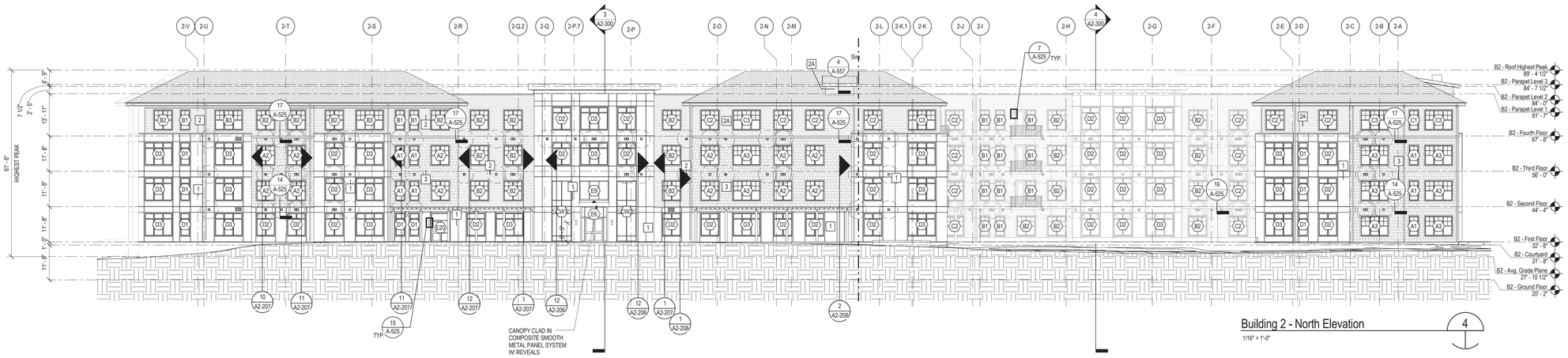

Building 2 - North Elevation 4

1/16" = 1'-0"

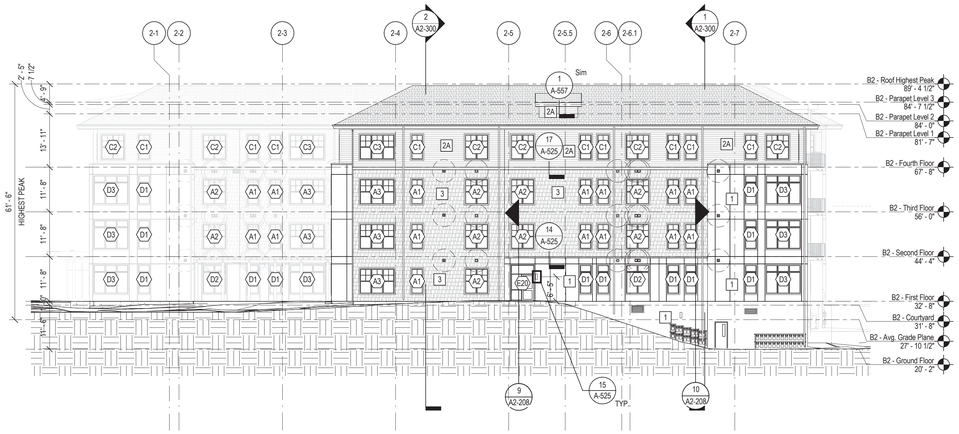

Building 2 - West Elevation 3

1/16" = 1'-0"

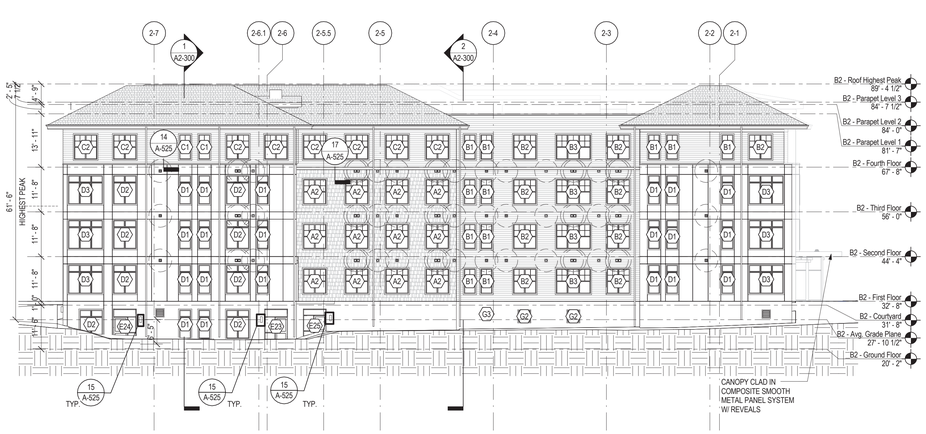

Building 2 - East Elevation 2

1/16" = 1'-0"

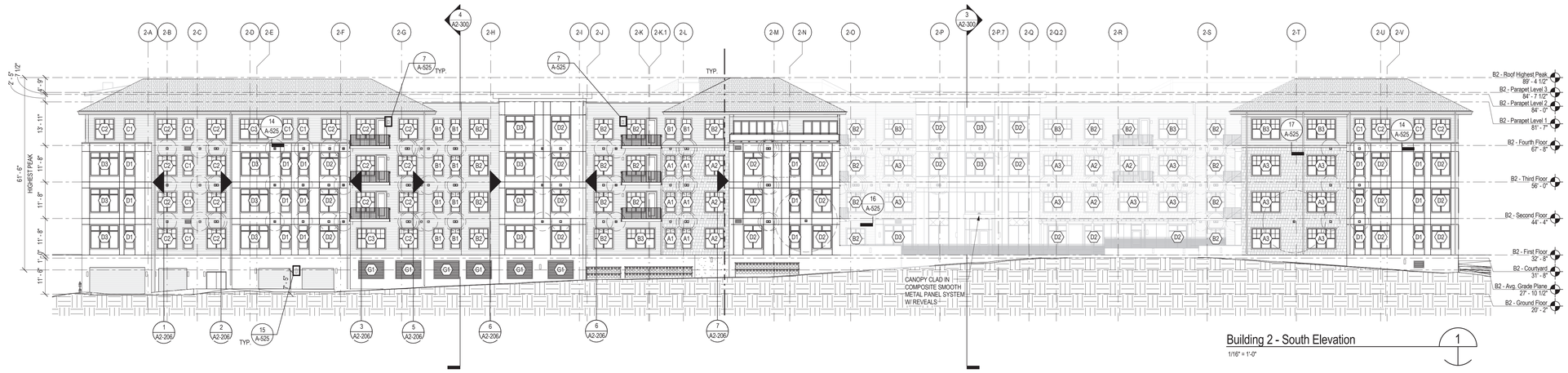

Building 2 - South Elevation 1

1/16" = 1'-0"

CUBE 3
architecture interiors planning
369 Merrimack Street Lawrence MA 01843
phone: 978.989.9900 www.cube3studio.com

project information

BROADSTONE BARE COVE HINGHAM
230 BEAL ST.
HINGHAM, MA

client information

Broadstone Bare Cove Alliance, LLC.

C/O Alliance Residential Company
184 High Street Suite
401 Boston, MA 02110

consultant information

issuance

COMPREHENSIVE PERMIT APPLICATION PLANS

NOT FOR CONSTRUCTION

key plan

drawing information

drawing by:	BE / AH
drawing checked by:	AB
drawing scale:	As indicated
drawing date:	12 AUGUST 2017
project number:	15122.00

drawing revisions:

No.	Description	Date
1	Issued for ZBA Resubmittal	10/25/16
2	Issued for ZBA Resubmittal	11/02/16
3	Issued for ZBA Resubmittal	01/04/17
4	Issued for ZBA Resubmittal	01/19/17
5	Issued for ZBA Resubmittal	02/14/17
6	Issued for ZBA Resubmittal	03/29/17
7	Issued for ZBA Resubmittal	04/11/17
8	Modifications to Project Plans	11/02/17

registration

REGISTERED ARCHITECT JOHN H. HARDY No. 50480 SALEM MASSACHUSETTS COMMONWEALTH OF MASSACHUSETTS

drawing name

Building 2 - Exterior Elevations

drawing number

A2-200

COPYRIGHT (C) 2017 CUBE 3 STUDIO LLC, ALL RIGHTS RESERVED

CUBE 3
architecture interiors planning
360 Merrimack Street Lawrence MA 01843
phone: 978.989.9900 www.cube3studio.com

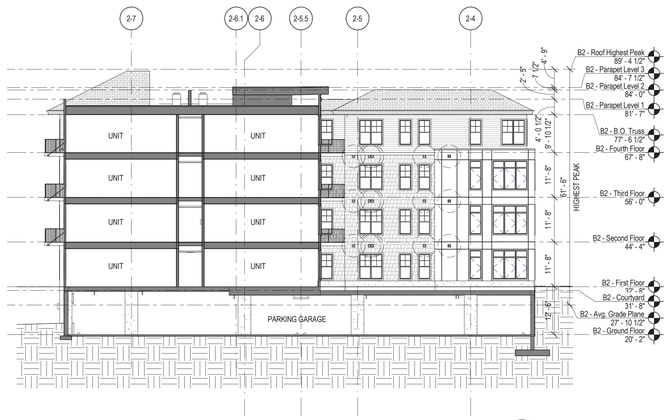

B2 - North - South Section 2 — 4
1/16" = 1'-0"

B2 - North - South Section — 3
1/16" = 1'-0"

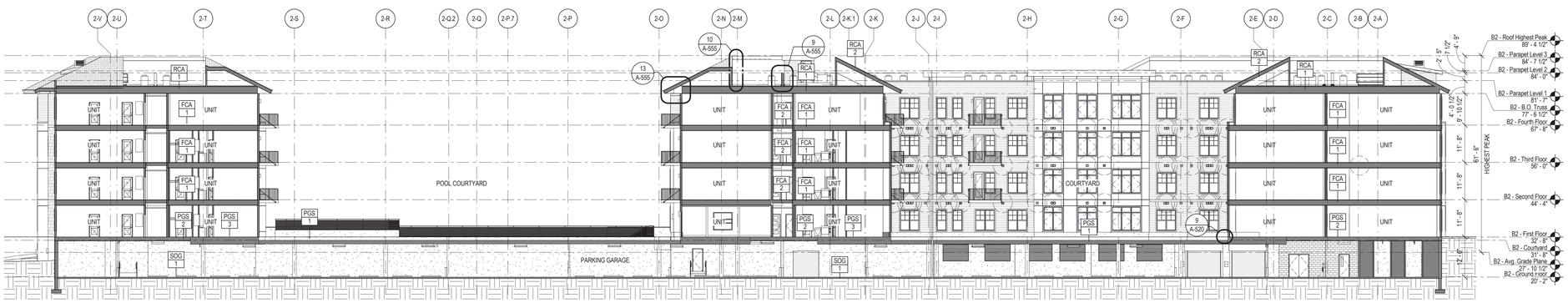

B2 - West - East Section — 2
1/16" = 1'-0"

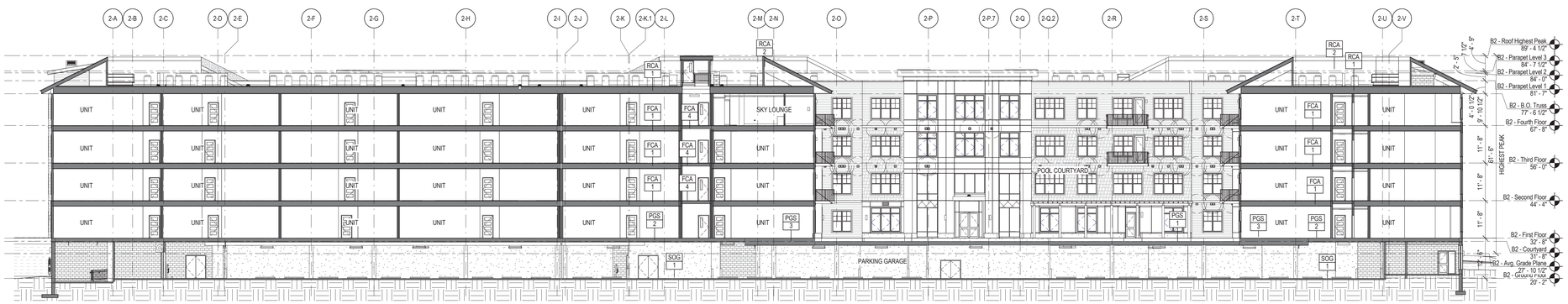

B2 - East - West Section — 1
1/16" = 1'-0"

project information

BROADSTONE
BARE COVE
HINGHAM
230 BEAL ST.
HINGHAM, MA

client information

Broadstone Bare
Cove Alliance, LLC.

C/O Alliance
Residential Company
184 High Street Suite
401 Boston, MA 02110

issuance

COMPREHENSIVE
PERMIT
APPLICATION PLANS

NOT FOR
CONSTRUCTION

drawing information

drawing by:	BE / BA
drawing checked by:	AB
drawing scale:	1/16" = 1'-0"
drawing date:	12 AUGUST 2017
project number:	15122.00

drawing revisions:

No.	Description	Date
1	Issued for ZBA Resubmittal	10/25/16
2	Issued for ZBA Resubmittal	11/02/16
3	Issued for ZBA Resubmittal	01/04/17
4	Issued for ZBA Resubmittal	01/19/17
5	Issued for ZBA Resubmittal	02/14/17
6	Issued for ZBA Resubmittal	03/29/17
7	Issued for ZBA Resubmittal	04/11/17
8	Modifications to Project Plans	11/02/17

registration

REGISTERED ARCHITECT
JOHN H. HARDY
No. 50480
SALEM
MASSACHUSETTS

drawing name

Building 2 -
Sections

drawing number

A2-300

COPYRIGHT (C) 2017 CUBE 3 STUDIO LLC, ALL RIGHTS RESERVED

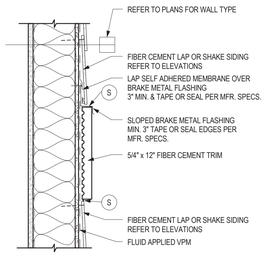

Typical 12" Trim at Lap to Lap / Lap to Shake Siding — 17
1 1/2" = 1'-0"

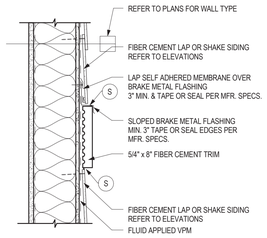

Typical 8" Trim at Lap to Lap / Lap to Shake Siding — 16
1 1/2" = 1'-0"

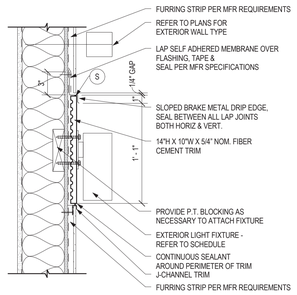

Typical Detail at Exterior Light Fixture at F.C. Panel — 15
1 1/2" = 1'-0"

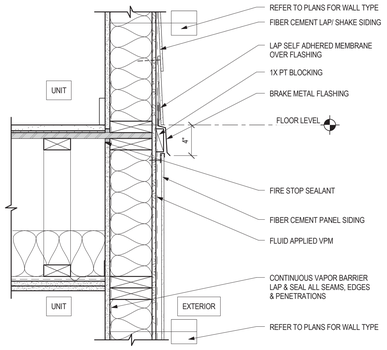

Detail at Transition from Lap / Shake Siding to FC Panel — 14
1 1/2" = 1'-0"

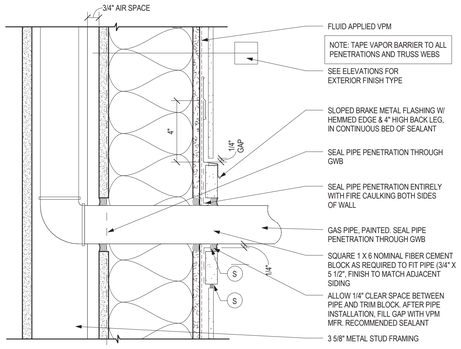

Gas Pipe Penetration at Fiber Cement Siding — 12
3" = 1'-0"

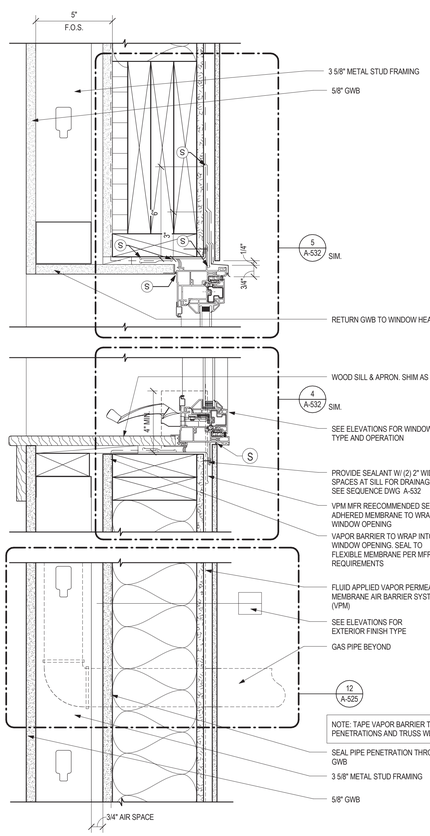

Typ. Window Head/Sill at Furred-Out Wall for Gas Pipe — 13
3" = 1'-0"

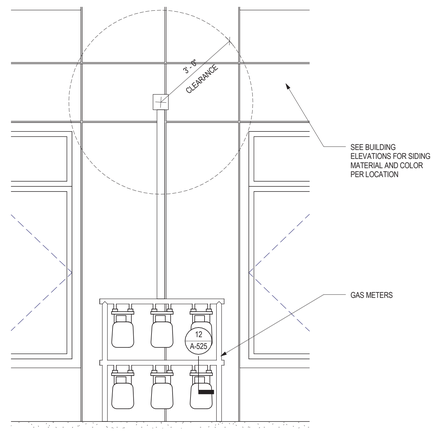

Typical Gas Meter Elevation — 11
1/2" = 1'-0"

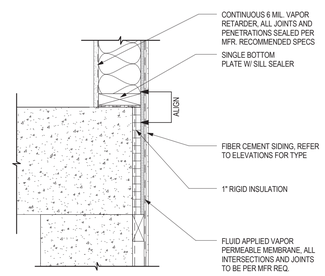

Detail @ Ext. Wall/Conc. Slab — 10
1 1/2" = 1'-0"

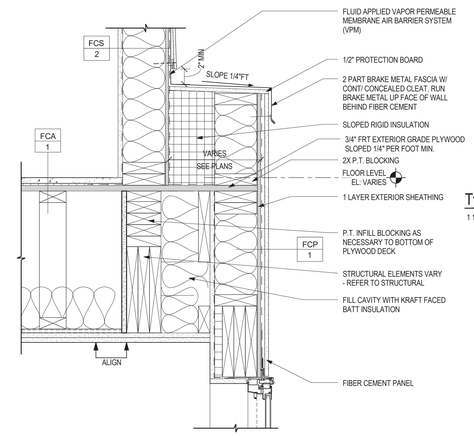

Detail at Bottom of Panel Inset — 9
1 1/2" = 1'-0"

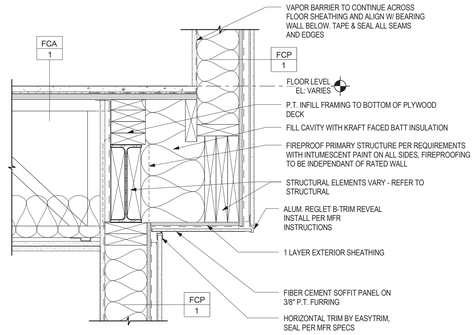

Detail at Top of Panel Inset/Parallel Framing — 8
1 1/2" = 1'-0"

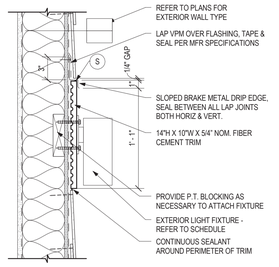

Typical Detail at Exterior Light Fixture at F.C. Lap/Shake Siding — 7
1 1/2" = 1'-0"

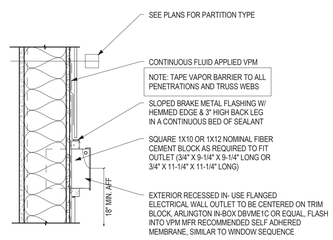

Mounting Detail At Exterior Electrical Outlet — 6
1 1/2" = 1'-0"

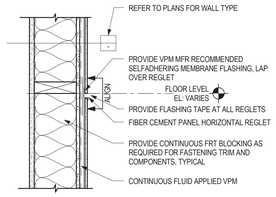

Typical Vertical Detail at Floor at F.C. Panel Joint — 5
1 1/2" = 1'-0"

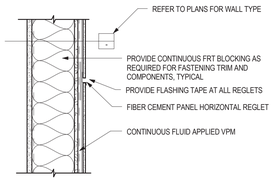

Typical Vertical Detail at F.C. Panel Joint — 4
1 1/2" = 1'-0"

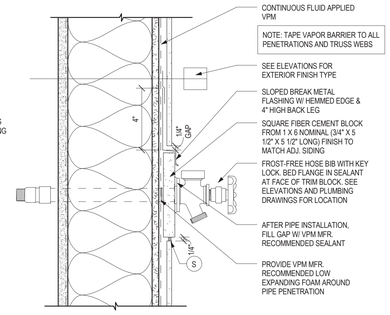

Hose Bibb at Fiber Cement — 3
3" = 1'-0"

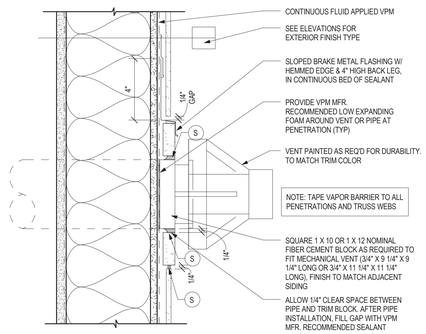

Concentric Vent or Pipe Penetration — 2
3" = 1'-0"

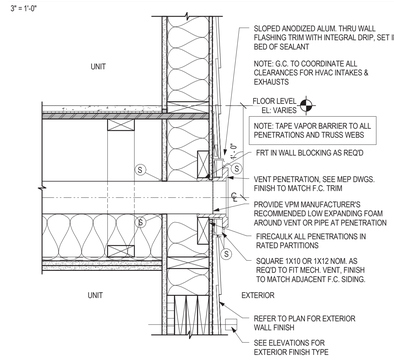

Typical Vent Penetrations — 1
1 1/2" = 1'-0"

CUBE 3
architecture interiors planning
360 Merrimack Street Lawrence MA 01843
phone: 978.989.9900 www.cube3studio.com

project information

BROADSTONE BARE COVE HINGHAM
230 BEAL ST.
HINGHAM, MA

client information

Broadstone Bare Cove Alliance, LLC.

C/O Alliance Residential Company
184 High Street Suite 401 Boston, MA 02110

consultant information

sequence

COMPREHENSIVE PERMIT APPLICATION PLANS

NOT FOR CONSTRUCTION

key plan

drawing information

drawing by:	BE / AH
drawing checked by:	AB
drawing scale:	As indicated
drawing date:	12 AUGUST 2017
project number:	15122.00

drawing revisions:

No.	Description	Date
1	Issued for ZBA Resubmittal	10/25/16
2	Issued for ZBA Resubmittal	11/02/16
3	Issued for ZBA Resubmittal	01/04/17
4	Issued for ZBA Resubmittal	01/19/17
5	Issued for ZBA Resubmittal	02/14/17
6	Issued for ZBA Resubmittal	03/29/17
7	Issued for ZBA Resubmittal	04/11/17
8	Modifications to Project Plans	11/02/17

registration

REGISTERED ARCHITECT JOHN H. HARDY No. 50480 SALEM MASSACHUSETTS

drawing name

Vertical Exterior Details

drawing number

A-525

COPYRIGHT (C) 2017 CUBE 3 STUDIO LLC, ALL RIGHTS RESERVED