COMPREHENSIVE PERMIT PLAN

KNOWN AS

RIVER STONE
OF
HINGHAM, MA

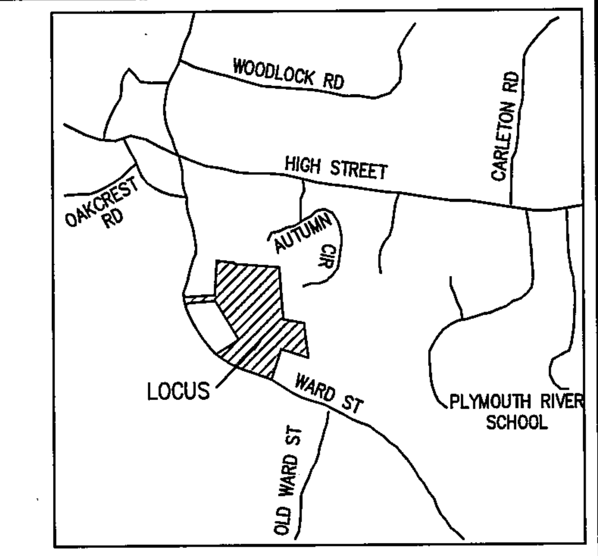

Locus Map
Not to Scale

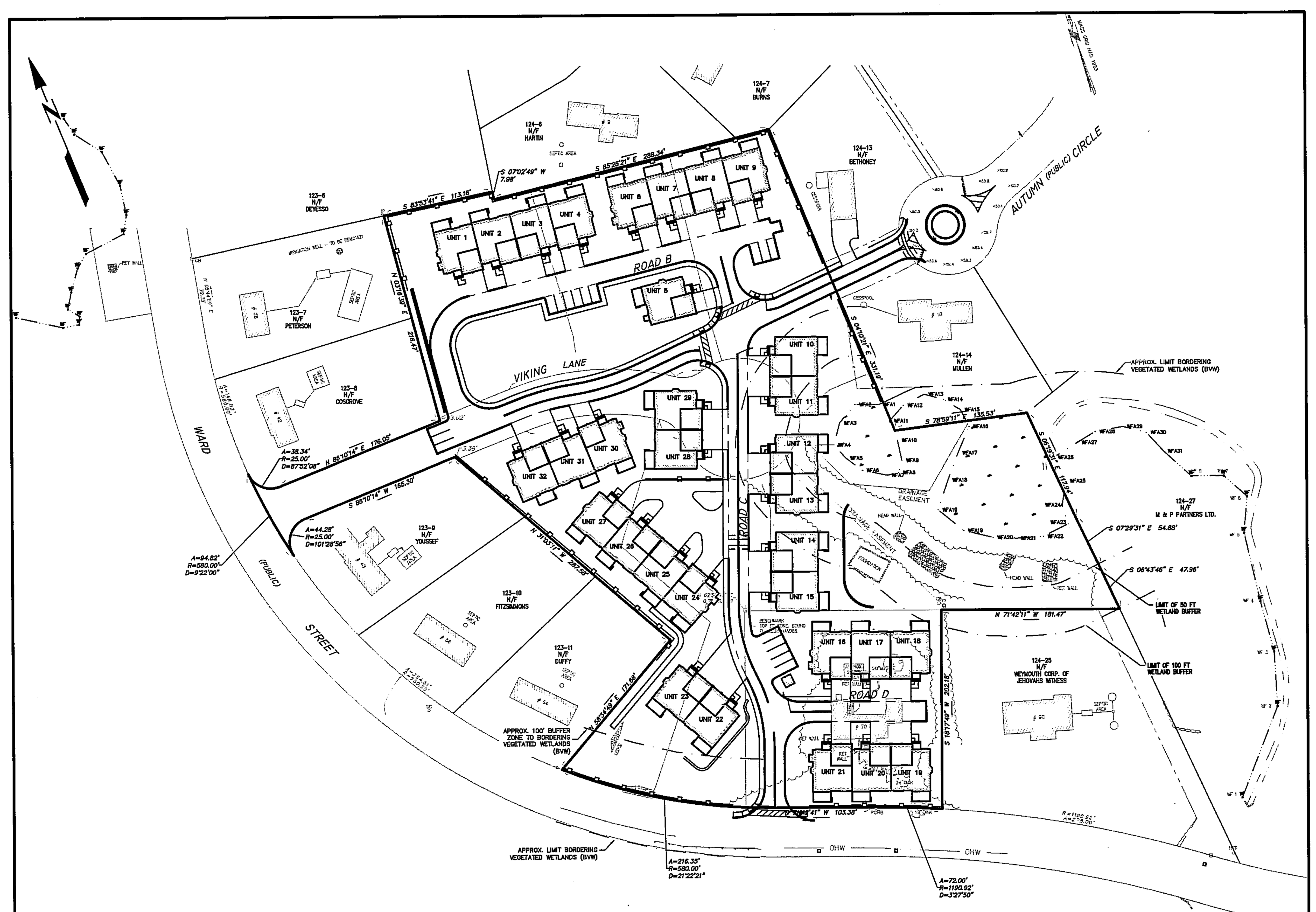

SCALE: 1" = 80'

Drawing Index:

No.	Drawing Title
CS-1	COVER SHEET
G-1	GENERAL NOTES
EX-1	EXISTING CONDITIONS PLAN
C-1	SITE LAYOUT PLAN
C-2	GRADING & UTILITY PLAN
C-2A	HYDRANT LOCATION PLAN
C-3	ROADWAY PROFILES
C-3A-3B	SIGHT TRIANGLES PLAN
C-4-10	CONSTRUCTION DETAILS
C-11	EROSION CONTROL DETAILS
LS-1	PRELIMINARY LANDSCAPE PLAN
TT-1-2	TRUCK TURNING PLANS

Applicant:

River Stone, LLC
293R Washington Street
Norwell, Massachusetts 02061

Engineer/Surveyor:

McKenzie Engineering Group, Inc.
150 Longwater Drive
Suite 101
Norwell, MA 02061

Issued Date: October 7, 2015
Revised:
1/8/2018
1/19/2018
2/2/2018
3/9/2018
4/25/2018

• McKenzie Engineering Group, Inc. Consulting Engineers •
150 Longwater Drive, Suite 101, Norwell, Massachusetts 02061

REV	DATE	DESCRIPTION	BY	APP
1	1/8/18	RECONFIGURATION	SBS	BCM
2	1/19/18	REVIEW COMMENTS	SBS	BCM
3	2/2/18	REVIEW COMMENTS	SBS	BCM
4	3/9/18	REVIEW COMMENTS	SBS	BCM
5	4/25/18	REVIEW COMMENTS	SBS	BCM

MCKENZIE ENGINEERING GROUP
Assinippi Office Park
150 Longwater Drive, Suite 101
Norwell, MA 02061
Ph: 781-792-3900
www.mckeng.com

COMPREHENSIVE PERMIT PLAN
KNOWN AS
RIVER STONE
(ASSESSORS MAP 124, LOTS 70-75 & LOT 26)
VIKING LANE & WARD STREET
HINGHAM, MASSACHUSETTS

PROFESSIONAL ENGINEER:
COMMONWEALTH OF MASSACHUSETTS
BRADLEY C. McKENZIE
CIVIL
No. 36917
REGISTERED PROFESSIONAL ENGINEER

ZBA PERMIT PLAN

APPLICANT:
RIVER STONE, LLC
293R WASHINGTON STREET
NORWELL, MASSACHUSETTS 02061

DRAWN BY:	JLS
DESIGNED BY:	- -
CHECKED BY:	- -
APPROVED BY:	- -
DATE:	10/7/2015
SCALE:	AS NOTED
PROJECT NO.:	27-135

DWG. TITLE:
Cover Sheet

DWG. NO:
CS-1

© MCKENZIE ENGINEERING GROUP, INC.

M:\MEG\2007 PROJECTS\27-135\DWGS\CUT SHEETS\SUBMISSION R6\27-135 C-1 (R6).DWG

Abbreviations

ABAN	ABANDONED
ACP	ASBESTOS CEMENT PIPE
ACR	ACCESSIBLE CURB RAMP
ADJ	ADJUST
APPROX	APPROXIMATE
ASPH	ASPHALT
ACCMP	ASPHALT COATED CORRUGATED METAL PIPE
B	BOLLARD
BD	BOUND
BLDG	BUILDING
BIT CONC	BITUMINOUS CONCRETE
BM	BENCHMARK
BS	BOTTOM OF SLOPE
CAP	CORRUGATED ALUMINUM PIPE
CB	CATCH BASIN
C&C	CUT AND CAPPED
CB/DH	CONC. BOUND/DRILL HOLE
CB/EPLP	CB/ESCUTCHEON
SGC	CAPE COD BERM
CIP	CAST IRON PIPE
CIT	CHANGE IN TYPE
C	CENTERLINE
CLF	CHAIN LINK FENCE
CO	CLEAN OUT
CONC	CONCRETE
COND	CONDUIT
CMP	CORRUGATED METAL PIPE
CPP	CORRUGATED POLYETHYLENE PIPE
CS	COMBINED SEWER
CSMH	COMBINED SEWER MANHOLE
CULV	CULVERT
Δ	DELTA ANGLE
D	DRAIN
DCB	DOUBLE CATCH BASIN
DIP	DUCTILE IRON PIPE
DMH	DRAIN MANHOLE
E	ELECTRIC
ECC	EXTRUDED CONCRETE CURB
ELEV	ELEVATION
EMH	ELECTRIC MANHOLE
E/T/C	ELECTRIC, TELEPHONE, & CABLE TV
EW	END WALL
EXIST	EXISTING
FAB	FIRE ALARM BOX
FES	FLARED END SECTION
FND.	FOUND
FND	FOUNDATION
F&C	FRAME AND COVER
F&G	FRAME AND GRATE
G	GAS
GD	GROUND
GG	GAS GATE
GIP	GALVANIZED IRON PIPE
GP	GUARD POST
GS	GAS SERVICE
GR	GUARD RAIL
GRAN.	GRANITE
HH	HANDHOLE
HOR	HORIZONTAL
HP	HIGH PRESSURE
HWL	HEADWALL
HYD	HYDRANT
INV	INVERT
I.P.	IRON PIN
I.R.	IRON ROD
L	LEAD
LP	LIGHT POLE
MAX	MAXIMUM
MC	METAL COVER
MH	MANHOLE
MHB	MASS. HIGHWAY BOUND
MIN	MINIMUM
MLP	METAL LIGHT POLE
NIC	NOT IN CONTRACT
NTS	NOT TO SCALE
OHW	OVERHEAD WIRE
PB	PULL BOX
PE	POLYETHYLENE PIPE
P	PROPERTY LINE
PROP	PROPOSED
PVC	POLYVINYL CHLORIDE PIPE
PVMT	PAVEMENT
PWW	PAVED WATER WAY
RCP	REINFORCED CONCRETE PIPE
REM	REMOVE
REMOD	REMODEL
RET	RETAIN
ROW	RIGHT OF WAY
RR	RAILROAD
R&R	REMOVE AND RESET
R&S	REMOVE AND STACK
S	SEWER
SB	STONE BOUND
SB/DH	STONE BOUND/DRILL HOLE
SGC	SLOPED GRANITE CURB
SMH	SEWER MANHOLE
STA	STATION
SS	SEWER SERVICE
STL	STEEL
SW	SIDEWALK
T	TELEPHONE
TCB	TRAFFIC CONTROL BOX
TL	TRAFFIC LIGHT
TMH	TELEPHONE MANHOLE
Tr	TREE
TRANS	TRANSFORMER
TS	TOP OF SLOPE
TSV	TAPPING SLEEVE, VALVE AND BOX
TYP	TYPICAL
UP	UTILITY POLE
VCP	VITRIFIED CLAY PIPE
VERT	VERTICAL
VGC	VERTICAL GRANITE CURB
W	WATER MAIN
WG	WATER GATE

Legend

EXISTING	PROPOSED	
55	100	CONTOUR ELEVATION
X 100.2	+ 100.00	SPOT GRADE
27.21 TC, 27.15 BC	27.21TC, 27.15BC	TOP & BOTTOM ELEVATION
21.25	21.25	SPOT ELEVATION w/LEADER
S	S	SEWER MANHOLE (SMH)
D	D	DRAIN MANHOLE (DMH)
		CATCH BASIN (CB)
		DOUBLE CATCH BASIN (DCB)
		HYDRANT (HYD)
		UTILITY POLE (UP)
		LIGHT
		WATER GATE (WG)
		GAS GATE (GG)
		SIGN
EP	EP	EDGE OF PAVEMENT (NO CURB)
TP	TP	TEST PIT AND/OR PERC TEST LOCATION
		EXISTING TREE
		BOLLARD
D	D	DUMPSTER PAD
	10	PARKING COUNT
		HANDICAP RAMP
		HANDICAP PARKING
	VAN	VAN-ACCESSIBLE HANDICAP PARKING
		UTILITY POLE
		GUY POLE
HH	HH	HAND HOLE
PB	PB	PULL BOX
T	T	TELEPHONE MANHOLE
T	T	TRANSFORMER PAD
		TREE LINE
—x—x—x—	—x—x—x—	CHAIN LINK FENCE
		STONE WALL
		RETAINING WALL
A1		WETLAND FLAG LOCATION
A1 A2		WETLAND LINE

General Notes

1. LOCUS OWNER: ASSESSOR'S MAP 124,LOTS 70-75 & LOT 26 (6.67 ACRES)

   LOT 124-26
   N/F PAULA J. LANGLOIS
   BK 36484, PG 93

   LOT 124-70
   VIKING LANE, LLC
   BK 42466, PG 22

   LOTS 124-(71-75)
   XERXES REALTY TRUST
   BK 11092, PG 50

2. THE PROPERTY LINES, EXISTING SINGLE FAMILY HOMES AND SITE TOPOGRAPHIC INFORMATION SHOWN ON THIS PLAN ARE BASED ON THOSE SHOWN ON THE PLAN ENTITLED "DEFINITIVE SUBDIVISION VIKING LAND AT WARD STREET IN HINGHAM, MA" DATED MARCH 20, 1995 BY RH COLE ASSOCIATES AND DAYLOR CONSULTING GROUP, INC. RECORDED IN PLAN BOOK 45, PAGE 803.
3. EXISTING CONDITIONS INFORMATION RELATING TO THE EXISTING VIKING LANE ROADWAY AND ASSOCIATED STORMWATER FACILITIES WERE FIELD LOCATED BY MCKENZIE ENGINEERING GROUP, INC. IN JUNE OF 2015.
4. THE PROPERTY SHOWN HEREON IS LOCATED IN THE ZONING DISTRICT RESIDENCE B.
5. WETLAND FLAGS NUMBERED A1 – A31 WERE FLAGGED IN THE FIELD BY ENVIRONMENTAL CONSULTING & RESTORATION, LLC AND FIELD LOCATED BY MCKENZIE ENGINEERING GROUP, INC. IN JUNE OF 2015.
6. ELEVATIONS SHOWN ARE REFERENCED TO THE NORTH AMERICAN VERTICAL DATUM (NAVD) OF 1988.
7. THE PROPERTY SHOWN HEREON IS LOCATED IN ZONE X OF THE FLOOD INSURANCE RATE MAP COMMUNITY PANEL No. 25023C0083J, WHICH BEARS AN EFFECTIVE DATE OF JULY 17, 2012.
8. THE PROPERTY SHOWN HEREON IS NOT LOCATED IN A DEP ZONE 2 AND TOWN OF HINGHAM AQUIFER PROTECTION DISTRICT ZONE.
9. THE PROPERTY SHOWN HEREON IS NOT LOCATED IN THE NATURAL HERITAGE & ENDANGERED SPECIES AS SHOWN ON THE NHESP ATLAS DATED 2014.
10. UTILITY INFORMATION FROM ABOVE GROUND OBSERVED EVIDENCE IN CONJUNCTION WITH DIG SAFE MARKINGS AND RECORD PLANS. THE LAND SURVEYOR MAKES NO GUARANTEES THAT THE UNDERGROUND UTILITIES SHOWN HEREON COMPRISE ALL SUCH UTILITIES IN THE AREA, EITHER IN SERVICE OR ABANDONED. THE LAND SURVEYOR FURTHER DOES NOT WARRANT THAT THE UNDERGROUND UTILITIES SHOWN ARE IN THE EXACT LOCATION INDICATED ALTHOUGH HE DOES CERTIFY THAT THEY ARE LOCATED AS ACCURATELY AS POSSIBLE FROM AVAILABLE INFORMATION AND CONSTRUCTION AS THE LAND SURVEYOR HAS NOT PHYSICALLY LOCATED THE UNDERGROUND UTILITIES. BEFORE CONSTRUCTION CALL DIG SAFE SYSTEMS, INC. AT 1-888-344-7233.
11. ANY CHANGE IN THE FIELD CONDITIONS SHOULD BE REPORTED TO THE ENGINEER TO INSURE THAT ANY MODIFICATIONS TO THE ORIGINAL DESIGN ARE PROPER AND ADEQUATE TO SERVE THE PROJECT'S NEEDS, AND COMPLY WITH THE APPLICABLE STANDARDS AND REGULATIONS.
12. THE IRRIGATION WELL SHOWN ON LOT 7 OF ASSESSOR'S MAP 123 IS BELIEVED TO HAVE BEEN REMOVED BASED ON RECORD INFORMATION FROM THE HINGHAM BOARD OF HEALTH, SEE PLAN TITLED 'SEPTIC SYSTEM AS-BUILT PLAN' BY VERTEX ENGINEERING SERVICES, INC. DATED FEBRUARY 2, 1999.

Utility Notes

1. THE CONTRACTOR IS SPECIFICALLY CAUTIONED THAT THE LOCATION AND/OR ELEVATION OF EXISTING UTILITIES AND STRUCTURES AS SHOWN ON THESE PLANS IS BASED ON RECORDS OF VARIOUS UTILITY COMPANIES AND WHERE POSSIBLE, MEASUREMENTS TAKEN IN THE FIELD. THIS INFORMATION IS NOT TO BE RELIED UPON AS BEING EXACT OR COMPLETE. THE LOCATION OF ALL UNDERGROUND UTILITIES AND STRUCTURES SHALL BE VERIFIED IN THE FIELD BY THE CONTRACTOR PRIOR TO THE START OF CONSTRUCTION. THE CONTRACTOR MUST CONTACT THE APPROPRIATE UTILITY COMPANY, ANY GOVERNING PERMITTING AUTHORITY, AND "DIGSAFE" AT LEAST 72 HOURS PRIOR TO ANY EXCAVATION WORK TO REQUEST EXACT FIELD LOCATION OF UTILITIES AND THE ENGINEER SHALL BE NOTIFIED IN WRITING OF ANY UTILITIES INTERFERING WITH THE PROPOSED CONSTRUCTION AND APPROPRIATE REMEDIAL ACTION TAKEN BEFORE PROCEEDING WITH THE WORK. IT SHALL BE THE RESPONSIBILITY OF THE CONTRACTOR TO RELOCATE ALL EXISTING UTILITIES WHICH CONFLICT WITH THE PROPOSED IMPROVEMENTS SHOWN ON THE PLAN.
2. THE CONTRACTOR SHALL BE RESPONSIBLE FOR ESTABLISHING AND MAINTAINING ALL CONTROL POINTS AND BENCHMARKS NECESSARY FOR THE WORK.
3. ALL WATER SERVICES SHALL BE INSTALLED WITH 5' OF COVER EXCEPT AS NOTED OR DETAILED OTHERWISE.
4. ALL WATER MAIN INSTALLATION SHALL BE IN ACCORDANCE WITH THE AQUARION WATER COMPANY'S REQUIREMENTS. ALL DOMESTIC WATER SERVICE CONNECTIONS SHALL CONSIST OF P.E. TUBING, STAINLESS STEEL INSERTS, AN APPROPRIATELY SIZED CORPORATION STOP, APPROVED SADDLE, CURB STOP, GATE AND BOX AND METALLIC INDICATOR TAPE.
5. THE CONTRACTOR SHALL PROVIDE INLET PROTECTION, SUCH AS SILT SACKS, AT ALL CATCH BASINS TO PREVENT SEDIMENT FROM ENTERING THE EXTENDED DETENTION WETLAND AREA. INLET PROTECTION WILL ALLOW THE STORM DRAIN INLETS TO BE USED BEFORE FINAL STABILIZATION.

DIG SAFE
MA-RI-ME-NH-VT
CALL
TOLL FREE
1-888-344-7233
UTILITIES UNDERGROUND PLANT DAMAGE PREVENTION SYSTEM

REV	DATE	DESCRIPTION	BY	APP
1	1/8/18	RECONFIGURATION	SBS	BCM
2	1/19/18	NO CHANGES	SBS	BCM
3	2/2/18	REVIEW COMMENTS	SBS	BCM
4	3/9/18	NO CHANGES	SBS	BCM
5	4/25/18	NO CHANGES	SBS	BCM

MCKENZIE ENGINEERING GROUP
Assinippi Office Park
150 Longwater Drive, Suite 101
Norwell, MA 02061
Ph: 781-792-3900
www.mckeng.com

COMPREHENSIVE PERMIT PLAN
KNOWN AS
RIVER STONE
(ASSESSORS MAP 124, LOTS 70-75 & LOT 26)
VIKING LANE & WARD STREET
HINGHAM, MASSACHUSETTS

PROFESSIONAL ENGINEER:
COMMONWEALTH OF MASSACHUSETTS
BRADLEY C. McKENZIE
CIVIL
No. 36917
REGISTERED PROFESSIONAL ENGINEER

ZBA PERMIT PLAN

APPLICANT:
RIVER STONE, LLC
293R WASHINGTON STREET
NORWELL, MASSACHUSETTS 02061

DRAWN BY:	JLS
DESIGNED BY:	- -
CHECKED BY:	- -
APPROVED BY:	- -
DATE:	10/7/2015
SCALE:	NOT TO SCALE
PROJECT NO.:	27-135

DWG. TITLE:
General Notes

DWG. NO: G-1

© MCKENZIE ENGINEERING GROUP, INC.

M:\MEG\2007 PROJECTS\27-135\DWGS\CUT SHEETS\SUBMISSION R6\27-135 C-1 (R6).DWG

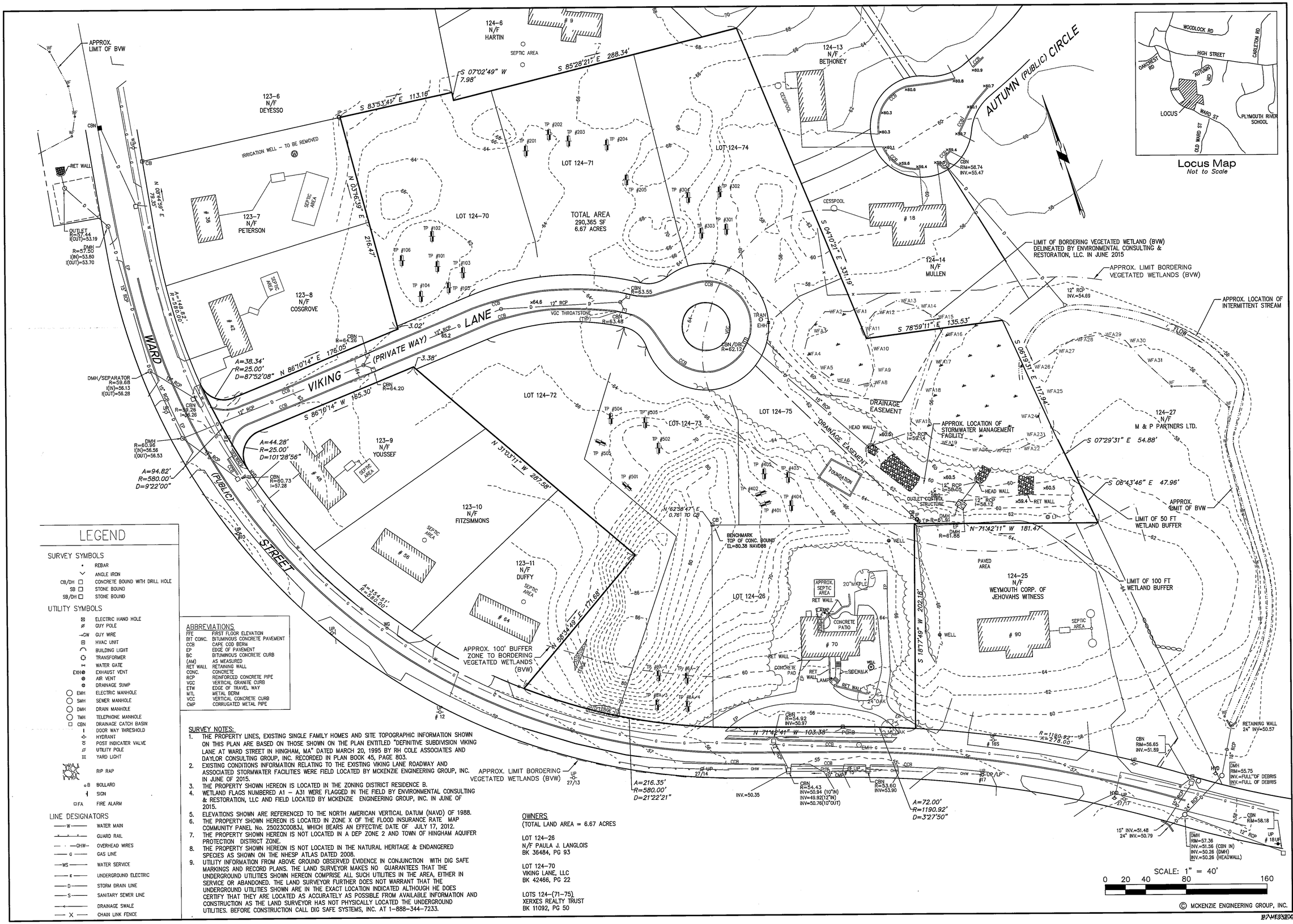

LEGEND

SURVEY SYMBOLS

- REBAR
- ANGLE IRON
- CB/DH — CONCRETE BOUND WITH DRILL HOLE
- SB — STONE BOUND
- SB/DH — STONE BOUND

UTILITY SYMBOLS

- ELECTRIC HAND HOLE
- GUY POLE
- GW — GUY WIRE
- HVAC UNIT
- BUILDING LIGHT
- TRANSFORMER
- WATER GATE
- EXH — EXHAUST VENT
- AIR VENT
- DRAINAGE SUMP
- EMH — ELECTRIC MANHOLE
- SMH — SEWER MANHOLE
- DMH — DRAIN MANHOLE
- TMH — TELEPHONE MANHOLE
- CBN — DRAINAGE CATCH BASIN
- DOOR WAY THRESHOLD
- HYDRANT
- POST INDICATER VALVE
- UTILITY POLE
- YARD LIGHT
- RIP RAP
- B — BOLLARD
- SIGN
- FA — FIRE ALARM

LINE DESIGNATORS

- W — WATER MAIN
- GUARD RAIL
- OHW — OVERHEAD WIRES
- G — GAS LINE
- WS — WATER SERVICE
- E — UNDERGROUND ELECTRIC
- D — STORM DRAIN LINE
- S — SANITARY SEWER LINE
- DRAINAGE SWALE
- X — CHAIN LINK FENCE

ABBREVIATIONS

FFE	FIRST FLOOR ELEVATION
BIT CONC.	BITUMINOUS CONCRETE PAVEMENT
CCB	CAPE COD BERM
EP	EDGE OF PAVEMENT
BC	BITUMINOUS CONCRETE CURB
(AM)	AS MEASURED
RET WALL	RETAINING WALL
CONC.	CONCRETE
RCP	REINFORCED CONCRETE PIPE
VGC	VERTICAL GRANITE CURB
ETW	EDGE OF TRAVEL WAY
MTL	METAL BERM
VCC	VERTICAL CONCRETE CURB
CMP	CORRUGATED METAL PIPE

SURVEY NOTES:

1. THE PROPERTY LINES, EXISTING SINGLE FAMILY HOMES AND SITE TOPOGRAPHIC INFORMATION SHOWN ON THIS PLAN ARE BASED ON THOSE SHOWN ON THE PLAN ENTITLED "DEFINITIVE SUBDIVISION VIKING LANE AT WARD STREET IN HINGHAM, MA" DATED MARCH 20, 1995 BY RH COLE ASSOCIATES AND DAYLOR CONSULTING GROUP, INC. RECORDED IN PLAN BOOK 45, PAGE 803.
2. EXISTING CONDITIONS INFORMATION RELATING TO THE EXISTING VIKING LANE ROADWAY AND ASSOCIATED STORMWATER FACILITIES WERE FIELD LOCATED BY MCKENZIE ENGINEERING GROUP, INC. IN JUNE OF 2015.
3. THE PROPERTY SHOWN HEREON IS LOCATED IN THE ZONING DISTRICT RESIDENCE B.
4. WETLAND FLAGS NUMBERED A1 – A31 WERE FLAGGED IN THE FIELD BY ENVIRONMENTAL CONSULTING & RESTORATION, LLC AND FIELD LOCATED BY MCKENZIE ENGINEERING GROUP, INC. IN JUNE OF 2015.
5. ELEVATIONS SHOWN ARE REFERENCED TO THE NORTH AMERICAN VERTICAL DATUM (NAVD) OF 1988.
6. THE PROPERTY SHOWN HEREON IS LOCATED IN ZONE X OF THE FLOOD INSURANCE RATE MAP COMMUNITY PANEL No. 25023C0083J, WHICH BEARS AN EFFECTIVE DATE OF JULY 17, 2012.
7. THE PROPERTY SHOWN HEREON IS NOT LOCATED IN A DEP ZONE 2 AND TOWN OF HINGHAM AQUIFER PROTECTION DISTRICT ZONE.
8. THE PROPERTY SHOWN HEREON IS NOT LOCATED IN THE NATURAL HERITAGE & ENDANGERED SPECIES AS SHOWN ON THE NHESP ATLAS DATED 2008.
9. UTILITY INFORMATION FROM ABOVE GROUND OBSERVED EVIDENCE IN CONJUNCTION WITH DIG SAFE MARKINGS AND RECORD PLANS. THE LAND SURVEYOR MAKES NO GUARANTEES THAT THE UNDERGROUND UTILITIES SHOWN HEREON COMPRISE ALL SUCH UTILITIES IN THE AREA, EITHER IN SERVICE OR ABANDONED. THE LAND SURVEYOR FURTHER DOES NOT WARRANT THAT THE UNDERGROUND UTILITIES SHOWN ARE IN THE EXACT LOCATION INDICATED ALTHOUGH HE DOES CERTIFY THAT THEY ARE LOCATED AS ACCURATELY AS POSSIBLE FROM AVAILABLE INFORMATION AND CONSTRUCTION AS THE LAND SURVEYOR HAS NOT PHYSICALLY LOCATED THE UNDERGROUND UTILITIES. BEFORE CONSTRUCTION CALL DIG SAFE SYSTEMS, INC. AT 1-888-344-7233.

OWNERS

(TOTAL LAND AREA = 6.67 ACRES

LOT 124-26
N/F PAULA J. LANGLOIS
BK 36484, PG 93

LOT 124-70
VIKING LANE, LLC
BK 42466, PG 22

LOTS 124-(71-75)
XERXES REALTY TRUST
BK 11092, PG 50

REV	DATE	DESCRIPTION	BY	APP
1	1/8/18	NO CHANGES	SBS	RJH
2	1/19/18	NO CHANGES	SBS	RJH
3	2/2/18	NO CHANGES	SBS	RJH
4	3/9/18	ADDITIONAL TOPO	RLS	RJH
5	4/25/18	UPDATED WATER	SBS	RJH

MCKENZIE ENGINEERING GROUP
Assinippi Office Park
150 Longwater Drive, Suite 101
Norwell, MA 02061
Ph: 781-792-3900
www.mckeng.com

COMPREHENSIVE PERMIT PLAN

KNOWN AS

RIVER STONE

(ASSESSORS MAP 124, LOTS 70-75 & LOT 26)
VIKING LANE & WARD STREET
HINGHAM, MASSACHUSETTS

PROFESSIONAL SURVEYOR:
COMMONWEALTH OF MASSACHUSETTS
RICHARD J. HOOD No. 35031
PROFESSIONAL LAND SURVEYOR

ZBA PERMIT PLAN

APPLICANT:
RIVER STONE, LLC
293R WASHINGTON STREET
NORWELL, MASSACHUSETTS 02061

DRAWN BY:	JLS
DESIGNED BY:	- -
CHECKED BY:	- -
APPROVED BY:	- -
DATE:	10/7/2015
SCALE:	
PROJECT NO.:	27-135

DWG. TITLE: Existing Conditions Plan

DWG. NO: EX-1

© MCKENZIE ENGINEERING GROUP, INC.

M:\CAD\PROJECTS\27-135\DWGS\27-135EX.DWG

*NOTE:
ALL SIGNS AND PAVEMENT MARKINGS TO BE INSTALLED WITHIN THE PROJECT SITE SHALL CONFORM TO THE APPLICABLE SPECIFICATIONS OF THE MANUAL ON UNIFORM TRAFFIC CONTROL DEVICES (MUTCD).

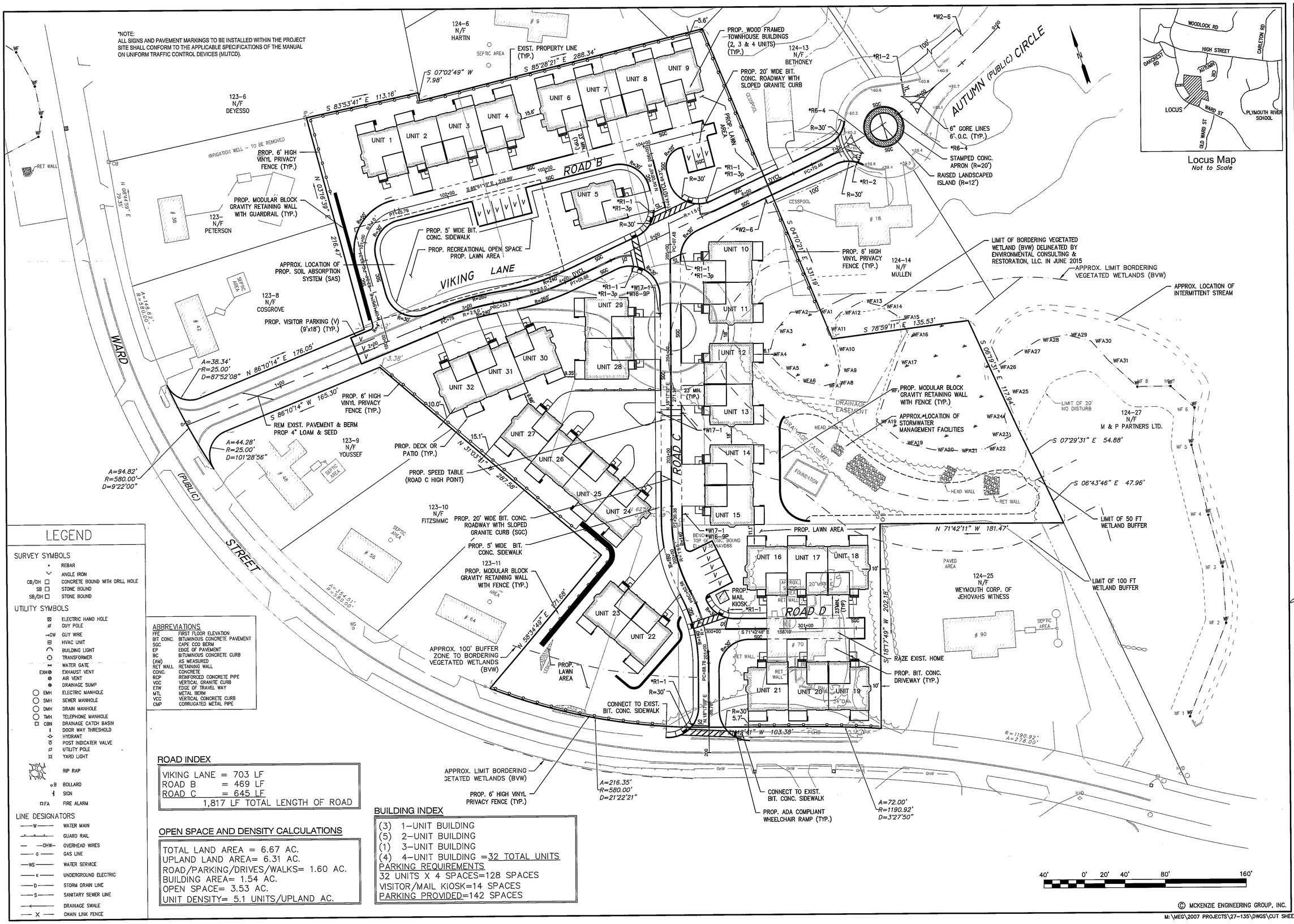

Locus Map
Not to Scale

LEGEND

SURVEY SYMBOLS
- REBAR
- ANGLE IRON
- CB/DH — CONCRETE BOUND WITH DRILL HOLE
- SB — STONE BOUND
- SB/DH — STONE BOUND

UTILITY SYMBOLS
- ELECTRIC HAND HOLE
- GUY POLE
- GW — GUY WIRE
- HVAC UNIT
- BUILDING LIGHT
- TRANSFORMER
- WATER GATE
- EXH — EXHAUST VENT
- AIR VENT
- DRAINAGE SUMP
- EMH — ELECTRIC MANHOLE
- SMH — SEWER MANHOLE
- DMH — DRAIN MANHOLE
- TMH — TELEPHONE MANHOLE
- CBN — DRAINAGE CATCH BASIN
- DOOR WAY THRESHOLD
- HYDRANT
- POST INDICATER VALVE
- UTILITY POLE
- YARD LIGHT
- RIP RAP
- B — BOLLARD
- SIGN
- FA — FIRE ALARM

LINE DESIGNATORS
- W — WATER MAIN
- GUARD RAIL
- OHW — OVERHEAD WIRES
- G — GAS LINE
- WS — WATER SERVICE
- E — UNDERGROUND ELECTRIC
- D — STORM DRAIN LINE
- S — SANITARY SEWER LINE
- DRAINAGE SWALE
- X — CHAIN LINK FENCE

ABBREVIATIONS

FFE	FIRST FLOOR ELEVATION
BIT CONC.	BITUMINOUS CONCRETE PAVEMENT
SGC	CAPE COD BERM
EP	EDGE OF PAVEMENT
BC	BITUMINOUS CONCRETE CURB
(AM)	AS MEASURED
RET WALL	RETAINING WALL
CONC.	CONCRETE
RCP	REINFORCED CONCRETE PIPE
VCC	VERTICAL GRANITE CURB
ETW	EDGE OF TRAVEL WAY
MTL	METAL BERM
VCC	VERTICAL CONCRETE CURB
CMP	CORRUGATED METAL PIPE

ROAD INDEX

VIKING LANE = 703 LF
ROAD B = 469 LF
ROAD C = 645 LF
1,817 LF TOTAL LENGTH OF ROAD

OPEN SPACE AND DENSITY CALCULATIONS

TOTAL LAND AREA = 6.67 AC.
UPLAND LAND AREA= 6.31 AC.
ROAD/PARKING/DRIVES/WALKS= 1.60 AC.
BUILDING AREA= 1.54 AC.
OPEN SPACE= 3.53 AC.
UNIT DENSITY= 5.1 UNITS/UPLAND AC.

BUILDING INDEX

(3) 1-UNIT BUILDING
(5) 2-UNIT BUILDING
(1) 3-UNIT BUILDING
(4) 4-UNIT BUILDING =32 TOTAL UNITS

PARKING REQUIREMENTS
32 UNITS X 4 SPACES=128 SPACES
VISITOR/MAIL KIOSK=14 SPACES
PARKING PROVIDED=142 SPACES

© MCKENZIE ENGINEERING GROUP, INC.

M:\MEG\2007 PROJECTS\27-135\DWGS\CUT SHEETS\SUBMISSION R6\27-135 C-1 (R6).DWG

REV	DATE	DESCRIPTION	BY	APP
1	1/8/18	RECONFIGURATION	SBS	BCM
2	1/19/18	REVIEW COMMENTS	SBS	BCM
3	2/2/18	REVIEW COMMENTS	SBS	BCM
4	3/9/18	REVIEW COMMENTS	SBS	BCM
5	4/25/18	REVIEW COMMENTS	SBS	BCM

MCKENZIE ENGINEERING GROUP
Assinippi Office Park
150 Longwater Drive, Suite 101
Norwell, MA 02061
Ph: 781-792-3900
www.mckeng.com

COMPREHENSIVE PERMIT PLAN

KNOWN AS
RIVER STONE
(ASSESSORS MAP 124, LOTS 70-75 & LOT 26)
VIKING LANE & WARD STREET
HINGHAM, MASSACHUSETTS

PROFESSIONAL ENGINEER:
COMMONWEALTH OF MASSACHUSETTS
BRADLEY C. McKENZIE
CIVIL
No. 36917
REGISTERED PROFESSIONAL ENGINEER

ZBA PERMIT PLAN

APPLICANT:
RIVER STONE, LLC
293R WASHINGTON STREET
NORWELL, MASSACHUSETTS 02061

DRAWN BY:	JLS
DESIGNED BY:	- -
CHECKED BY:	- -
APPROVED BY:	- -
DATE:	10/7/2015
SCALE:	1"=40'
PROJECT NO.:	27-135

DWG. TITLE:
Proposed Site Layout Plan

DWG. NO: C-1

LEGEND

SURVEY SYMBOLS

- REBAR
- ANGLE IRON
- CB/DH — CONCRETE BOUND WITH DRILL HOLE
- SB — STONE BOUND
- SB/DH — STONE BOUND

UTILITY SYMBOLS

- ELECTRIC HAND HOLE
- GUY POLE
- GW — GUY WIRE
- HVAC UNIT
- BUILDING LIGHT
- TRANSFORMER
- WATER GATE
- EXH — EXHAUST VENT
- AIR VENT
- DRAINAGE SUMP
- EMH — ELECTRIC MANHOLE
- SMH — SEWER MANHOLE
- DMH — DRAIN MANHOLE
- TMH — TELEPHONE MANHOLE
- CBN — DRAINAGE CATCH BASIN
- DOOR WAY THRESHOLD
- HYDRANT
- POST INDICATER VALVE
- UTILITY POLE
- YARD LIGHT
- RIP RAP
- B — BOLLARD
- SIGN
- FA — FIRE ALARM

LINE DESIGNATORS

- W — WATER MAIN
- GUARD RAIL
- OHW — OVERHEAD WIRES
- G — GAS LINE
- WS — WATER SERVICE
- E — UNDERGROUND ELECTRIC
- D — STORM DRAIN LINE
- S — SANITARY SEWER LINE
- DRAINAGE SWALE
- X — CHAIN LINK FENCE

ABBREVIATIONS

FFE	FIRST FLOOR ELEVATION
BIT CONC.	BITUMINOUS CONCRETE PAVEMENT
CCB	CAPE COD BERM
EP	EDGE OF PAVEMENT
BC	BITUMINOUS CONCRETE CURB
(AM)	AS MEASURED
RET WALL	RETAINING WALL
CONC.	CONCRETE
RCP	REINFORCED CONCRETE PIPE
VGC	VERTICAL GRANITE CURB
ETW	EDGE OF TRAVEL WAY
MTL	METAL BERM
VCC	VERTICAL CONCRETE CURB
CMP	CORRUGATED METAL PIPE

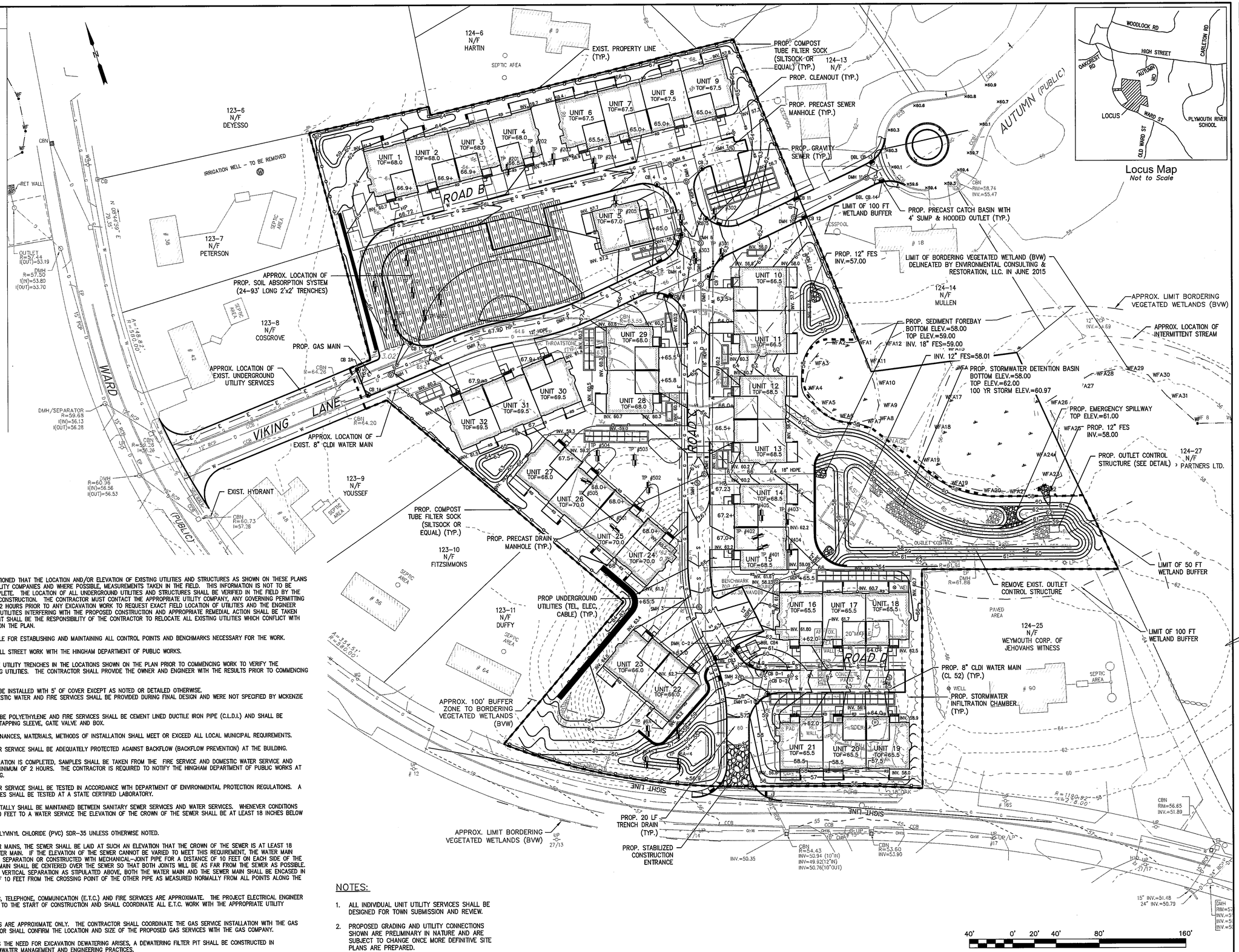

Locus Map
Not to Scale

GENERAL UTILITY NOTES:

1. THE CONTRACTOR IS SPECIFICALLY CAUTIONED THAT THE LOCATION AND/OR ELEVATION OF EXISTING UTILITIES AND STRUCTURES AS SHOWN ON THESE PLANS IS BASED ON RECORDS OF VARIOUS UTILITY COMPANIES AND WHERE POSSIBLE, MEASUREMENTS TAKEN IN THE FIELD. THIS INFORMATION IS NOT TO BE RELIED UPON AS BEING EXACT OR COMPLETE. THE LOCATION OF ALL UNDERGROUND UTILITIES AND STRUCTURES SHALL BE VERIFIED IN THE FIELD BY THE CONTRACTOR PRIOR TO THE START OF CONSTRUCTION. THE CONTRACTOR MUST CONTACT THE APPROPRIATE UTILITY COMPANY, ANY GOVERNING PERMITTING AUTHORITY, AND "DIGSAFE" AT LEAST 72 HOURS PRIOR TO ANY EXCAVATION WORK TO REQUEST EXACT FIELD LOCATION OF UTILITIES AND THE ENGINEER SHALL BE NOTIFIED IN WRITING OF ANY UTILITIES INTERFERING WITH THE PROPOSED CONSTRUCTION AND APPROPRIATE REMEDIAL ACTION SHALL BE TAKEN BEFORE PROCEEDING WITH THE WORK. IT SHALL BE THE RESPONSIBILITY OF THE CONTRACTOR TO RELOCATE ALL EXISTING UTILITIES WHICH CONFLICT WITH THE PROPOSED IMPROVEMENTS SHOWN ON THE PLAN.
2. THE CONTRACTOR SHALL BE RESPONSIBLE FOR ESTABLISHING AND MAINTAINING ALL CONTROL POINTS AND BENCHMARKS NECESSARY FOR THE WORK.
3. THE CONTRACTOR SHALL COORDINATE ALL STREET WORK WITH THE HINGHAM DEPARTMENT OF PUBLIC WORKS.
4. THE CONTRACTOR SHALL EXCAVATE THE UTILITY TRENCHES IN THE LOCATIONS SHOWN ON THE PLAN PRIOR TO COMMENCING WORK TO VERIFY THE ELEVATIONS AND LOCATIONS OF EXISTING UTILITIES. THE CONTRACTOR SHALL PROVIDE THE OWNER AND ENGINEER WITH THE RESULTS PRIOR TO COMMENCING ANY WORK.
5. ALL WATER AND FIRE SERVICES SHALL BE INSTALLED WITH 5' OF COVER EXCEPT AS NOTED OR DETAILED OTHERWISE.
6. THE LOCATION AND SIZES OF THE DOMESTIC WATER AND FIRE SERVICES SHALL BE PROVIDED DURING FINAL DESIGN AND WERE NOT SPECIFIED BY MCKENZIE ENGINEERING GROUP, INC.
7. THE DOMESTIC WATER SERVICES SHALL BE POLYETHYLENE AND FIRE SERVICES SHALL BE CEMENT LINED DUCTILE IRON PIPE (C.L.D.I.) AND SHALL BE INSTALLED WITH APPROPRIATELY SIZED TAPPING SLEEVE, GATE VALVE AND BOX.
8. ALL WATER AND FIRE SERVICE APPURTENANCES, MATERIALS, METHODS OF INSTALLATION SHALL MEET OR EXCEED ALL LOCAL MUNICIPAL REQUIREMENTS.
9. THE FIRE SERVICE AND DOMESTIC WATER SERVICE SHALL BE ADEQUATELY PROTECTED AGAINST BACKFLOW (BACKFLOW PREVENTION) AT THE BUILDING.
10. AFTER PRESSURE TESTING AND CHLORINATION IS COMPLETED, SAMPLES SHALL BE TAKEN FROM THE FIRE SERVICE AND DOMESTIC WATER SERVICE AND SHALL BE TESTED AT 200 PSI FOR A MINIMUM OF 2 HOURS. THE CONTRACTOR IS REQUIRED TO NOTIFY THE HINGHAM DEPARTMENT OF PUBLIC WORKS AT LEAST 24 HOURS PRIOR TO THE TESTING.
11. THE FIRE SERVICE AND DOMESTIC WATER SERVICE SHALL BE TESTED IN ACCORDANCE WITH DEPARTMENT OF ENVIRONMENTAL PROTECTION REGULATIONS. A MINIMUM OF 2 SEPARATE WATER SAMPLES SHALL BE TESTED AT A STATE CERTIFIED LABORATORY.
12. A MINIMUM OF 10 FEET CLEAR HORIZONTALLY SHALL BE MAINTAINED BETWEEN SANITARY SEWER SERVICES AND WATER SERVICES. WHENEVER CONDITIONS PREVENT A LATERAL SEPARATION OF 10 FEET TO A WATER SERVICE THE ELEVATION OF THE CROWN OF THE SEWER SHALL BE AT LEAST 18 INCHES BELOW THE INVERT OF THE WATER SERVICE.
13. ALL GRAVITY SEWER PIPE SHALL BE POLYVINYL CHLORIDE (PVC) SDR-35 UNLESS OTHERWISE NOTED.
14. WHERE SANITARY SEWERS CROSS WATER MAINS, THE SEWER SHALL BE LAID AT SUCH AN ELEVATION THAT THE CROWN OF THE SEWER IS AT LEAST 18 INCHES BELOW THE INVERT OF THE WATER MAIN. IF THE ELEVATION OF THE SEWER CANNOT BE VARIED TO MEET THIS REQUIREMENT, THE WATER MAIN SHALL BE RELOCATED TO PROVIDE THIS SEPARATION OR CONSTRUCTED WITH MECHANICAL-JOINT PIPE FOR A DISTANCE OF 10 FEET ON EACH SIDE OF THE SEWER. ONE FULL LENGTH OF WATER MAIN SHALL BE CENTERED OVER THE SEWER SO THAT BOTH JOINTS WILL BE AS FAR FROM THE SEWER AS POSSIBLE. WHENEVER IT IS IMPOSSIBLE TO OBTAIN VERTICAL SEPARATION AS STIPULATED ABOVE, BOTH THE WATER MAIN AND THE SEWER MAIN SHALL BE ENCASED IN CONCRETE FOR A MINIMUM DISTANCE OF 10 FEET FROM THE CROSSING POINT OF THE OTHER PIPE AS MEASURED NORMALLY FROM ALL POINTS ALONG THE PIPE.
15. THE LOCATIONS OF PROPOSED ELECTRIC, TELEPHONE, COMMUNICATION (E.T.C.) AND FIRE SERVICES ARE APPROXIMATE. THE PROJECT ELECTRICAL ENGINEER SHALL VERIFY THESE LOCATIONS PRIOR TO THE START OF CONSTRUCTION AND SHALL COORDINATE ALL E.T.C. WORK WITH THE APPROPRIATE UTILITY COMPANIES.
16. THE PROPOSED GAS SERVICE LOCATIONS ARE APPROXIMATE ONLY. THE CONTRACTOR SHALL COORDINATE THE GAS SERVICE INSTALLATION WITH THE GAS COMPANY. THE CLIENT AND CONTRACTOR SHALL CONFIRM THE LOCATION AND SIZE OF THE PROPOSED GAS SERVICES WITH THE GAS COMPANY.
17. IF DURING THE CONSTRUCTION PROCESS THE NEED FOR EXCAVATION DEWATERING ARISES, A DEWATERING FILTER PIT SHALL BE CONSTRUCTED IN ACCORDANCE WITH APPROPRIATE STORMWATER MANAGEMENT AND ENGINEERING PRACTICES.

NOTES:

1. ALL INDIVIDUAL UNIT UTILITY SERVICES SHALL BE DESIGNED FOR TOWN SUBMISSION AND REVIEW.
2. PROPOSED GRADING AND UTILITY CONNECTIONS SHOWN ARE PRELIMINARY IN NATURE AND ARE SUBJECT TO CHANGE ONCE MORE DEFINITIVE SITE PLANS ARE PREPARED.

© MCKENZIE ENGINEERING GROUP, INC.

M:\MEG\2007 PROJECTS\27-135\DWGS\CUT SHEETS\SUBMISSION R6\27-135 C-2 (R6).DWG

REV	DATE	DESCRIPTION	BY	APP
1	1/6/18	RECONFIGURATION	SBS	BCM
2	1/19/18	REVIEW COMMENTS	SBS	BCM
3	2/2/18	REVIEW COMMENTS	SBS	BCM
4	3/9/18	REVIEW COMMENTS	SBS	BCM
5	4/25/18	REVIEW COMMENTS	SBS	BCM

MCKENZIE ENGINEERING GROUP
Assinippi Office Park
150 Longwater Drive, Suite 101
Norwell, MA 02061
Ph: 781-792-3900
www.mckeng.com

COMPREHENSIVE PERMIT PLAN

KNOWN AS

RIVER STONE

(ASSESSORS MAP 124, LOTS 70-75 & LOT 26)
VIKING LANE & WARD STREET
HINGHAM, MASSACHUSETTS

PROFESSIONAL ENGINEER:

COMMONWEALTH OF MASSACHUSETTS — BRADLEY C. McKENZIE — CIVIL — No. 36913 — REGISTERED PROFESSIONAL ENGINEER

ZBA PERMIT PLAN

APPLICANT:
RIVER STONE, LLC
293R WASHINGTON STREET
NORWELL, MASSACHUSETTS 02061

DRAWN BY:	JLS
DESIGNED BY:	- -
CHECKED BY:	- -
APPROVED BY:	- -
DATE:	10/7/2015
SCALE:	1"=40'
PROJECT NO.:	27-135

DWG. TITLE:

Grading & Utility Plan

DWG. NO: C-2

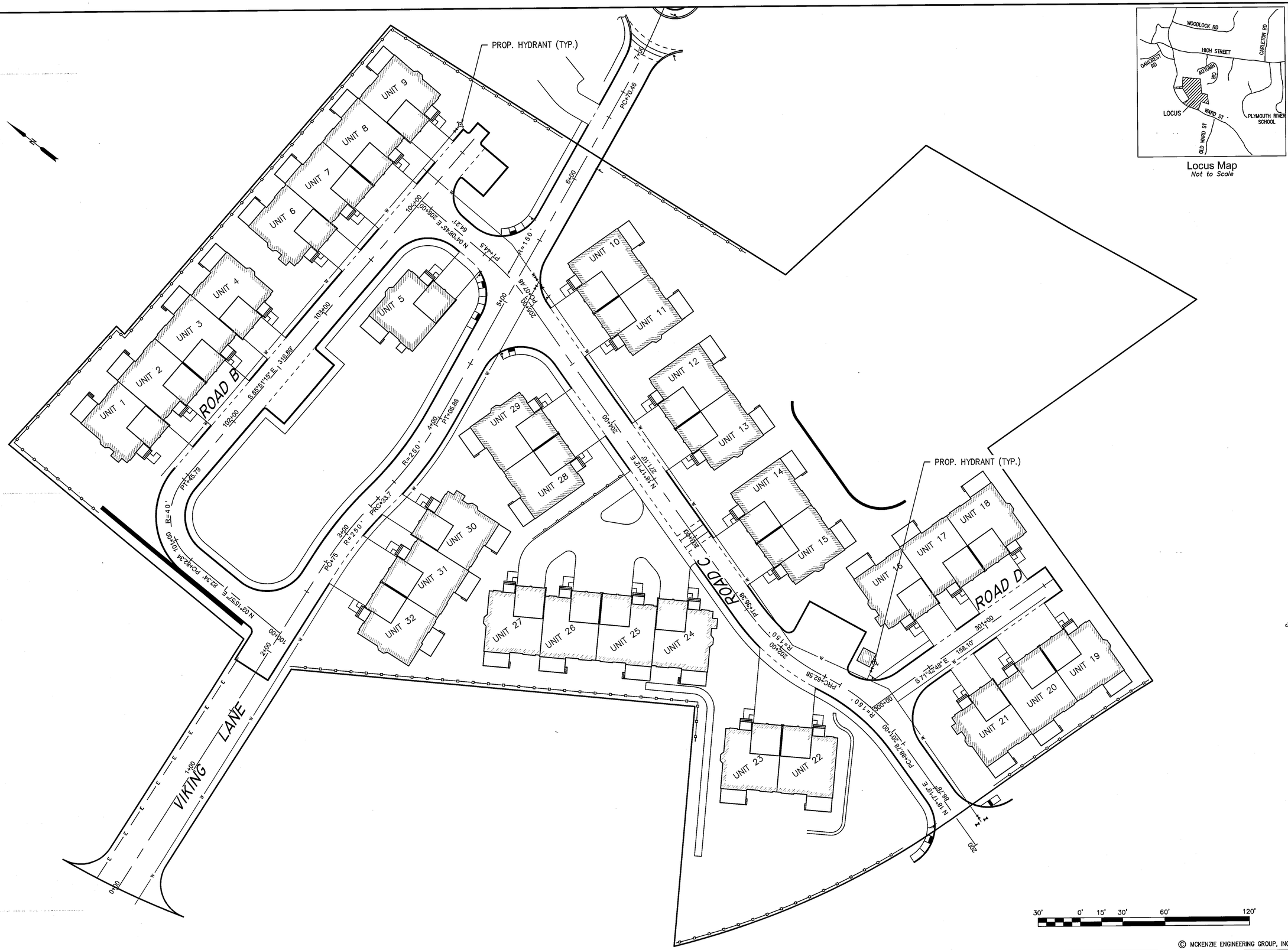

Locus Map
Not to Scale

REV	DATE	DESCRIPTION	BY	APP
5	4/25/18	NEW SHEET	SBS	BCM

MCKENZIE ENGINEERING GROUP
Assinippi Office Park
150 Longwater Drive, Suite 101
Norwell, MA 02061
Ph: 781-792-3900
www.mckeng.com

COMPREHENSIVE PERMIT PLAN

KNOWN AS

RIVER STONE

(ASSESSORS MAP 124, LOTS 70-75 & LOT 26)
VIKING LANE & WARD STREET
HINGHAM, MASSACHUSETTS

PROFESSIONAL ENGINEER:
COMMONWEALTH OF MASSACHUSETTS
BRADLEY C. McKENZIE
CIVIL
No. 36917
REGISTERED PROFESSIONAL ENGINEER

ZBA PERMIT PLAN

APPLICANT:
RIVER STONE, LLC
293R WASHINGTON STREET
NORWELL, MASSACHUSETTS 02061

DRAWN BY:	JLS
DESIGNED BY:	- -
CHECKED BY:	- -
APPROVED BY:	- -
DATE:	10/7/2015
SCALE:	1"=30'
PROJECT NO.:	27-135

DWG. TITLE:
Hydrant Location Plan

DWG. NO: C-2A

© MCKENZIE ENGINEERING GROUP, INC.

M:\MEG\2007 PROJECTS\27-135\DWGS\CUT SHEETS\SUBMISSION R6\27-135 C-2A (R6).DWG

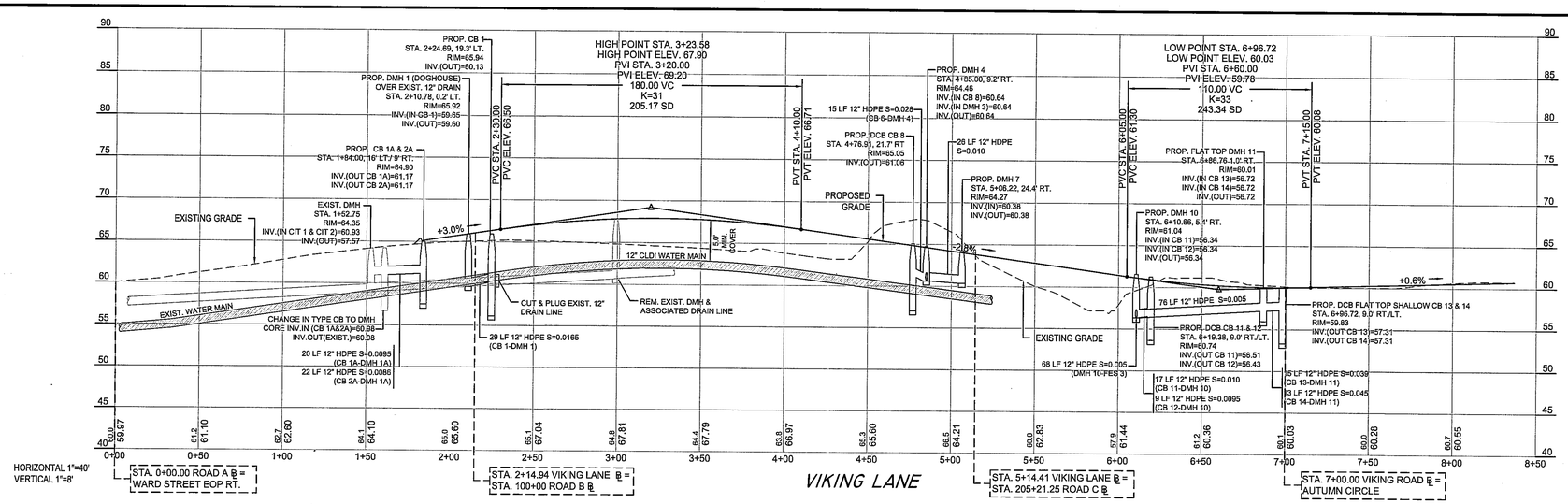

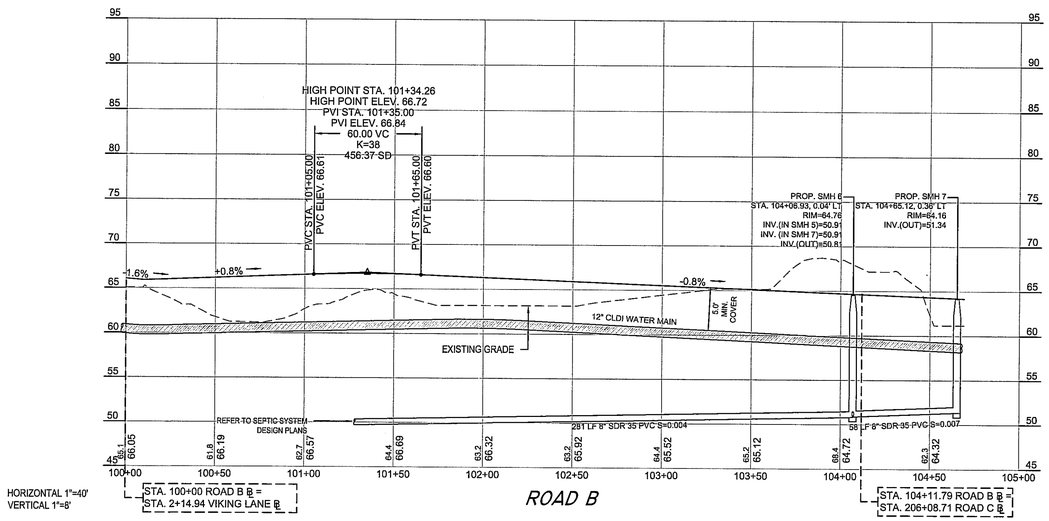

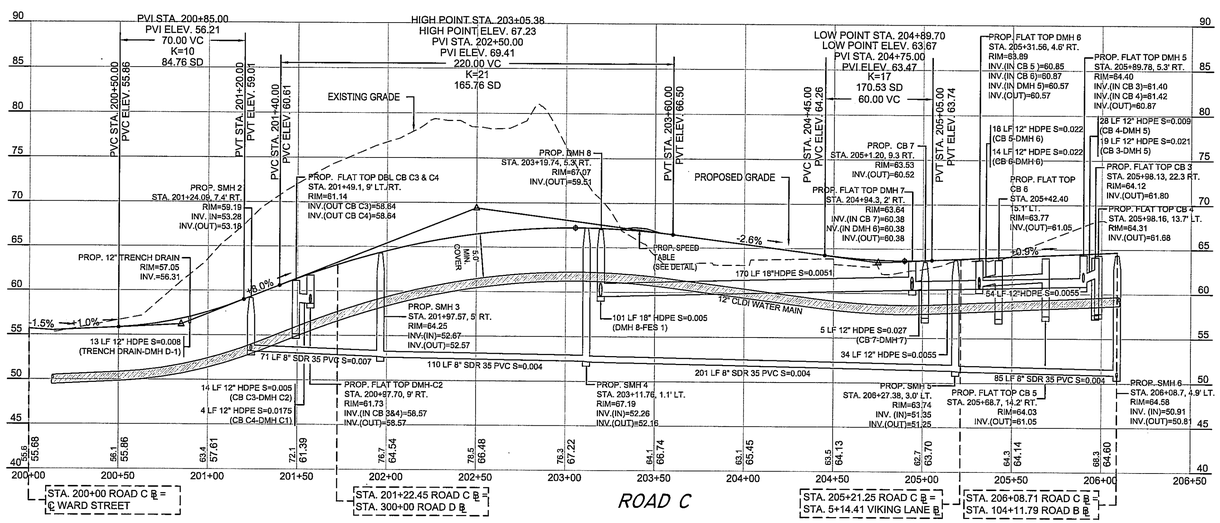

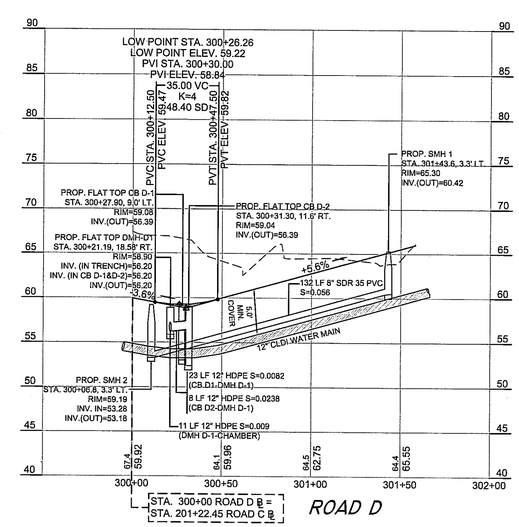

REV	DATE	DESCRIPTION	BY	APP
1	1/8/18	RECONFIGURATION	SBS	BCM
2	1/19/18	NO CHANGES	SBS	BCM
3	2/2/18	REVIEW COMMENTS	SBS	BCM
4	3/9/18	REVIEW COMMENTS	SBS	BCM
5	4/25/18	REVIEW COMMENTS	SBS	BCM

MCKENZIE ENGINEERING GROUP
Assinippi Office Park
150 Longwater Drive, Suite 101
Norwell, MA 02061
Ph: 781-792-3900
www.mckeng.com

COMPREHENSIVE PERMIT PLAN

KNOWN AS

RIVER STONE

(ASSESSORS MAP 124, LOTS 70-75 & LOT 26)

VIKING LANE & WARD STREET

HINGHAM, MASSACHUSETTS

PROFESSIONAL ENGINEER:

COMMONWEALTH OF MASSACHUSETTS
BRADLEY C. McKENDIE
CIVIL
No. 30917
REGISTERED PROFESSIONAL ENGINEER

ZBA PERMIT PLAN

APPLICANT:
RIVER STONE, LLC
293R WASHINGTON STREET
NORWELL, MASSACHUSETTS 02061

DRAWN BY:	JLS
DESIGNED BY:	- -
CHECKED BY:	- -
APPROVED BY:	- -
DATE:	10/7/2015
SCALE:	1"=40'
PROJECT NO.:	27-135

DWG. TITLE:

Roadway Profiles

DWG. NO:

C-3

© MCKENZIE ENGINEERING GROUP, INC.

M:\MEG\2007 PROJECTS\27-135\DWGS\CUT SHEETS\SUBMISSION R6\27-135 C-3 (R6).DWG

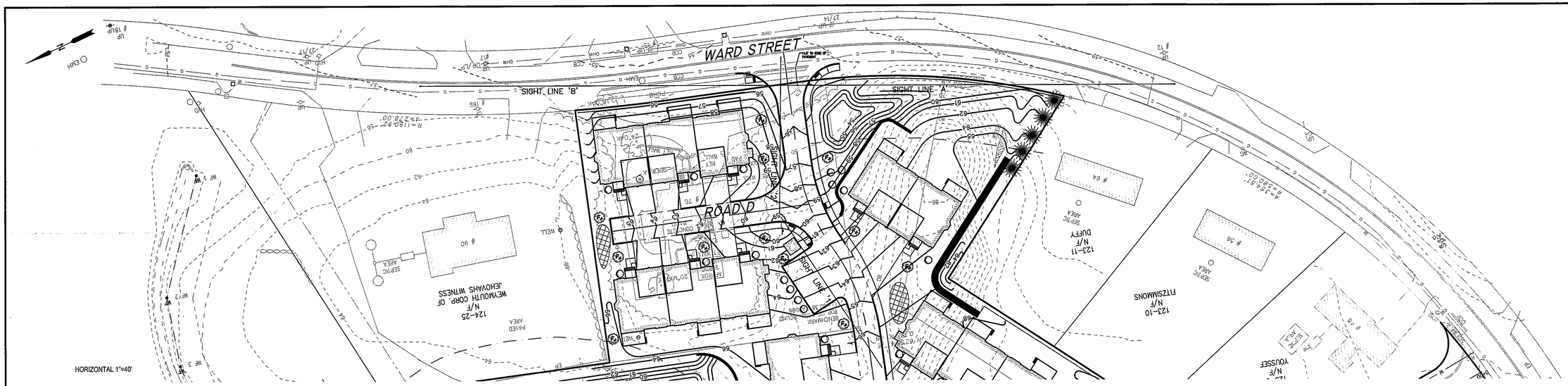

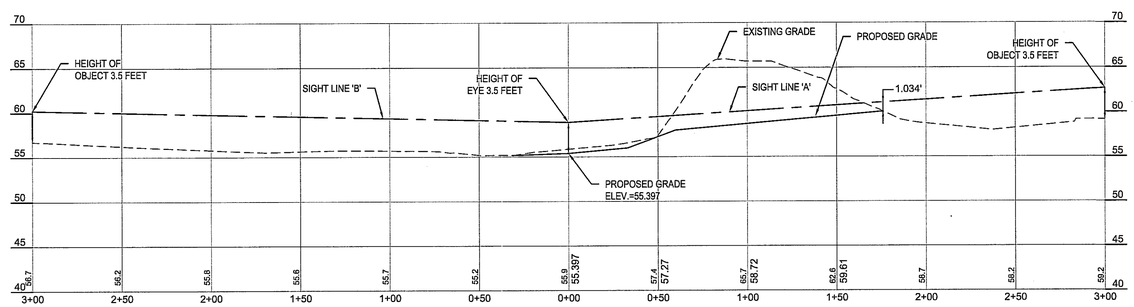

WARD STREET SIGHT LINE 'B' LEFT

WARD STREET SIGHT LINE 'A' RIGHT

HORIZONTAL 1"=40'
VERTICAL 1"=8'

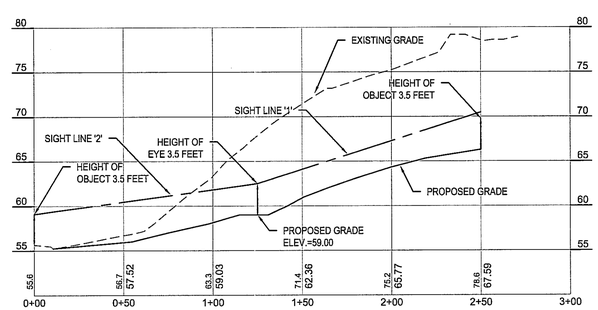

ROAD D SIGHT LINE '2' LEFT

ROAD D SIGHT LINE '1' RIGHT

HORIZONTAL 1"=40'
VERTICAL 1"=8'

NOTE:
SIGNS, LANDSCAPING AND OTHER FEATURES LOCATED WITHIN THE SIGHT TRIANGLE AREAS SHALL BE DESIGNED, INSTALLED AND MAINTAINED SO AS NOT TO EXCEED 2.5 FEET IN HEIGHT. SNOW WINDROWS LOCATED WITHIN THE SIGHT TRIANGLE AREAS THAT EXCEED 3.5 FEET IN HEIGHT OR WOULD OTHERWISE INHIBIT SIGHT LINES SHALL BE PROMPTLY REMOVED.

© MCKENZIE ENGINEERING GROUP, INC.

M:\MEG\2007 PROJECTS\27-135\DWGS\CUT SHEETS\SUBMISSION R6\27-135 C-3A (R6).DWG

REV	DATE	DESCRIPTION	BY	APP
1	1/8/18	RECONFIGURATION	SBS	BCM
2	1/19/18		SBS	BCM
3	2/2/18		SBS	BCM
4	3/9/18	NEW SHEET	SBS	BCM
5	4/25/18	REVIEW COMMENTS	SBS	BCM

MCKENZIE ENGINEERING GROUP
Assinippi Office Park
150 Longwater Drive, Suite 101
Norwell, MA 02061
Ph: 781-792-3900
www.mckeng.com

COMPREHENSIVE PERMIT PLAN

KNOWN AS

RIVER STONE

(ASSESSORS MAP 124, LOTS 70-75 & LOT 26)
VIKING LANE & WARD STREET
HINGHAM, MASSACHUSETTS

PROFESSIONAL ENGINEER:
COMMONWEALTH OF MASSACHUSETTS
BRADLEY C. MCKENZIE
CIVIL
No. 36917
REGISTERED PROFESSIONAL ENGINEER

ZBA PERMIT PLAN

APPLICANT:
RIVER STONE, LLC
293R WASHINGTON STREET
NORWELL, MASSACHUSETTS 02061

DRAWN BY:	JLS
DESIGNED BY:	- -
CHECKED BY:	- -
APPROVED BY:	- -
DATE:	10/7/2015
SCALE:	1"=40'
PROJECT NO.:	27-135

DWG. TITLE:
Sight Triangles

DWG. NO:
C-3A

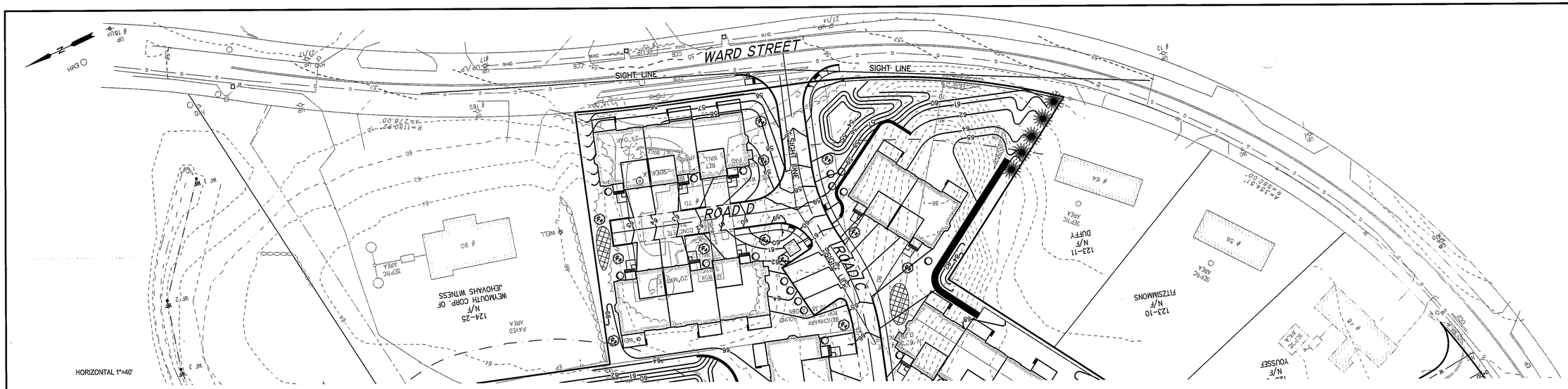

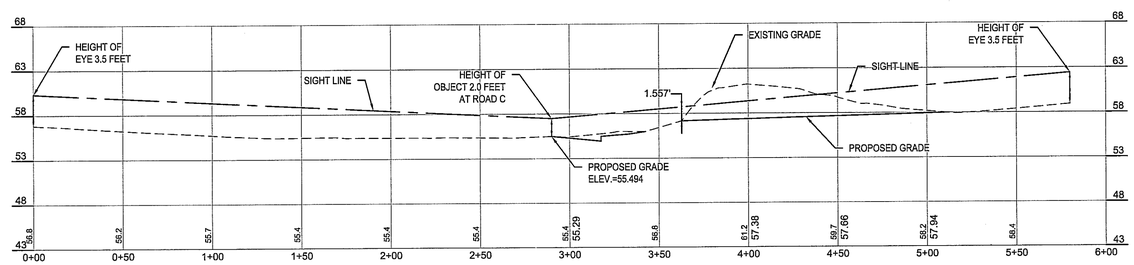

WARD STREET STOPPING SIGHT DISTANCE

HORIZONTAL 1"=40'
VERTICAL 1"=8'

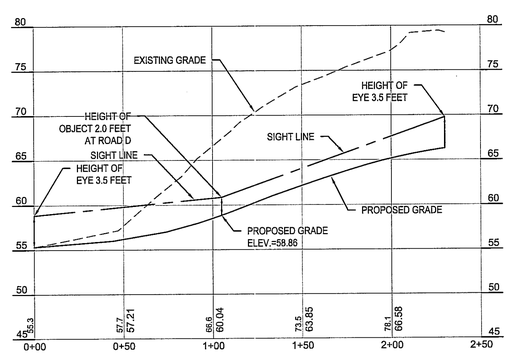

ROAD C STOPPING SIGHT DISTANCE

HORIZONTAL 1"=40'
VERTICAL 1"=8'

NOTE:
SIGNS, LANDSCAPING AND OTHER FEATURES LOCATED WITHIN THE SIGHT TRIANGLE AREAS SHALL BE DESIGNED, INSTALLED AND MAINTAINED SO AS NOT TO EXCEED 2.5 FEET IN HEIGHT. SNOW WINDROWS LOCATED WITHIN THE SIGHT TRIANGLE AREAS THAT EXCEED 3.5 FEET IN HEIGHT OR WOULD OTHERWISE INHIBIT SIGHT LINES SHALL BE PROMPTLY REMOVED.

© MCKENZIE ENGINEERING GROUP, INC.

M:\MEG\2007 PROJECTS\27-135\DWGS\CUT SHEETS\SUBMISSION R6\27-135 C-3B (R6).DWG

REV	DATE	DESCRIPTION	BY	APP
5	4/25/18	NEW SHEET	SBS	BCM

MCKENZIE ENGINEERING GROUP
Assinippi Office Park
150 Longwater Drive, Suite 101
Norwell, MA 02061
Ph: 781-792-3900
www.mckeng.com

COMPREHENSIVE PERMIT PLAN

KNOWN AS
RIVER STONE
(ASSESSORS MAP 124, LOTS 70-75 & LOT 26)
VIKING LANE & WARD STREET
HINGHAM, MASSACHUSETTS

PROFESSIONAL ENGINEER:
COMMONWEALTH OF MASSACHUSETTS
BRADLEY C. McKENZIE
CIVIL
No. 36917
REGISTERED PROFESSIONAL ENGINEER

APPLICANT:
RIVER STONE, LLC
293R WASHINGTON STREET
NORWELL, MASSACHUSETTS 02061

ZBA PERMIT PLAN

DRAWN BY:	JLS
DESIGNED BY:	- -
CHECKED BY:	- -
APPROVED BY:	- -
DATE:	10/7/2015
SCALE:	1"=40'
PROJECT NO.:	27-135

DWG. TITLE:
Sight Triangles

DWG. NO:
C-3B

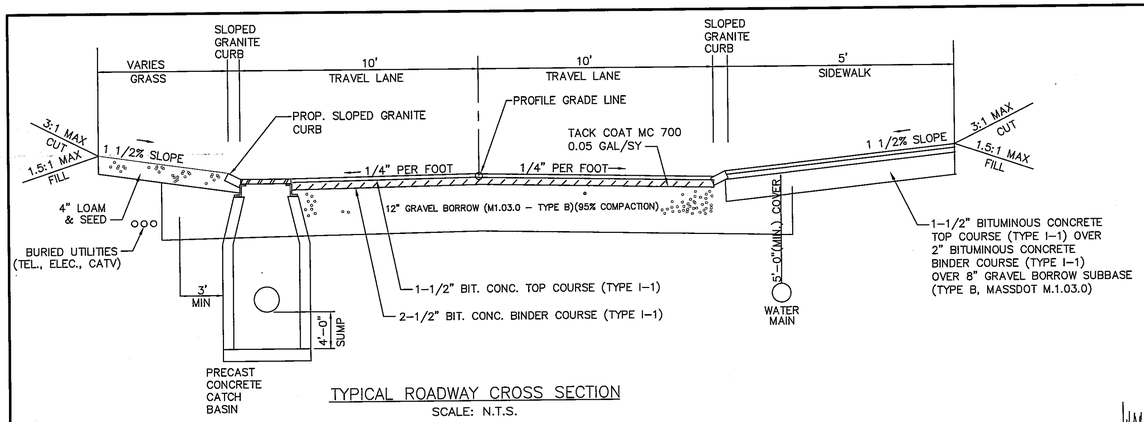

TYPICAL ROADWAY CROSS SECTION
SCALE: N.T.S.

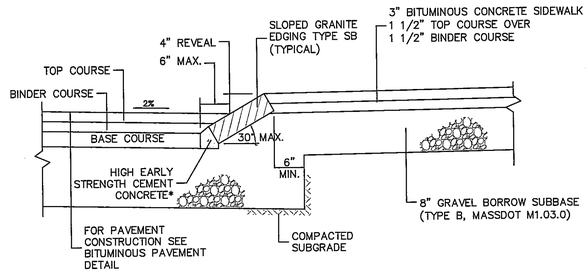

SLOPED GRANITE CURB WITH BITUMINOUS CONC. SIDEWALK
SCALE: N.T.S.

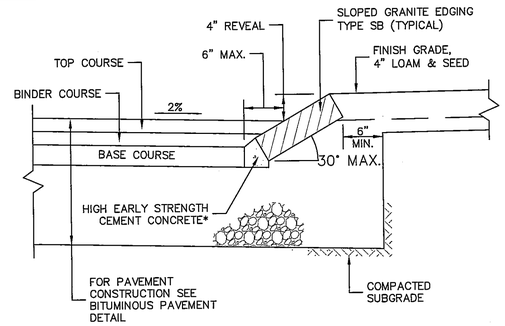

SLOPED GRANITE CURB DETAIL
SCALE: N.T.S.

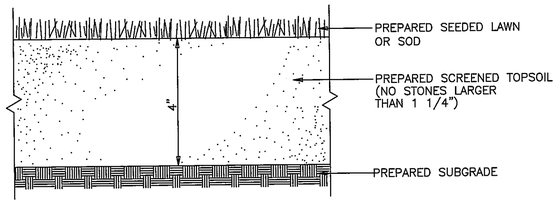

NOTES:
1. TOP OF LOAM (TOPSOIL) IS FINISHED GRADE.
2. LOAM AND SOD OR SEED, SHALL CONFORM TO MASSDOT MATERIAL SPECIFICATIONS M1.05.0, M1.07.0 AND M1.06.1, AND CONSTRUCTION METHODS 751.60 TO 751.63.

SEEDED OR SODDED LAWN DETAIL
SCALE: N.T.S.

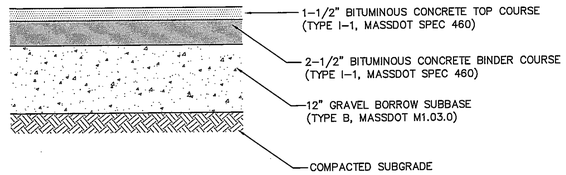

BITUMINOUS CONCRETE PAVEMENT DETAIL
SCALE: N.T.S.

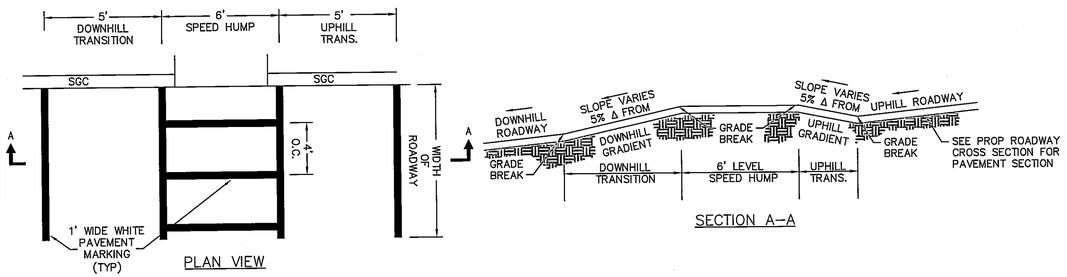

SPEED HUMP
SCALE: N.T.S.

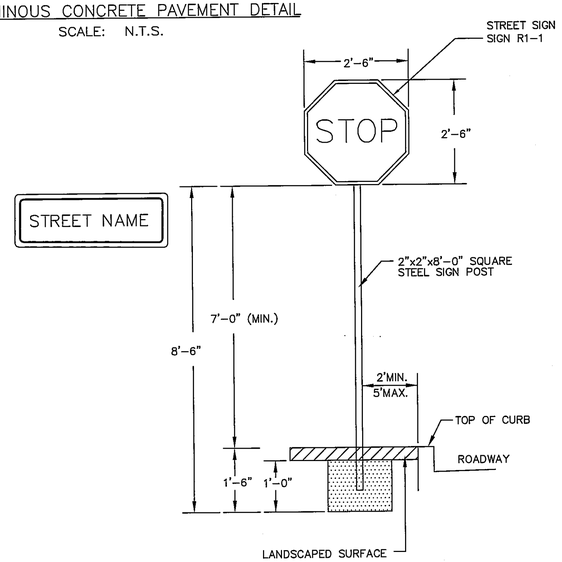

TYPICAL SIGN DETAIL
SCALE: N.T.S.

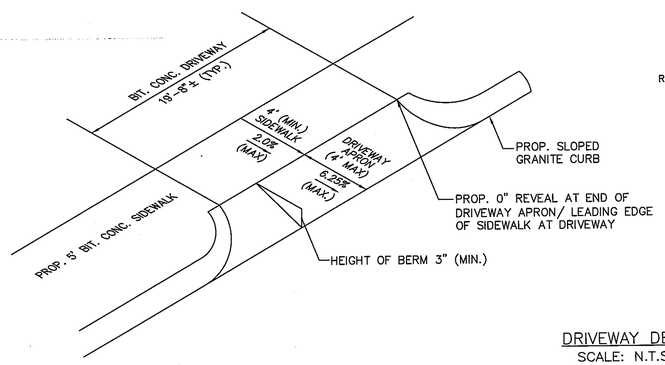

DRIVEWAY DETAIL
SCALE: N.T.S.

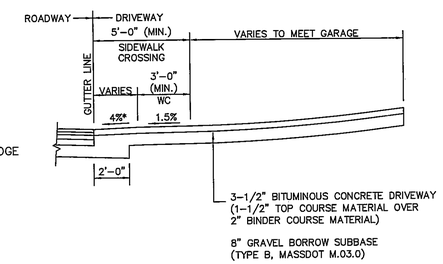

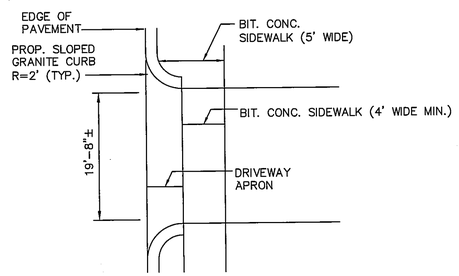

PLAN VIEW

TYPICAL DRIVEWAY DETAIL W/SIDEWALK
SCALE: N.T.S.

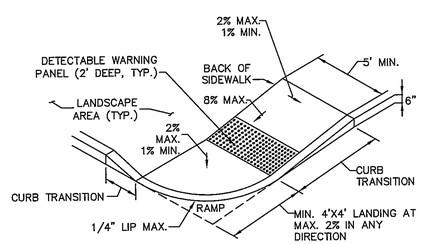

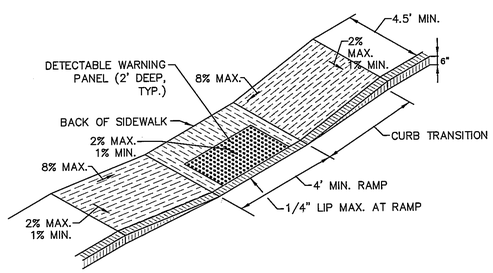

BITUMINOUS CONCRETE SIDEWALK RAMPS
SCALE: N.T.S.

© MCKENZIE ENGINEERING GROUP, INC.

M:\MEG\2007 PROJECTS\27-135\DWGS\CUT SHEETS\SUBMISSION R6\27-135 DETAILS (R6).DWG

REV	DATE	DESCRIPTION	BY	APP
1	1/8/18	RECONFIGURATION	SBS	BCM
2	1/19/18	REVIEW COMMENTS	SBS	BCM
3	2/2/18	NO CHANGES	SBS	BCM
4	3/9/18	REVIEW COMMENTS	SBS	BCM
5	4/25/18	NO CHANGES	SBS	BCM

MEG
MCKENZIE ENGINEERING GROUP
Assinippi Office Park
150 Longwater Drive, Suite 101
Norwell, MA 02061
Ph: 781-792-3900
www.mckeng.com

COMPREHENSIVE PERMIT PLAN

KNOWN AS
RIVER STONE
(ASSESSORS MAP 124, LOTS 70-75 & LOT 26)
VIKING LANE & WARD STREET
HINGHAM, MASSACHUSETTS

PROFESSIONAL ENGINEER:
COMMONWEALTH OF MASSACHUSETTS
BRADLEY C. MCKENZIE
CIVIL
No. 36917
REGISTERED PROFESSIONAL ENGINEER

ZBA PERMIT PLAN

APPLICANT:
RIVER STONE, LLC
293R WASHINGTON STREET
NORWELL, MASSACHUSETTS 02061

DRAWN BY:	JLS
DESIGNED BY:	- -
CHECKED BY:	- -
APPROVED BY:	- -
DATE:	10/7/2015
SCALE:	
PROJECT NO.:	27-135

DWG. TITLE:
Construction Details
Sheet 1 of 7

DWG. NO:
C-4

GENERAL UTILITY NOTES

1. THE CONTRACTOR IS SPECIFICALLY CAUTIONED THAT THE LOCATION AND/OR ELEVATION OF EXISTING UTILITIES AND STRUCTURES AS SHOWN ON THESE PLANS IS BASED ON RECORDS OF VARIOUS UTILITY COMPANIES AND WHERE POSSIBLE, MEASUREMENTS TAKEN IN THE FIELD. THIS INFORMATION IS NOT TO BE RELIED UPON AS BEING EXACT OR COMPLETE. THE LOCATION OF ALL UNDERGROUND UTILITIES AND STRUCTURES SHALL BE VERIFIED IN THE FIELD BY THE CONTRACTOR PRIOR TO THE START OF CONSTRUCTION. THE CONTRACTOR MUST CONTACT THE APPROPRIATE UTILITY COMPANY, ANY GOVERNING PERMITTING AUTHORITY, AND "DIGSAFE" AT LEAST 72 HOURS PRIOR TO ANY EXCAVATION WORK TO REQUEST EXACT FIELD LOCATION OF UTILITIES AND THE ENGINEER SHALL BE NOTIFIED IN WRITING OF ANY UTILITIES INTERFERING WITH THE PROPOSED CONSTRUCTION AND APPROPRIATE REMEDIAL ACTION TAKEN BEFORE PROCEEDING WITH THE WORK. IT SHALL BE THE RESPONSIBILITY OF THE CONTRACTOR TO RELOCATE ALL EXISTING UTILITIES WHICH CONFLICT WITH THE PROPOSED IMPROVEMENTS SHOWN ON THE PLAN.
2. THE CONTRACTOR SHALL BE RESPONSIBLE FOR ESTABLISHING AND MAINTAINING ALL CONTROL POINTS AND BENCHMARKS NECESSARY FOR THE WORK.
3. THE CONTRACTOR SHALL EXCAVATE THE TEST PITS IN THE LOCATIONS SHOWN ON THE PLAN PRIOR TO COMMENCING WORK TO VERIFY THE ELEVATIONS AND LOCATIONS OF EXISTING UTILITIES. THE CONTRACTOR SHALL PROVIDE THE OWNER AND ENGINEER WITH THE RESULTS PRIOR TO COMMENCING ANY WORK.
4. ALL WATER SERVICES SHALL BE INSTALLED WITH 5' OF COVER EXCEPT AS NOTED OR DETAILED OTHERWISE.
5. DOMESTIC WATER SERVICES 2 INCHES AND SMALLER SHALL BE TYPE K COPPER TUBING AND SHALL BE INSTALLED WITH APPROPRIATELY SIZED CORPORATION STOP WITH APPROVED SADDLE, CURB STOP, GATE AND BOX.
6. SEE SHEET C-9 FOR WATER MAIN CONSTRUCTION DETAILS, NOTES, AND SPECIFICATIONS.
7. THE CONTRACTOR SHALL PROVIDE INLET PROTECTION, SUCH AS SILT SACKS, AT ALL CATCH BASINS TO PREVENT SEDIMENT FROM ENTERING THE EXTENDED DETENTION WETLAND AREA. INLET PROTECTION WILL ALLOW THE STORM DRAIN INLETS TO BE USED BEFORE FINAL STABILIZATION.
8. THE CONTRACTOR SHALL PROVIDE SIEVE ANALYSIS SUBMITTALS TO THE ENGINEER FOR APPROVAL PRIOR TO INSTALLATION OF THE SAND/SILT MATERIAL TO BE USED.

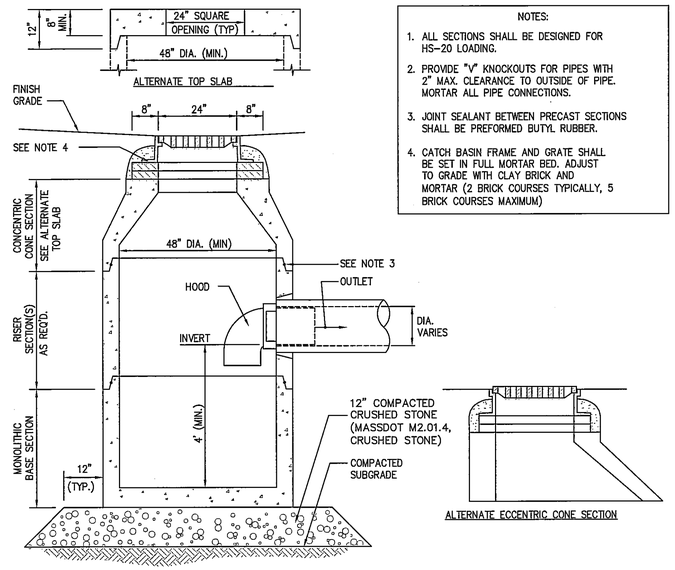

NOTES:
1. ALL SECTIONS SHALL BE DESIGNED FOR HS-20 LOADING.
2. PROVIDE "V" KNOCKOUTS FOR PIPES WITH 2" MAX. CLEARANCE TO OUTSIDE OF PIPE. MORTAR ALL PIPE CONNECTIONS.
3. JOINT SEALANT BETWEEN PRECAST SECTIONS SHALL BE PREFORMED BUTYL RUBBER.
4. CATCH BASIN FRAME AND GRATE SHALL BE SET IN FULL MORTAR BED. ADJUST TO GRADE WITH CLAY BRICK AND MORTAR (2 BRICK COURSES TYPICALLY, 5 BRICK COURSES MAXIMUM)

CATCH BASIN W/HOOD
SCALE: N.T.S.

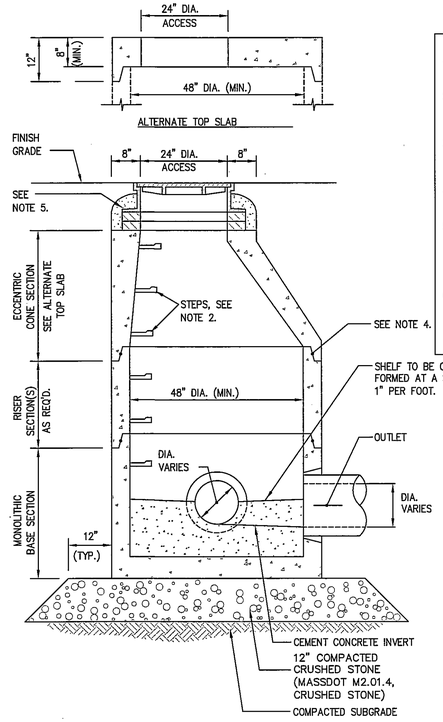

NOTES:
1. ALL SECTIONS SHALL BE DESIGNED FOR HS-20 LOADING.
2. COPOLYMER MANHOLE STEPS SHALL BE INSTALLED AT 12" O.C. FOR THE FULL DEPTH OF THE STRUCTURE.
3. PROVIDE "V" KNOCKOUTS FOR PIPES WITH 2" MAX. CLEARANCE TO OUTSIDE OF PIPE. MORTAR ALL PIPE CONNECTIONS.
4. JOINT SEALANT BETWEEN PRECAST SECTIONS SHALL BE PREFORMED BUTYL RUBBER.
5. DRAIN MANHOLE FRAME AND COVER SHALL BE SET IN FULL MORTAR BED. ADJUST TO GRADE WITH CLAY BRICK AND MORTAR (2 BRICK COURSES TYPICALLY, 5 BRICK COURSES MAXIMUM)
6. DRAIN MANHOLE COVER SHALL HAVE A DIAMOND PATTERN, PICKHOLES & THE WORD "DRAIN" CAST IN 3" LETTERS (LEBARON LK 110-A).

DRAIN MANHOLE DETAIL
SCALE: N.T.S.

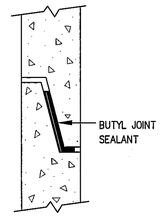

PREFORMED FLEXIBLE JOINT SEALANT

MANHOLE JOINT DETAILS
SCALE: N.T.S.

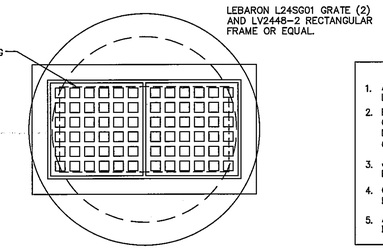

NOTES:
1. ALL SECTIONS SHALL BE DESIGNED FOR HS-20 LOADING.
2. PROVIDE DOGHOUSE OPENING FOR PIPES WITH 2" MAX. CLEARANCE TO OUTSIDE OF PIPE. TOP SLAB SHALL NOT REST DIRECTLY ON PIPE. GROUT ALL PIPE CONNECTIONS (NON-SHRINK GROUT).
3. JOINT SEALANT BETWEEN PRECAST SECTIONS SHALL BE PREFORMED BUTYL RUBBER.
4. CATCH BASIN FRAME AND GRATE (4" DEPTH) SHALL BE SET IN FULL MORTAR BED.
5. ADJUST TO FINISH GRADE WITH CLAY BRICK AND MORTAR AS REQUIRED.

DOUBLE GRATE CATCH BASIN DETAIL
SCALE: N.T.S.

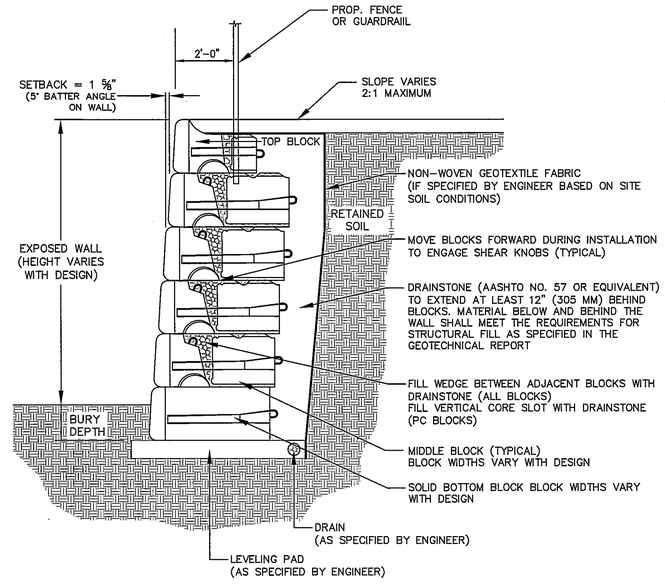

NOTE:
DESIGN OF PRECAST CONCRETE MODULAR BLOCK RETAINING WALL SHALL BE BY A PROFESSIONAL CIVIL STRUCTURAL ENGINEER REGISTERED IN THE COMMONWEALTH OF MASSACHUSETTS

MODULAR BLOCK GRAVITY RETAINING WALL DETAIL
SCALE: N.T.S.

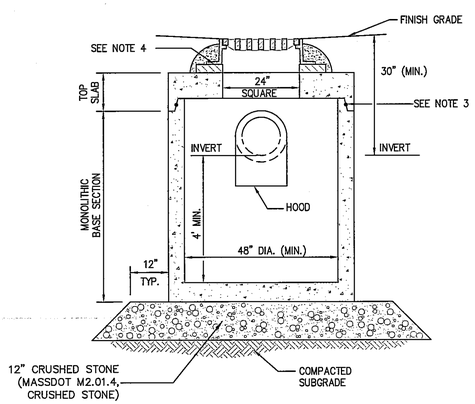

NOTES:
1. ALL SECTIONS SHALL BE DESIGNED FOR HS-20 LOADING.
2. PROVIDE DOGHOUSE OPENING FOR PIPES WITH 2" MAX. CLEARANCE TO OUTSIDE OF PIPE. TOP SLAB SHALL NOT REST DIRECTLY ON PIPE. GROUT ALL PIPE CONNECTIONS (NON-SHRINK GROUT).
3. JOINT SEALANT BETWEEN PRECAST SECTIONS SHALL BE PREFORMED BUTYL RUBBER.
4. CATCH BASIN FRAME AND GRATE (4" DEPTH) SHALL BE SET IN FULL MORTAR BED.
5. ADJUST TO FINISH GRADE WITH CLAY BRICK AND MORTAR AS REQUIRED.

CATCH BASIN SHALLOW COVER WITH HOOD
SCALE: N.T.S.

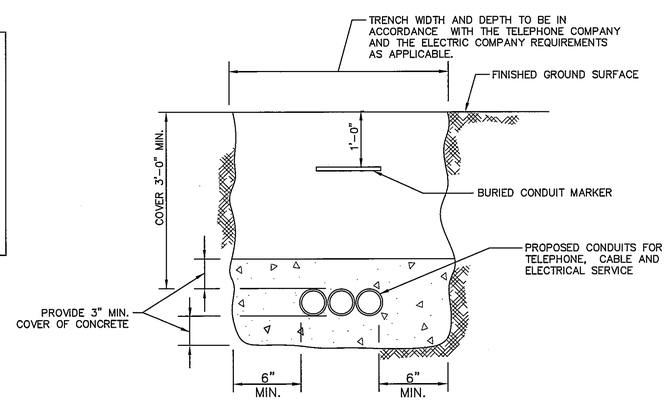

TYPICAL ELECTRIC/TELEPHONE/CABLE CONDUIT (US-UTILITY SERVICE)
SCALE: N.T.S.

© MCKENZIE ENGINEERING GROUP, INC.

M:\MEG\2007 PROJECTS\27-135\DWGS\CUT SHEETS\SUBMISSION R6\27-135 DETAILS (R6).DWG

REV	DATE	DESCRIPTION	BY	APP
1	1/8/18	RECONFIGURATION	SBS	BCM
2	1/19/18	REVIEW COMMENTS	SBS	BCM
3	2/2/18	REVIEW COMMENTS	SBS	BCM
4	3/9/18	REVIEW COMMENTS	SBS	BCM
5	4/25/18	REVIEW COMMENTS	SBS	BCM

MCKENZIE ENGINEERING GROUP
Assinippi Office Park
150 Longwater Drive, Suite 101
Norwell, MA 02061
Ph: 781-792-3900
www.mckeng.com

COMPREHENSIVE PERMIT PLAN

KNOWN AS
RIVER STONE
(ASSESSORS MAP 124, LOTS 70-75 & LOT 26)
VIKING LANE & WARD STREET
HINGHAM, MASSACHUSETTS

PROFESSIONAL ENGINEER:
COMMONWEALTH OF MASSACHUSETTS
BRADLEY C. McKENZIE
CIVIL
No. 36917
REGISTERED PROFESSIONAL ENGINEER

ZBA PERMIT PLAN

APPLICANT:
RIVER STONE, LLC
293R WASHINGTON STREET
NORWELL, MASSACHUSETTS 02061

DRAWN BY:	JLS
DESIGNED BY:	- -
CHECKED BY:	- -
APPROVED BY:	- -
DATE:	10/7/2015
SCALE:	
PROJECT NO.:	27-135

DWG. TITLE:
Construction Details
Sheet 2 of 7

DWG. NO: C-5

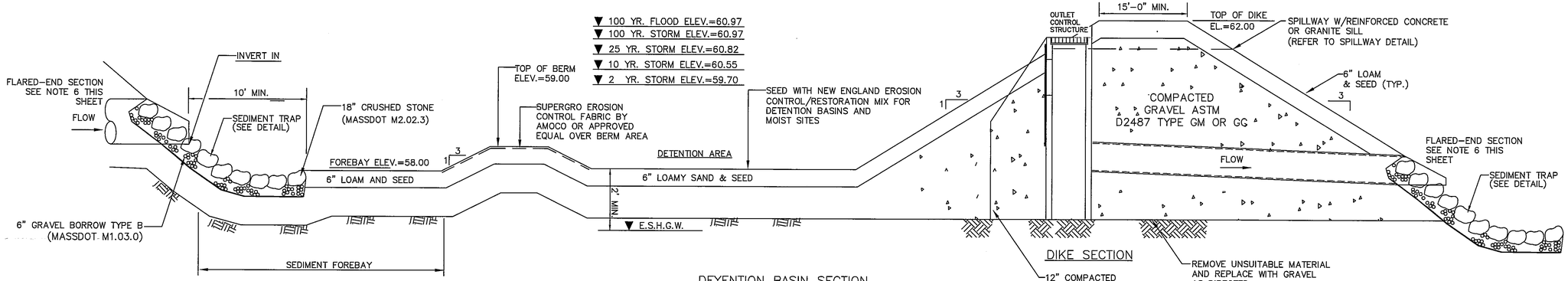

DEYENTION BASIN SECTION
SCALE: N.T.S.

DIKE SECTION

SPILLWAY SCHEDULE

SPILLWAY ELEV.	LENGTH	100-YR FLOOD ELEV.
61.00	10 FT	60.97

NOTE:
1. RIP RAP TO BE HAND CHINKED WITH A SMOOTH SURFACE ALONG THE TOP OF THE DIKE AND A ROUGH SURFACE ALONG THE DOWNSTREAM FACE AND TOE OF THE DIKE. STONE TO MEET MASSDOT (M2.02.3) REQUIREMENTS.

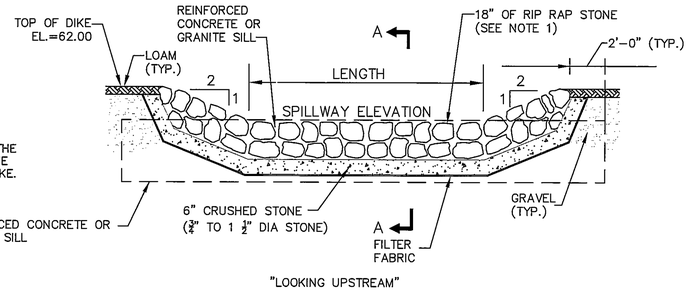

SPILLWAY DETAIL
SCALE: N.T.S.

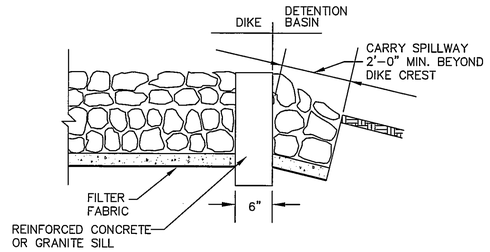

SECTION A-A

NOTES:

1. FILL AND BASE FOR DIKES SHALL INSURE WATER TIGHTNESS AND STABILITY.
2. BASIN SIDE SLOPES AND BOTTOM SHALL BE PROVIDED WITH 6" OF LOAMY SAND, SEEDED AT A RATE OF 2 POUNDS OF RED TOP, 15 POUNDS OF CREEPING RED FESCUE AND 20 POUNDS TALL FESCUE PER ACRE.
3. THE CONTRACTOR SHALL NOT DISCHARGE SEDIMENT-LADEN WATER TO INFILTRATION BASIN COMPONENTS DURING CONSTRUCTION, INCLUDING DEWATERING OR TEMPORARY SURFACE RUNOFF.
4. ALL CONTRIBUTING AREAS TO THE BASIN SHALL BE FULLY STABILIZED PRIOR TO THE BASIN BEING PLACED INTO SERVICE.
5. THE CONTRACTOR SHALL PROVIDE PROTECTION ABOVE AND AROUND THE INFILTRATION AREA OF THE BASIN FROM CONSTRUCTION VEHICLE ACTIVITY. NO HEAVY EQUIPMENT SHALL BE ALLOWED ON THE BASIN FLOORS AFTER INSTALLATION. CONTRACTOR SHALL MINIMIZE CONSTRUCTION EQUIPMENT TRAFFIC WITHIN THE BASIN AT ALL TIMES DURING AND AFTER CONSTRUCTION.
6. ALL FLARED END SECTIONS SHALL BE EQUIPPED WITH TRASH RACKS.

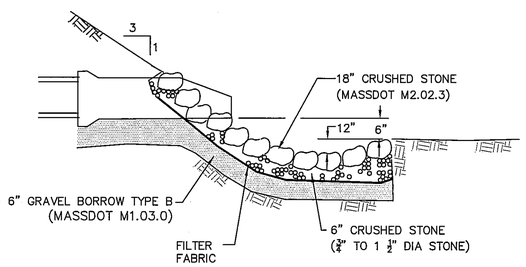

TYPICAL SEDIMENT TRAP DETAIL
SCALE: N.T.S.

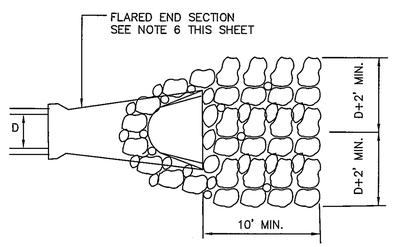

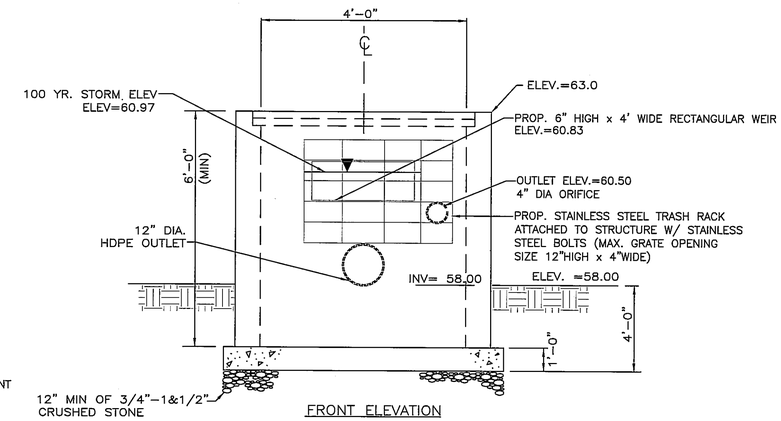

FRONT ELEVATION

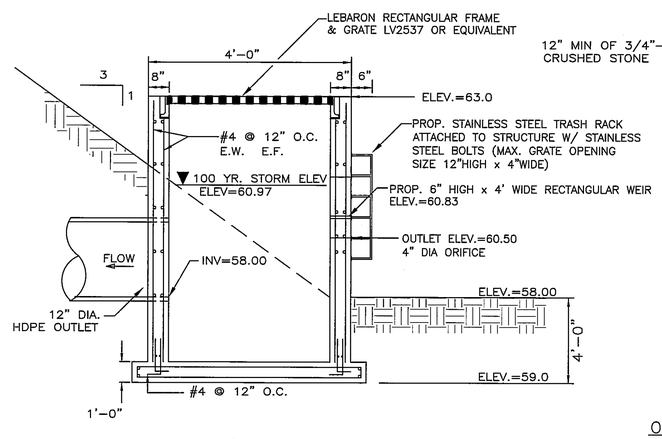

SECTION A-A

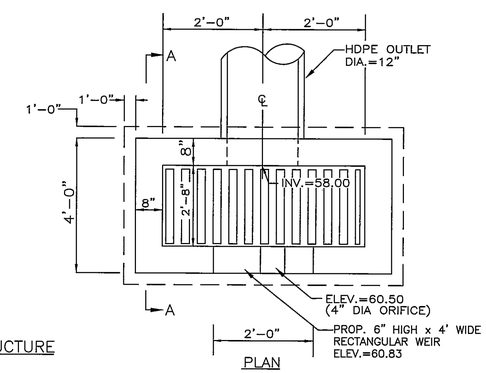

PLAN

OUTLET CONTROL STRUCTURE
SCALE: N.T.S.

© MCKENZIE ENGINEERING GROUP, INC.

REV	DATE	DESCRIPTION	BY	APP
1	1/8/18	RECONFIGURATION	SBS	BCM
2	1/19/18	REVIEW COMMENTS	SBS	BCM
3	2/2/18	REVIEW COMMENTS	SBS	BCM
4	3/6/18	REVIEW COMMENTS	SBS	BCM
5	4/25/18	REVIEW COMMENTS	SBS	BCM

MCKENZIE ENGINEERING GROUP
Assinippi Office Park
150 Longwater Drive, Suite 101
Norwell, MA 02061
Ph: 781-792-3900
www.mckeng.com

COMPREHENSIVE PERMIT PLAN

KNOWN AS
RIVER STONE
(ASSESSORS MAP 124, LOTS 70-75 & LOT 26)
VIKING LANE & WARD STREET
HINGHAM, MASSACHUSETTS

PROFESSIONAL ENGINEER:
COMMONWEALTH OF MASSACHUSETTS
BRADLEY C. McKENZIE
CIVIL
No. 39917
REGISTERED PROFESSIONAL ENGINEER

APPLICANT:
RIVER STONE, LLC
293R WASHINGTON STREET
NORWELL, MASSACHUSETTS 02061

ZBA PERMIT PLAN

DRAWN BY:	JLS
DESIGNED BY:	- -
CHECKED BY:	- -
APPROVED BY:	- -
DATE:	10/7/2015
SCALE:	
PROJECT NO.:	27-135

DWG. TITLE:
Construction Details
Sheet 3 of 7

DWG. NO: C-6

M:\MEG\2007 PROJECTS\27-135\DWGS\CUT SHEETS\SUBMISSION R6\27-135 DETAILS (R6).DWG

CULTEC RECHARGER® 150XLHD SPECIFICATIONS

GENERAL
CULTEC RECHARGER® 150XLHD CHAMBERS ARE DESIGNED FOR UNDERGROUND STORMWATER MANAGEMENT. THE CHAMBERS MAY BE USED FOR RETENTION, RECHARGING, DETENTION OR CONTROLLING THE FLOW OF ON-SITE STORMWATER RUNOFF.

CHAMBER PARAMETERS
1. THE CHAMBERS WILL BE MANUFACTURED IN THE U.S.A. BY CULTEC, INC. OF BROOKFIELD, CT. (203-775-4416 OR 1-800-428-5832)
2. THE CHAMBER WILL BE VACUUM THERMOFORMED OF BLACK HIGH MOLECULAR WEIGHT HIGH DENSITY POLYETHYLENE (HMWHDPE.)
3. THE CHAMBER WILL BE ARCHED IN SHAPE.
4. THE CHAMBER WILL BE OPEN-BOTTOMED.
5. THE CHAMBER WILL BE JOINED USING AN INTERLOCKING OVERLAPPING RIB METHOD. CONNECTIONS MUST BE FULLY SHOULDERED OVERLAPPING RIBS, HAVING NO SEPARATE COUPLINGS OR SEPARATE END WALLS.
6. THE NOMINAL CHAMBER DIMENSIONS OF THE CULTEC RECHARGER 150XLHD SHALL BE 18.5 INCHES (470 mm) TALL, 33 INCHES (838 mm) WIDE AND 11 FEET (3.35 m) LONG. THE INSTALLED LENGTH OF A JOINED RECHARGER 150XLHD SHALL BE 10.25 FEET (3.12 m).
7. MAXIMUM INLET OPENING ON THE CHAMBER ENDWALL IS 12 INCHES (300 mm).
8. THE CHAMBER WILL HAVE TWO SIDE PORTALS TO ACCEPT CULTEC HVLV® FC-24 FEED CONNECTORS TO CREATE AN INTERNAL MANIFOLD. THE NOMINAL INSIDE DIMENSIONS OF EACH SIDE PORTAL WILL BE 8.5 INCHES (216 mm) HIGH BY 12 INCHES (304 mm) WIDE. MAXIMUM ALLOWABLE OUTER DIAMETER (O.D.) PIPE SIZE IN THE SIDE PORTAL IS 10.25 INCHES (260 mm).
9. THE NOMINAL CHAMBER DIMENSIONS OF THE CULTEC HVLV® FC-24 FEED CONNECTOR SHALL BE 12 INCHES (305 mm) TALL, 16 INCHES (409 mm) WIDE AND 24.2 INCHES (615 mm) LONG.
10. THE NOMINAL STORAGE VOLUME OF THE RECHARGER 150XLHD CHAMBER WILL BE 2.650 FT³ / FT (0.246 m³ / m) - WITHOUT STONE. THE NOMINAL STORAGE VOLUME OF A JOINED RECHARGER 150XLHD SHALL BE 27.16 FT3 / UNIT (0.77 m³ / UNIT) - WITHOUT STONE.
11. THE NOMINAL STORAGE VOLUME OF THE HVLV FC-24 FEED CONNECTOR WILL BE 0.913 FT³ / FT (0.085 m³ / m) - WITHOUT STONE.
12. THE RECHARGER 150XLHD CHAMBER WILL HAVE THIRTY DISCHARGE HOLES BORED INTO THE SIDEWALLS OF THE UNIT'S CORE TO PROMOTE LATERAL CONVEYANCE OF WATER.
13. THE RECHARGER 150XLHD CHAMBER SHALL HAVE 20 CORRUGATIONS.
14. THE ENDWALL OF THE CHAMBER, WHEN PRESENT, WILL BE AN INTEGRAL PART OF THE CONTINUOUSLY FORMED UNIT. SEPARATE END PLATES CANNOT BE USED WITH THIS UNIT.
15. THE RECHARGER 150XLRHD STAND ALONE UNIT MUST BE FORMED AS A WHOLE CHAMBER HAVING TWO FULLY FORMED INTEGRAL ENDWALLS AND HAVING NO SEPARATE END PLATES OR SEPARATE ENDWALLS.
16. THE RECHARGER 150XLSHD STARTER UNIT MUST BE FORMED AS A WHOLE CHAMBER HAVING ONE FULLY FORMED INTEGRAL ENDWALL AND ONE PARTIALLY FORMED INTEGRAL ENDWALL WITH A LOWER TRANSFER OPENING OF 10 INCHES (254 mm) HIGH X 20.5 INCHES (521 mm) WIDE.
17. THE RECHARGER 150XLIHD INTERMEDIATE UNIT MUST BE FORMED AS A WHOLE CHAMBER HAVING ONE FULLY OPEN ENDWALL AND ONE PARTIALLY FORMED INTEGRAL ENDWALL WITH A LOWER TRANSFER OPENING OF 10 INCHES (254 mm) HIGH X 20.5 INCHES (521 mm) WIDE.
18. THE RECHARGER 150XLEHD END UNIT MUST BE FORMED AS A WHOLE CHAMBER HAVING ONE FULLY FORMED INTEGRAL ENDWALL AND ONE FULLY OPEN END WALL AND HAVING NO SEPARATE END PLATES OR END WALLS.
19. THE HVLV® FC-24 FEED CONNECTOR MUST BE FORMED AS A WHOLE CHAMBER HAVING TWO OPEN END WALLS AND HAVING NO SEPARATE END PLATES OR SEPARATE END WALLS. THE UNIT WILL FIT INTO THE SIDE PORTALS OF THE RECHARGER 150XLHD AND ACT AS CROSS FEED CONNECTIONS.
20. CHAMBERS MUST HAVE HORIZONTAL STIFFENING FLEX REDUCTION STEPS BETWEEN THE RIBS.
21. HEAVY DUTY UNITS ARE DESIGNATED BY A COLORED STRIPE FORMED INTO THE PART ALONG THE LENGTH OF THE CHAMBER.
22. THE CHAMBER WILL HAVE A RAISED INTEGRAL CAP AT THE TOP OF THE ARCH IN THE CENTER OF EACH UNIT TO BE USED AS AN OPTIONAL INSPECTION PORT OR CLEAN-OUT.
23. THE UNITS MAY BE TRIMMED TO CUSTOM LENGTHS BY CUTTING BACK TO ANY CORRUGATION.
24. THE CHAMBER SHALL BE MANUFACTURED IN AN ISO 9001:2008 CERTIFIED FACILITY.
25. THE CHAMBER WILL BE DESIGNED TO WITHSTAND TRAFFIC LOADS WHEN INSTALLED ACCORDING TO CULTEC'S RECOMMENDED INSTALLATION INSTRUCTIONS.
26. MAXIMUM ALLOWED COVER OVER TOP OF UNIT SHALL BE 12 FEET (3.65 m).

CULTEC HVLV® FC-24 FEED CONNECTOR PRODUCT SPECIFICATIONS

GENERAL
CULTEC HVLV FC-24 FEED CONNECTORS ARE DESIGNED TO CREATE AN INTERNAL MANIFOLD FOR CULTEC RECHARGER 150XLHD STORMWATER CHAMBERS.

CHAMBER PARAMETERS
1. THE CHAMBERS WILL BE MANUFACTURED BY CULTEC, INC. OF BROOKFIELD, CT. (203-775-4416 OR 1-800-428-5832)
2. THE CHAMBER WILL BE VACUUM THERMOFORMED OF BLACK HIGH MOLECULAR WEIGHT HIGH DENSITY POLYETHYLENE (HMWHDPE).
3. THE CHAMBER WILL BE ARCHED IN SHAPE.
4. THE CHAMBER WILL BE OPEN-BOTTOMED.
5. THE NOMINAL CHAMBER DIMENSIONS OF THE CULTEC HVLV FC-24 FEED CONNECTOR SHALL BE 12 INCHES (305 MM) TALL, 16 INCHES (409 mm) WIDE AND 24.2 INCHES (614 mm) LONG.
6. THE NOMINAL STORAGE VOLUME OF THE HVLV FC-24 FEED CONNECTOR WILL BE 0.913 FT3 / FT (0.085 m³ / m) - WITHOUT STONE.
7. THE HVLV FC-24 FEED CONNECTOR CHAMBER SHALL HAVE 2 CORRUGATIONS.
8. THE HVLV FC-24 FEED CONNECTOR MUST BE FORMED AS A WHOLE CHAMBER HAVING TWO OPEN END WALLS AND HAVING NO SEPARATE END PLATES OR SEPARATE END WALLS. THE UNIT WILL FIT INTO THE SIDE PORTALS OF THE CULTEC RECHARGER STORMWATER CHAMBER AND ACT AS CROSS FEED CONNECTIONS CREATING AN INTERNAL MANIFOLD.
9. THE CHAMBER WILL BE DESIGNED TO WITHSTAND TRAFFIC LOADS WHEN INSTALLED ACCORDING TO CULTEC'S RECOMMENDED INSTALLATION INSTRUCTIONS.
10. THE CHAMBER SHALL BE MANUFACTURED IN AN ISO 9001:2008 CERTIFIED FACILITY.

CULTEC NO. 66™ WOVEN GEOTEXTILE

GENERAL
CULTEC NO. 66™ WOVEN GEOTEXTILE IS UTILIZED AS AN UNDERLAYMENT TO PREVENT SCOURING CAUSED BY WATER MOVEMENT WITHIN THE CULTEC CHAMBERS AND FEED CONNECTORS UTILIZING THE CULTEC MANIFOLD FEATURE.

GEOTEXTILE PARAMETERS
1. THE GEOTEXTILE SHALL BE PROVIDED BY CULTEC, INC. OF BROOKFIELD, CT. (203-775-4416 OR 1-800-428-5832)
2. THE GEOTEXTILE SHALL BE BLACK IN APPEARANCE.
3. THE GEOTEXTILE SHALL HAVE A TENSILE STRENGTH OF 315 LBS (1.40KN) PER ASTM D4632 TESTING METHOD.
4. THE GEOTEXTILE SHALL HAVE A TENSILE ELONGATION RESISTANCE OF 15% PER ASTM D4632 TESTING METHOD.
5. THE GEOTEXTILE SHALL HAVE A MULLEN BURST RESISTANCE OF 600PSI (4136 KPA) PER ASTM D3786 TESTING METHOD.
6. THE GEOTEXTILE SHALL HAVE A TEAR RESISTANCE OF 115 LBS (0.51 KN) PER ASTM D4533 TESTING METHOD.
7. THE GEOTEXTILE SHALL HAVE A PUNCTURE RESISTANCE OF 150 LBS (0.66 KN) PER ASTM D4833 TESTING METHOD.
8. THE GEOTEXTILE SHALL HAVE A CBR PUNCTURE RESISTANCE OF 900 LBS (4.00 KN) PER ASTM D6241 TESTING METHOD.
9. THE GEOTEXTILE SHALL HAVE A UV RESISTANCE OF 70% @ 500 HRS. PER ASTM D4355 TESTING METHOD.
10. THE GEOTEXTILE SHALL HAVE A PERMITTIVITY RATING OF 0.05 SEC-1 PER ASTM D4491 TESTING METHOD.
11. THE GEOTEXTILE SHALL HAVE A WATER FLOW RATING OF 4 GPM/FT2 (160 LPM/M2) PER ASTM D4491 TESTING METHOD.
12. THE GEOTEXTILE SHALL HAVE A PERCENT OPEN AREA OF <1% PER CW-02215 TESTING METHOD.
13. THE GEOTEXTILE SHALL HAVE AN APPARENT OPENING SIZE OF 40 US STD. SIEVE (0.425 MM) PER ASTM D4751 TESTING METHOD.
14. THE GEOTEXTILE SHALL CONSIST OF A 100% HIGH-TENACITY, SILT-FILM POLYPROPYLENE YARNS.

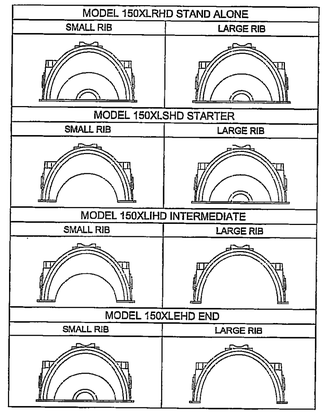

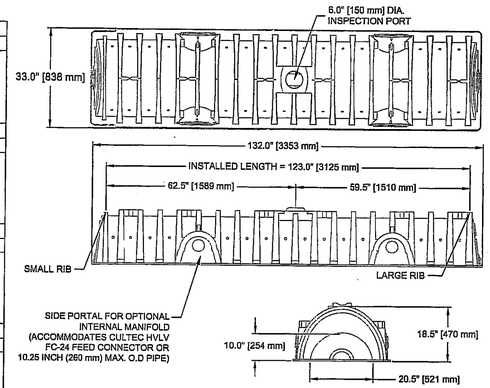

CULTEC RECHARGER 150XLHD CHAMBER STORAGE = 2.65 CF/FT [0.245 m³/m]
INSTALLED LENGTH ADJUSTMENT = 0.75' [0.23 m]
ALL RECHARGER 150XLHD HEAVY-DUTY UNITS ARE MARKED WITH A COLORED STRIPE FORMED INTO THE PART ALONG THE LENGTH OF THE CHAMBER.
SIDE PORTAL ACCEPTS CULTEC HVLV FC-24 FEED CONNECTOR.

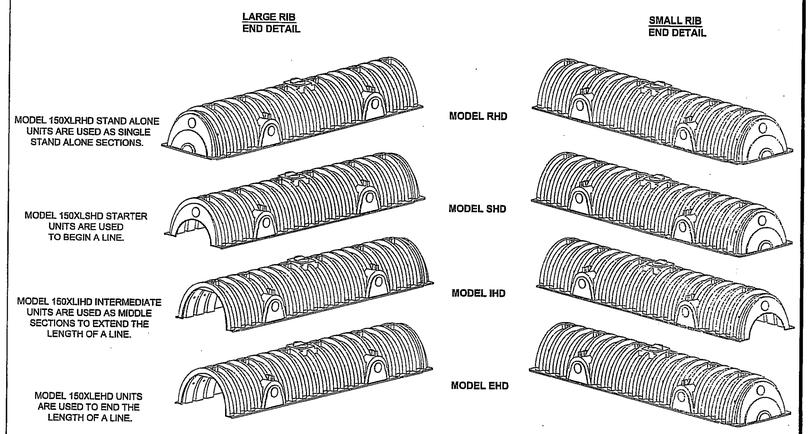

150XLHD 1.0

GENERAL NOTES

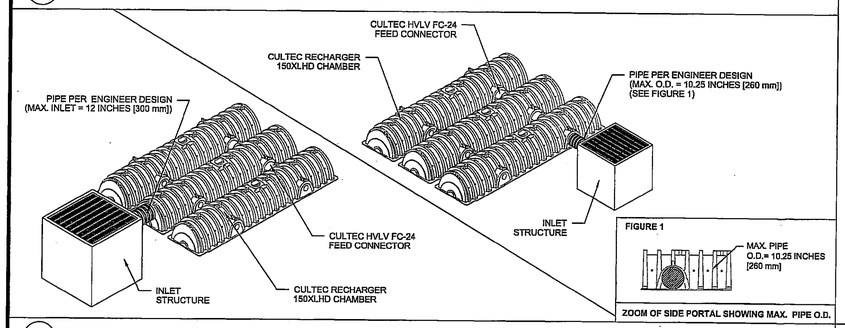

150XLHD 2.0

CULTEC RECHARGER 150XLHD HEAVY DUTY THREE VIEW

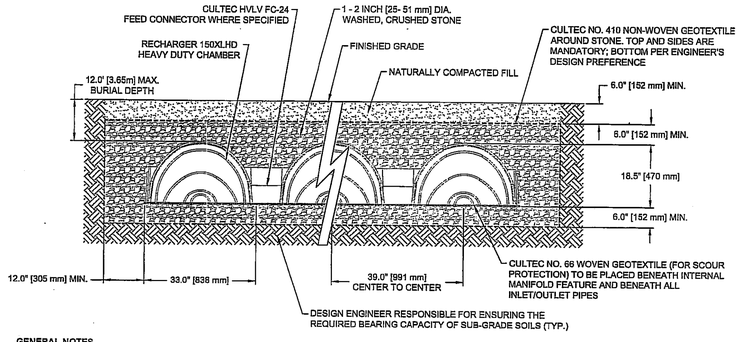

GENERAL NOTES
RECHARGER 150XLHD BY CULTEC, INC. OF BROOKFIELD, CT.
STORAGE PROVIDED = 4.89 CF/FT (0.45 m³/m) PER DESIGN UNIT.
REFER TO CULTEC, INC.'S CURRENT RECOMMENDED INSTALLATION GUIDELINES.
MAXIMUM ALLOWED COVER OVER TOP OF UNIT SHALL BE 12 '(3.65m).
THE CHAMBER WILL BE DESIGNED TO WITHSTAND TRAFFIC LOADS WHEN INSTALLED ACCORDING TO CULTEC'S RECOMMENDED INSTALLATION INSTRUCTIONS.

ALL RECHARGER 150XLHD HEAVY DUTY UNITS ARE MARKED WITH A COLORED STRIPE FORMED INTO THE PART ALONG THE LENGTH OF THE CHAMBER.
ALL RECHARGER 150XLHD CHAMBERS MUST BE INSTALLED IN ACCORDANCE WITH ALL APPLICABLE LOCAL, STATE AND FEDERAL REGULATIONS.

150XLHD 3.0

CULTEC RECHARGER 150XLHD HEAVY DUTY END DETAIL INFORMATION

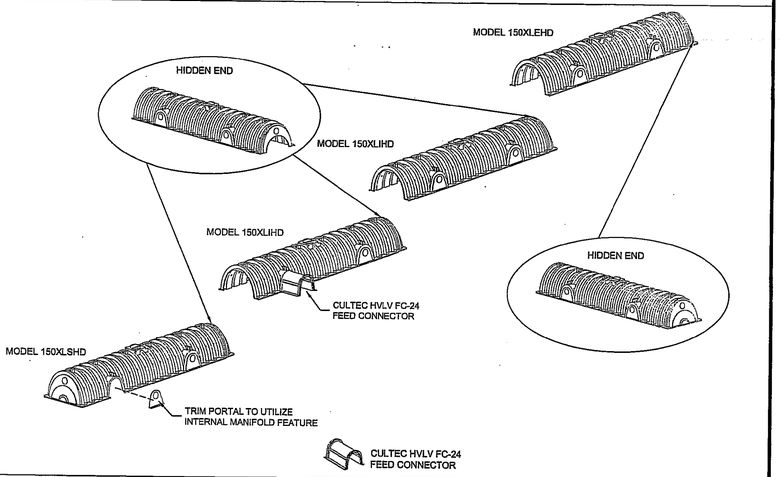

150XLHD 4.0

CULTEC TYPICAL INLET CONNECTION

150XLHD 5.0

CULTEC RECHARGER 150XLHD HEAVY DUTY TYPICAL CROSS SECTION

150XLHD 6.0

CULTEC RECHARGER 150XLHD HEAVY DUTY TYPICAL INTERLOCK

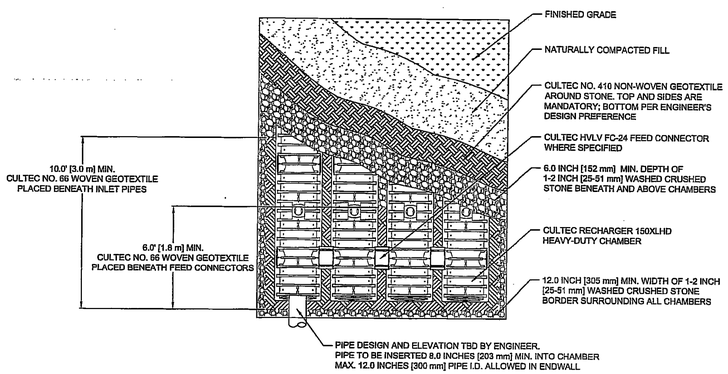

150XLHD 7.0

CULTEC RECHARGER 150XLHD HEAVY DUTY PLAN VIEW

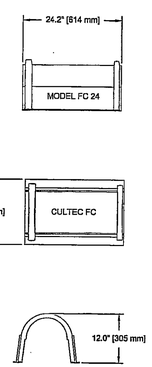

150XLHD 8.0

CULTEC HVLV FC-24 FEED CONNECTOR THREE VIEW

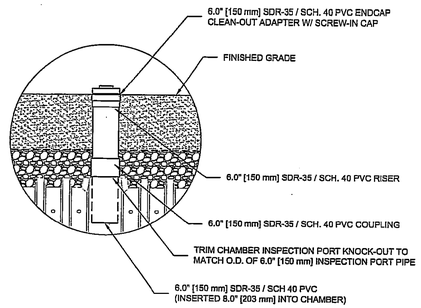

150XLHD 9.0

OPTIONAL INSPECTION PORT - ZOOM DETAIL

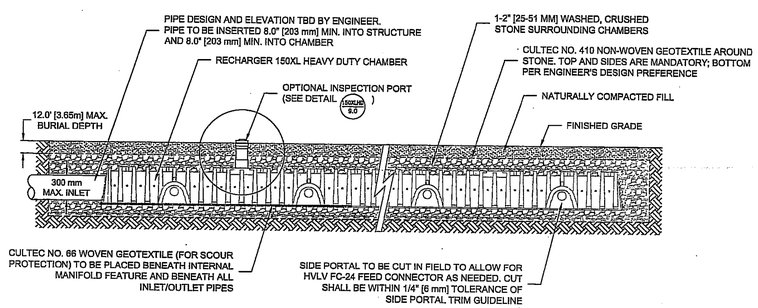

150XLHD 10.0

CULTEC INTERNAL MANIFOLD - OPTIONAL INSPECTION PORT DETAIL

CULTEC™
CULTEC, Inc.
Subsurface Stormwater Management Systems
P.O. Box 280
878 Federal Road
Brookfield, CT 06804
www.cultec.com
PH: (203) 775-4416
PH: (800) 4-CULTEC
FX: (203) 775-1462
tech@cultec.com

THIS DRAWING WAS PREPARED TO SUPPORT THE DESIGN ENGINEER FOR THE PROPOSED SYSTEM. IT IS THE ULTIMATE RESPONSIBILITY OF THE DESIGN ENGINEER TO ASSURE THAT THE STORMWATER SYSTEM'S DESIGN IS IN FULL COMPLIANCE WITH ALL APPLICABLE LAWS AND REGULATIONS. IT IS THE DESIGN ENGINEER'S RESPONSIBILITY TO ENSURE THAT THE CULTEC PRODUCTS ARE DESIGNED IN ACCORDANCE WITH CULTEC'S MINIMUM REQUIREMENTS. CULTEC INC. DOES NOT APPROVE PLANS, SIZING, OR SYSTEM DESIGNS. THE DESIGNING ENGINEER IS RESPONSIBLE FOR ALL DESIGN DECISIONS.

RECHARGER 150XLHD
DETAIL SHEET
NON-TRAFFIC APPLICATION

CULTEC RECHARGER® 150XLHD	
PROJECT NO:	DATE: 02/2016
DESIGNED BY: CULTEC, INC	DRAWN BY: TECH
SCALE: N.T.S.	SHEET NO: C-7

CULTEC RECHARGER® 330XLHD PRODUCT SPECIFICATIONS

GENERAL
CULTEC RECHARGER 330XLHD CHAMBERS ARE DESIGNED FOR UNDERGROUND STORMWATER MANAGEMENT. THE CHAMBERS MAY BE USED FOR RETENTION, RECHARGING, DETENTION OR CONTROLLING THE FLOW OF ON-SITE STORMWATER RUNOFF.

CHAMBER PARAMETERS
1. THE CHAMBERS WILL BE MANUFACTURED IN THE U.S.A. BY CULTEC, INC. OF BROOKFIELD, CT (203-775-4416 OR 1-800-428-5832).
2. THE CHAMBER WILL BE VACUUM THERMOFORMED OF BLACK POLYETHYLENE.
3. THE CHAMBER WILL BE ARCHED IN SHAPE.
4. THE CHAMBER WILL BE OPEN-BOTTOMED.
5. THE CHAMBER WILL BE JOINED USING AN INTERLOCKING OVERLAPPING RIB METHOD. CONNECTIONS MUST BE FULLY SHOULDERED OVERLAPPING RIBS, HAVING NO SEPARATE COUPLINGS OR SEPARATE END WALLS
6. THE NOMINAL CHAMBER DIMENSIONS OF THE CULTEC RECHARGER 330XLHD SHALL BE 30.5 INCHES (775 mm) TALL, 52 INCHES (1321 mm) WIDE AND 8.5 FEET (2.59 m) LONG. THE INSTALLED LENGTH OF A JOINED RECHARGER 330XLHD SHALL BE 7 FEET (2.13 m).
7. MAXIMUM INLET OPENING ON THE CHAMBER END WALL IS 24 INCHES (610 mm).
8. THE CHAMBER WILL HAVE TWO SIDE PORTALS TO ACCEPT CULTEC HVLV® FC-24 FEED CONNECTORS TO CREATE AN INTERNAL MANIFOLD. THE NOMINAL DIMENSIONS OF EACH SIDE PORTAL WILL BE 10.9 INCHES (287 mm) HIGH BY 11.5 INCHES (292 mm) WIDE. MAXIMUM ALLOWABLE OUTER DIAMETER (O.D.) PIPE SIZE IN THE SIDE PORTAL IS 11.75 INCHES (298 mm).
9. THE NOMINAL CHAMBER DIMENSIONS OF THE CULTEC HVLV FC-24 FEED CONNECTOR SHALL BE 12 INCHES (305 mm) TALL, 16 INCHES (406 mm) WIDE AND 24.2 INCHES (614 mm) LONG.
10. THE NOMINAL STORAGE VOLUME OF THE RECHARGER 330XLHD CHAMBER WILL BE 7.459 FT³ / FT (0.693 m³ / m) - WITHOUT STONE. THE NOMINAL STORAGE VOLUME OF A JOINED RECHARGER 330XLHD SHALL BE 52.213 FT³ / UNIT (1.478 m³ / UNIT) - WITHOUT STONE.
11. THE NOMINAL STORAGE VOLUME OF THE HVLV FC-24 FEED CONNECTOR WILL BE 0.913 FT³ / FT (0.085 m³ / m) - WITHOUT STONE.
12. THE RECHARGER 330XLHD CHAMBER WILL HAVE FIFTY-SIX DISCHARGE HOLES BORED INTO THE SIDEWALLS OF THE UNIT'S CORE TO PROMOTE LATERAL CONVEYANCE OF WATER.
13. THE RECHARGER 330XLHD CHAMBER SHALL HAVE 16 CORRUGATIONS.
14. THE END WALL OF THE CHAMBER, WHEN PRESENT, WILL BE AN INTEGRAL PART OF THE CONTINUOUSLY FORMED UNIT. SEPARATE END PLATES CANNOT BE USED WITH THIS UNIT.
15. THE RECHARGER 330XLHD STAND ALONE UNIT MUST BE FORMED AS A WHOLE CHAMBER HAVING TWO FULLY FORMED INTEGRAL END WALLS AND HAVING NO SEPARATE END PLATES OR SEPARATE END WALLS.
16. THE RECHARGER 330XLHD STARTER UNIT MUST BE FORMED AS A WHOLE CHAMBER HAVING ONE FULLY FORMED INTEGRAL END WALL AND ONE PARTIALLY FORMED INTEGRAL END WALL WITH A LOWER TRANSFER OPENING OF 14 INCHES (356 mm) HIGH X 34.5 INCHES (876 mm) WIDE.
17. THE RECHARGER 330XLHD INTERMEDIATE UNIT MUST BE FORMED AS A WHOLE CHAMBER HAVING ONE FULLY OPEN ENDWALL AND ONE PARTIALLY FORMED INTEGRAL END WALL WITH A LOWER TRANSFER OPENING OF 14 INCHES (356 mm) HIGH X 34.5 INCHES (876 mm) WIDE.
18. THE RECHARGER 330XLHD END UNIT MUST BE FORMED AS A WHOLE CHAMBER HAVING ONE FULLY FORMED INTEGRAL END WALL AND ONE FULLY OPEN END WALL AND HAVING NO SEPARATE END PLATES OR END WALLS.
19. THE HVLV FC-24 FEED CONNECTOR MUST BE FORMED AS A WHOLE CHAMBER HAVING TWO OPEN END WALLS AND HAVING NO SEPARATE END PLATES OR SEPARATE END WALLS. THIS UNIT WILL FIT INTO THE SIDE PORTALS OF THE RECHARGER 330XLHD AND ACT AS CROSS FEED CONNECTIONS.
20. CHAMBERS MUST HAVE HORIZONTAL STIFFENING FLEX REDUCTION STEPS BETWEEN THE RIBS.
21. HEAVY DUTY UNITS ARE DESIGNATED BY A COLORED STRIPE FORMED INTO THE PART ALONG THE LENGTH OF THE CHAMBER.
22. THE CHAMBER WILL HAVE A 6 INCH (152 mm) DIAMETER RAISED INTEGRAL CAP LOCATED ON TOP OF THE ARCH IN THE CENTER OF EACH UNIT TO BE USED AS AN OPTIONAL INSPECTION PORT OR CLEAN-OUT.
23. THE UNITS MAY BE TRIMMED TO CUSTOM LENGTHS BY CUTTING BACK TO ANY CORRUGATION.
24. THE CHAMBER SHALL BE MANUFACTURED IN AN ISO 9001:2008 CERTIFIED FACILITY.
25. MAXIMUM ALLOWED COVER OVER TOP OF UNIT SHALL BE 12 FEET (3.66 m)
26. THE CHAMBER WILL BE DESIGNED TO WITHSTAND TRAFFIC LOADS WHEN INSTALLED ACCORDING TO CULTEC'S RECOMMENDED INSTALLATION INSTRUCTIONS.

CULTEC HVLV FC-24 FEED CONNECTOR PRODUCT SPECIFICATIONS
GENERAL
CULTEC HVLV FC-24 FEED CONNECTORS ARE DESIGNED TO CREATE AN INTERNAL MANIFOLD FOR CULTEC RECHARGER MODEL 330XLHD STORMWATER CHAMBERS.

CHAMBER PARAMETERS
1. THE CHAMBERS WILL BE MANUFACTURED BY CULTEC, INC. OF BROOKFIELD, CT. (203-775-4416 OR 1-800-428-5832)
2. THE CHAMBER WILL BE VACUUM THERMOFORMED OF BLACK HIGH MOLECULAR WEIGHT HIGH DENSITY POLYETHYLENE (HMWHDPE).
3. THE CHAMBER WILL BE ARCHED IN SHAPE.
4. THE CHAMBER WILL BE OPEN-BOTTOMED.
5. THE NOMINAL CHAMBER DIMENSIONS OF THE CULTEC HVLV FC-24 FEED CONNECTOR SHALL BE 12 INCHES (305 mm) TALL, 16 INCHES (406 mm) WIDE AND 24.2 INCHES (614 mm) LONG.
6. THE NOMINAL STORAGE VOLUME OF THE HVLV FC-24 FEED CONNECTOR WILL BE 0.913 FT³ / FT (0.085 m³ / m) - WITHOUT STONE.
7. THE HVLV FC-24 FEED CONNECTOR CHAMBER SHALL HAVE 2 CORRUGATIONS.
8. THE HVLV FC-24 FEED CONNECTOR MUST BE FORMED AS A WHOLE CHAMBER HAVING TWO OPEN END WALLS AND HAVING NO SEPARATE END PLATES OR SEPARATE END WALLS. THE UNIT WILL FIT INTO THE SIDE PORTALS OF THE CULTEC RECHARGER STORMWATER CHAMBER AND ACT AS CROSS FEED CONNECTIONS CREATING AN INTERNAL MANIFOLD.
9. THE CHAMBER WILL BE DESIGNED TO WITHSTAND TRAFFIC LOADS WHEN INSTALLED ACCORDING TO CULTEC'S RECOMMENDED INSTALLATION INSTRUCTIONS.
10. THE CHAMBER SHALL BE MANUFACTURED IN AN ISO 9001:2008 CERTIFIED FACILITY.

CULTEC NO. 66™ WOVEN GEOTEXTILE

GENERAL
CULTEC NO. 66™ WOVEN GEOTEXTILE IS UTILIZED AS AN UNDERLAYMENT TO PREVENT SCOURING CAUSED BY WATER MOVEMENT WITHIN THE CULTEC CHAMBERS AND FEED CONNECTORS UTILIZING THE CULTEC MANIFOLD FEATURE.

GEOTEXTILE PARAMETERS
1. THE GEOTEXTILE SHALL BE PROVIDED BY CULTEC, INC. OF BROOKFIELD, CT. (203-775-4416 OR 1-800-428-5832)
2. THE GEOTEXTILE SHALL BE BLACK IN APPEARANCE.
3. THE GEOTEXTILE SHALL HAVE A TENSILE STRENGTH OF 316 LBS (1.40KN) PER ASTM D4632 TESTING METHOD.
4. THE GEOTEXTILE SHALL HAVE A TENSILE ELONGATION RESISTANCE OF 15% PER ASTM D4632 TESTING METHOD.
5. THE GEOTEXTILE SHALL HAVE A MULLEN BURST RESISTANCE OF 600PSI (4138 KPA) PER ASTM D3786 TESTING METHOD.
6. THE GEOTEXTILE SHALL HAVE A TEAR RESISTANCE OF 115 LBS (0.51 KN) PER ASTM D4533 TESTING METHOD.
7. THE GEOTEXTILE SHALL HAVE A PUNCTURE RESISTANCE OF 130 LBS (0.66 KN) PER ASTM D4833 TESTING METHOD.
8. THE GEOTEXTILE SHALL HAVE A CBR PUNCTURE RESISTANCE OF 500 LBS (4.00 KN) PER ASTM D6241 TESTING METHOD.
9. THE GEOTEXTILE SHALL HAVE A UV RESISTANCE OF 70% @ 500 HRS. PER ASTM D4355 TESTING METHOD.
10. THE GEOTEXTILE SHALL HAVE A PERMITTIVITY RATING OF 0.05 SEC-1 PER ASTM D4491 TESTING METHOD.
11. THE GEOTEXTILE SHALL HAVE A WATER FLOW RATING OF 4 GPM/FT2 (160 LPM/M2) PER ASTM D4491 TESTING METHOD.
12. THE GEOTEXTILE SHALL HAVE A PERCENT OPEN AREA OF <1% PER CW-02215 TESTING METHOD.
13. THE GEOTEXTILE SHALL HAVE AN APPARENT OPENING SIZE OF 40 US STD. SIEVE (0.425 MM) PER ASTM D4751 TESTING METHOD.
14. THE GEOTEXTILE SHALL CONSIST OF A 100% HIGH-TENACITY, SILT-FILM POLYPROPYLENE YARNS.

330XLHD 1.0

GENERAL NOTES

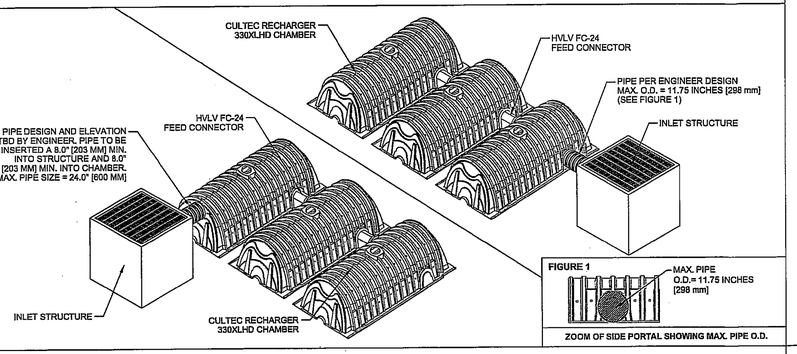

330XLHD 4.0

CULTEC TYPICAL INLET CONNECTION

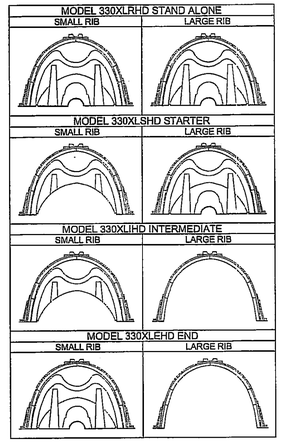

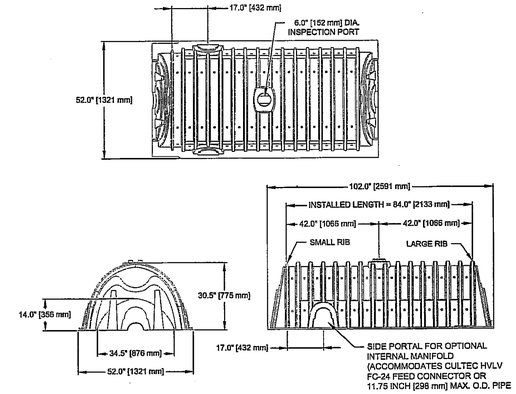

CULTEC RECHARGER 330XLHD CHAMBER STORAGE = 7.459 CF/FT [0.693 m³/m]
INSTALLED LENGTH ADJUSTMENT = 1.5' [0.46 m]
SIDE PORTAL ACCEPTS CULTEC HVLV FC-24 FEED CONNECTOR

330XLHD 2.0

CULTEC RECHARGER 330XLHD HEAVY DUTY THREE VIEW

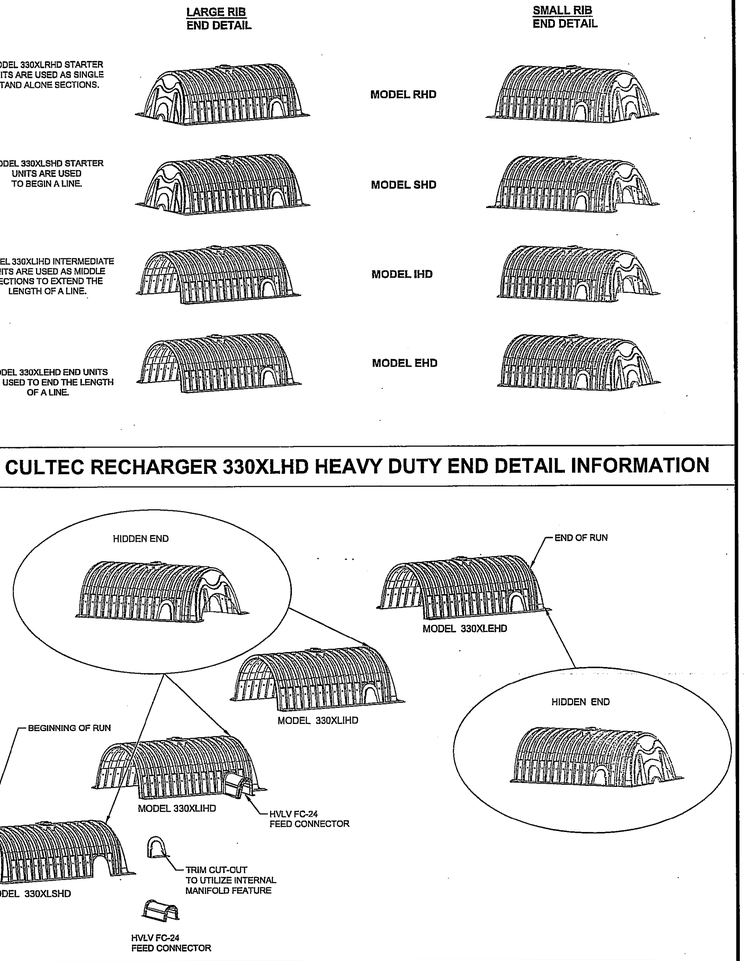

330XLHD 3.0

CULTEC RECHARGER 330XLHD HEAVY DUTY END DETAIL INFORMATION

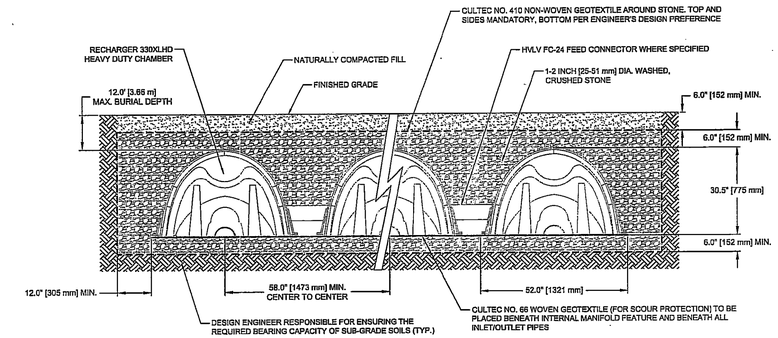

GENERAL NOTES
RECHARGER 330XL HD BY CULTEC, INC. OF BROOKFIELD, CT.
STORAGE PROVIDED = 11.32 CF/FT [1.05 m³/m] PER DESIGN UNIT.
REFER TO CULTEC, INC.'S CURRENT RECOMMENDED INSTALLATION GUIDELINES.
THE CHAMBER WILL BE DESIGNED TO WITHSTAND TRAFFIC LOADS WHEN INSTALLED ACCORDING TO CULTEC'S RECOMMENDED INSTALLATION INSTRUCTIONS

ALL RECHARGER 330XL HD HEAVY DUTY UNITS ARE MARKED WITH A COLOR STRIPE FORMED INTO THE PART ALONG THE LENGTH OF THE CHAMBER.
ALL RECHARGER 330XL HD CHAMBERS MUST BE INSTALLED IN ACCORDANCE WITH ALL APPLICABLE LOCAL, STATE AND FEDERAL REGULATIONS

330XLHD 5.0

CULTEC RECHARGER 330XLHD HEAVY DUTY TYPICAL CROSS SECTION

330XLHD 6.0

CULTEC RECHARGER 330XLHD HEAVY DUTY TYPICAL INTERLOCK

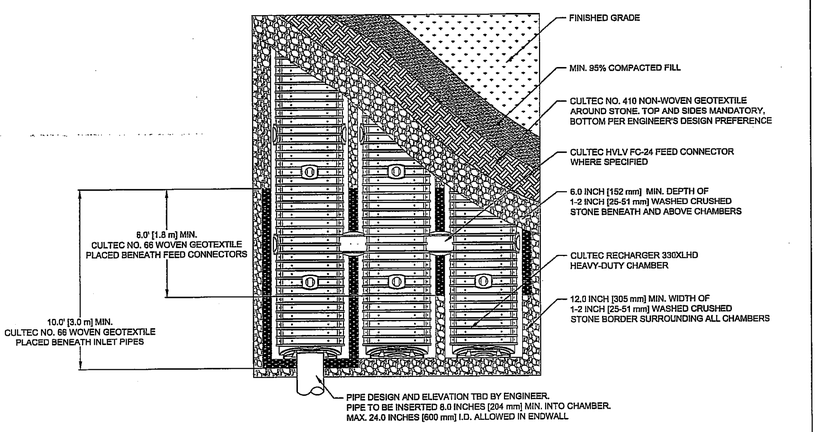

330XLHD 7.0

CULTEC RECHARGER 330XLHD HEAVY DUTY PLAN VIEW

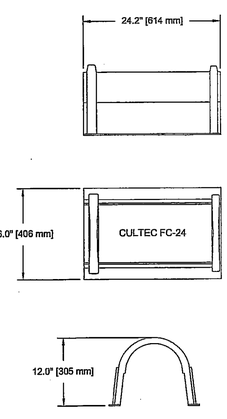

330XLHD 8.0

CULTEC HVLV FC-24 FEED CONNECTOR THREE VIEW

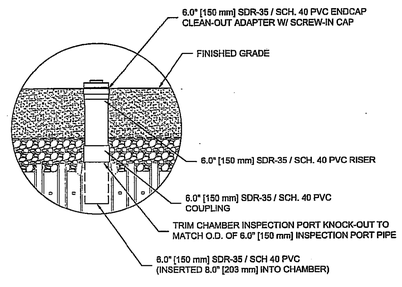

330XLHD 9.0

OPTIONAL INSPECTION PORT- ZOOM DETAIL

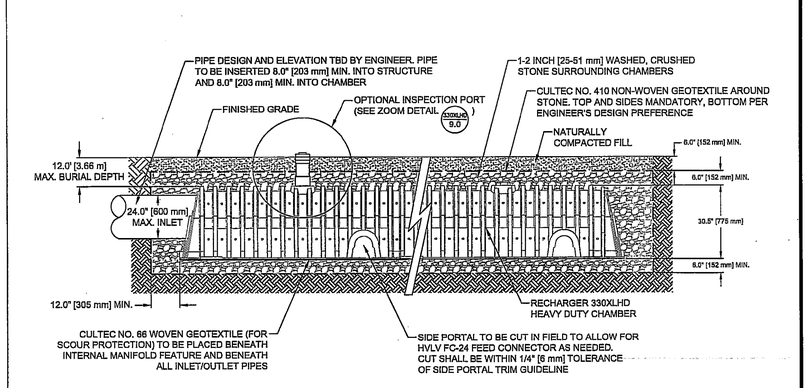

330XLHD 10.0

CULTEC INTERNAL MANIFOLD- OPTIONAL INSPECTION PORT DETAIL

CULTEC, Inc.
Subsurface Stormwater Management Systems
P.O. Box 280
878 Federal Road
Brookfield, CT 06804
www.cultec.com
PH: (203) 775-4416
PH: (800) 4-CULTEC
FX: (203) 775-1462
tech@cultec.com

THIS DRAWING WAS PREPARED TO SUPPORT THE DESIGN ENGINEER FOR THE PROPOSED SYSTEM. IT IS THE ULTIMATE RESPONSIBILITY OF THE DESIGN ENGINEER TO ASSURE THAT THE STORMWATER SYSTEM'S DESIGN IS IN FULL COMPLIANCE WITH ALL APPLICABLE LAWS AND REGULATIONS. IT IS THE DESIGN ENGINEER'S RESPONSIBILITY TO ENSURE THAT THE CULTEC PRODUCTS ARE DESIGNED IN ACCORDANCE WITH CULTEC'S MINIMUM REQUIREMENTS. CULTEC INC. DOES NOT APPROVE PLANS, SIZING, OR SYSTEM DESIGNS. THE DESIGNING ENGINEER IS RESPONSIBLE FOR ALL DESIGN DECISIONS.

RECHARGER 330XLHD
DETAIL SHEET
NON- TRAFFIC APPLICATION

CULTEC RECHARGER® 330XLHD

PROJECT NO:	-	DATE:	02/2016
DESIGNED BY:	CULTEC, INC	DRAWN BY:	TECH
SCALE:	N.T.S.	SHEET NO:	C-8

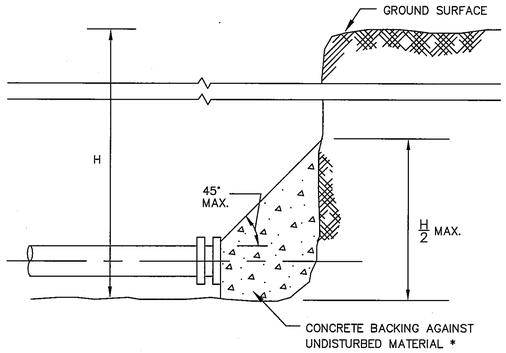

TYPICAL WATER MAIN PLUG

NOT TO SCALE

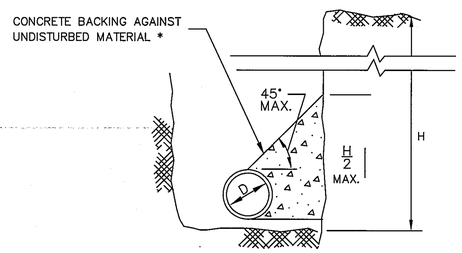

TYPICAL WATER MAIN THRUST BLOCK SECTION DETAILS

NOT TO SCALE

MAXIMUM SIZE TAPPED CONNECTION *

WATER MAIN DIAMETER	MAXIMUM TAP DIAMETER
4"	1/2"
6"	3/4"
8"	3/4"
12"	1"

* WHERE THE SIZE OF THE CONNECTION EXCEEDS THAT GIVEN IN THE TABLE A BOSS SHALL BE PROVIDED OR THE TAP SHALL BE MADE BY MEANS OF MUTIPLE CORP. STOPS AND BRANCH FITTINGS, TAPPED TEE, OR TAPPED SADDLE.

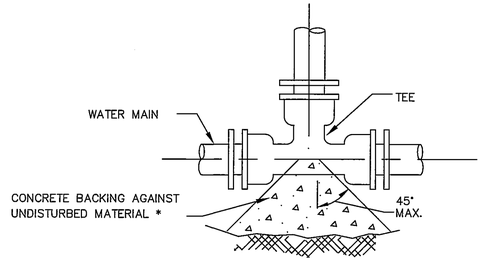

* SEE TABLE ON THRUST BLOCK BEARING AREAS FOR THE AREA OF CONCRETE REQUIRED.

TYPICAL WATER MAIN TEE THRUST BLOCK DETAILS

NOT TO SCALE

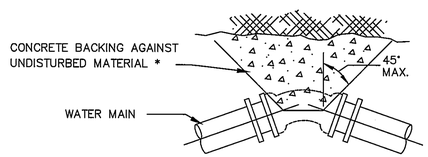

* SEE TABLE ON THRUST BLOCK BEARING AREAS FOR THE AREA OF CONCRETE REQUIRED.

TYPICAL WATER MAIN BEND THRUST BLOCK DETAILS

NOT TO SCALE

THRUST BLOCK BEARING AREAS FOR WATER PIPE

TABLE OF BEARING AREAS IN SQ. FT. AGAINST UNDISTURBED MATERIAL FOR WATER MAIN FITTINGS*

SIZE OF MAIN (IN.)	90° BEND	TEES AND PLUGS	45° BEND
6	4	2.5	2
8	6	4	3
12	12	9	7
16	21	16	12

* TYPE OF SOIL IS MEDIUM CLAYEY, 6 OR MORE BLOWS PER FOOT, OR LOOSE GRANULAR, 9 OR MORE BLOWS PER FOOT. SOIL CONDITIONS OTHER THAN THOSE GIVEN WILL REQUIRE LARGER BEARING AREAS.

NOTES:

1. FOR FITTINGS WITH LESS THAN 45 DEFLECTION, USE BEARING AREAS FOR 45 BEND.
2. BEARING AREAS BASED ON HORIZONTAL PASSIVE SOIL PRESSURE OF 2000 P.S.F. AND INTERNAL WATER PRESSURE OF 150 P.S.I.G. JOINTS SHALL NOT BE ENCASED IN CONCRETE. BEARING AREAS MAY BE DIREGARDED FOR TRENCHES IN ROCK WHERE THE TOP OF THE ROCK FACE IS AT OR ABOVE THE CROWN OF THE PIPE. HOWEVER, CONCRETE BACKING SHALL BE PLACED BETWEEN THE PIPE AND THE ROCK FACE.
3. THE CONTRACTOR SHALL SUBMIT 2 WEEKS IN ADVANCE OF PLACEMENT, WORKING DRAWINGS FOR EACH THRUST BLOCK TO THE ENGINEER FOR APPROVAL PRIOR TO INSTALLATION.
4. ALL TEES, GATE VALVES, HYDRANTS AND FITTINGS SHALL BE MECHANICAL JOINTS WITH MEGA-LUGS.
5. THRUST BLOCKS SHALL BE BARREL BLOCKS.

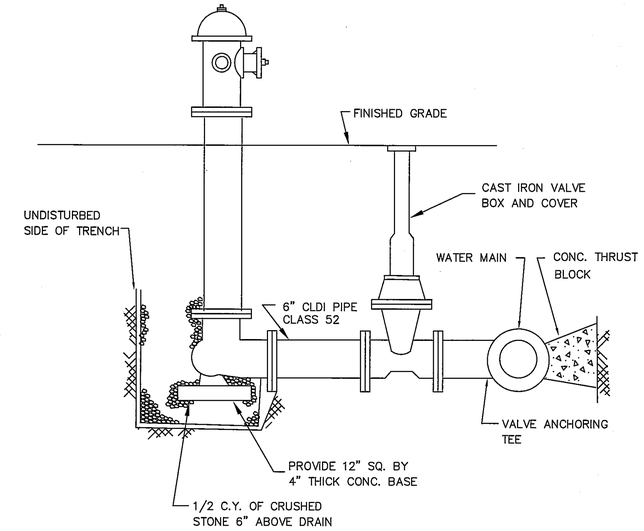

HYDRANT DETAIL

NOT TO SCALE

NOTE:
WHERE NO PAVED SIDEWALK EXIST CURB STOPS & VALVE BOXES TO BE INSTALLED IN STREET

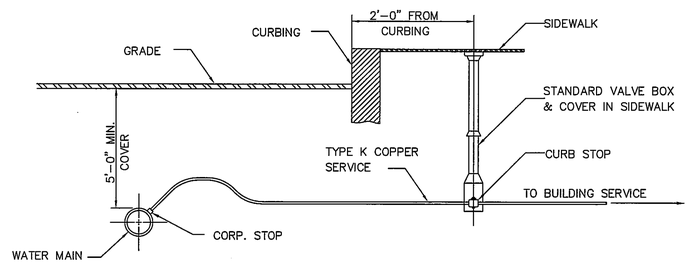

COPPER SERVICE CONNECTION

N.T.S.

GENERAL NOTES

ALL WATER MAIN MATERIALS AND INSTALLATION SHALL BE IN ACCORDANCE WITH THE AQUARION WATER COMPANY RULES AND REGULATIONS.

1. IF SHEETING IS USED, IT SHALL BE CUT OFF NO MORE THAN 12" ABOVE TOP OF PIPE.
2. ALL PIPES SHALL BE PRESSURE TESTED AT 200 PSI WORKING PRESSURE FOR A MINIMUM DURATION OF TWO HOUR.
3. WATER SYSTEM IS TO BE DISINFECTED TO 50 P.P.M. AVAILABLE CHLORINE AND AFTER 24 HOURS TO 25 P.P.M. OR AS REQUIRED BY THE AQUARION WATER COMPANY.
4. WATER PIPE IS TO BE CEMENT LINED DUCTILE IRON "TYTON" OR EQUAL TYPE JOINT, CONFORMING TO A.N.S.I./A.W.W.A. C150/A21.50, CLASS 52, AS APPROVED BY THE AQUARION WATER COMPANY.
5. ALL PIPING SHALL BE INSTALLED AND TESTED IN ACCORDANCE WITH A.W.W.A. STANDARDS PRIOR TO PAVING IF PAVING ABOVE TRENCH IS REQUIRED.
6. BACKFILL IS TO BE COMPACTED TO 90% MAXIMUM DRY DENSITY BY AASHTO T-180 D.
7. ALL WATER PIPE SHALL BE LAID WITH A MINIMUM OF 5 FEET OF COVER OF APPROVED MATERIALS.
8. ALL HYDRANT LOCATIONS ARE TO BE APPROVED BY FIRE DEPARTMENT.
9. RESULTS FROM PRESSURE TESTING AND DISINFECTION SHALL BE FURNISHED TO THE DIRECTOR OF PUBLIC WORKS FOR APPROVAL PRIOR TO WATER BEING TURNED ON
10. ALL WORK SHALL BE IN CONFORMANCE WITH THE AQUARION WATER COMPANY STANDARDS.
11. ALL PERMITS REQUIRED FOR STREET OPENINGS AND WATER MAIN TAPPING MUST BE OBTAINED.
12. NO WATER WILL BE TURNED ON IN THE PROJECT WITHOUT AQUARION WATER COMPANY APPROVAL.

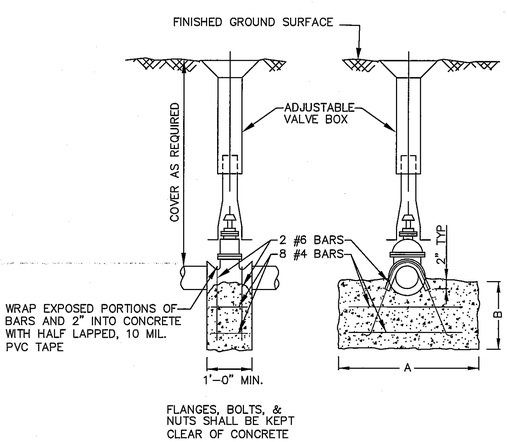

SIZE OF GATE VALVE	ANCHOR BLOCK DIMENSIONS (FT.)		
	A	B	
		200 PSI TEST	250 PSI TEST
3"	1.5	1.5	2.0
4"	2.0	1.5	2.0
6"	3.0	1.5	2.0
8"	3.0	1.5	2.0
10"	3.0	2.0	2.5
12"	3.5	2.0	2.5

WATER GATE DETAIL

NOT TO SCALE

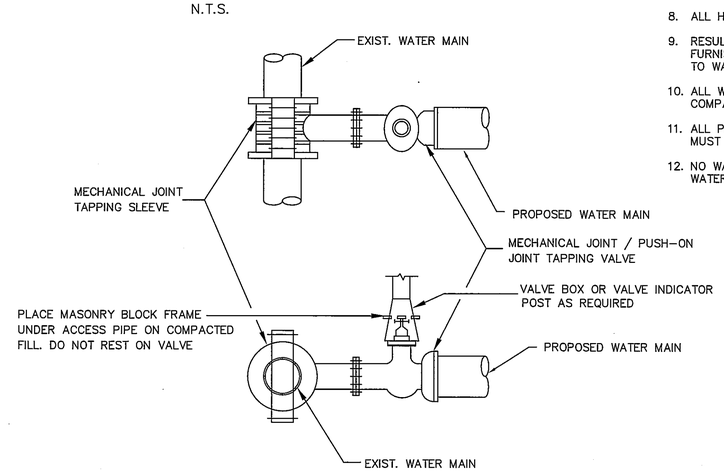

TYPICAL TAPPING SLEEVE AND VALVE

NOT TO SCALE

© MCKENZIE ENGINEERING GROUP, INC.

REV	DATE	DESCRIPTION	BY	APP
1	1/8/18	RECONFIGURATION	SBS	BCM
2	1/19/18	REVIEW COMMENTS	SBS	BCM
3	2/2/18	REVIEW COMMENTS	SBS	BCM
4	3/8/18	REVIEW COMMENTS	SBS	BCM
5	4/25/18	NO CHANGES	SBS	BCM

MCKENZIE ENGINEERING GROUP
Assinippi Office Park
150 Longwater Drive, Suite 101
Norwell, MA 02061
Ph: 781-792-3900
www.mckeng.com

COMPREHENSIVE PERMIT PLAN

KNOWN AS

RIVER STONE

(ASSESSORS MAP 124, LOTS 70-75 & LOT 26)
VIKING LANE & WARD STREET
HINGHAM, MASSACHUSETTS

PROFESSIONAL ENGINEER:
COMMONWEALTH OF MASSACHUSETTS
BRADLEY C. MCKENZIE
CIVIL
No. 36917
REGISTERED PROFESSIONAL ENGINEER

ZBA PERMIT PLAN

APPLICANT:
RIVER STONE, LLC
293R WASHINGTON STREET
NORWELL, MASSACHUSETTS 02061

DRAWN BY:	JLS
DESIGNED BY:	- -
CHECKED BY:	- -
APPROVED BY:	- -
DATE:	10/7/2015
SCALE:	
PROJECT NO.:	27-135

DWG. TITLE:
Construction Details
Sheet 6 of 7

DWG. NO: C-9

M:\MEG\2007 PROJECTS\27-135\DWGS\CUT SHEETS\SUBMISSION R6\27-135 DETAILS (R6).DWG

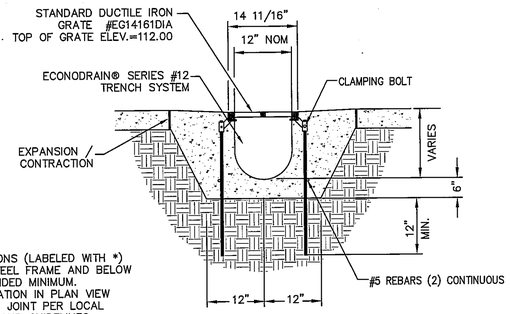

MONOLITHIC POUR INSTALLATION DETAIL

NOTES TO THE SPECIFIER:
1. ADD REBAR AS REQUIRED
2. SPECIFY REQUIRED DIMENSIONS (LABELED WITH *) USING 6" EACH SIDE OF STEEL FRAME AND BELOW EPS FORM AS A RECOMMENDED MINIMUM.
3. SHOW TOP OF GRATE ELEVATION IN PLAN VIEW
4. EXPANSION / CONTRACTION JOINT PER LOCAL ENGINEERING REGULATIONS AND GUIDELINES
5. STANDARD CHANNEL LENGTH IS 8'-0" (96")
6. STANDARD CHANNEL SLOPE IS 0.5%

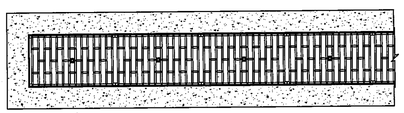

PLAN VIEW

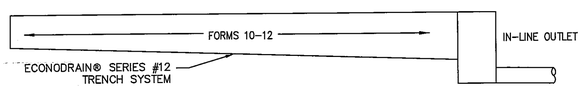

	EPS FORM	DEPTH MIN	DEPTH MAX	FLOW GPM
SHALLOW EPS FORMS	10	8"	8 1/2"	743
	11	8 1/2"	9"	829
	12	9"	9 1/2"	915
	13	9 1/2"	10"	1003
	14	10"	10 1/2"	1091
	15	10 1/2"	11"	1180
	16	11"	11 1/2"	1269
	17	11 1/2"	12"	1359
	18	12"	12 1/2"	1450
	19	12 1/2"	13"	1541
	20	13"	13 1/2"	1633
	21	13 1/2"	14"	1725
	22	14"	14 1/2"	1817
	23	14 1/2"	15"	1910
DEEP EPS FORMS	24	15"	15 1/2"	2002
	25	15 1/2"	16"	2095
	26	16"	16 1/2"	2189
	27	16 1/2"	17"	2282
	28	17"	17 1/2"	2376
	29	17 1/2"	18"	2470
	30	18"	18 1/2"	2564
	31	18 1/2"	19"	2658
	32	19"	19 1/2"	2753
	33	19 1/2"	20"	2847
	34	20"	20 1/2"	2942
	35	20 1/2"	21"	3036
	36	21"	21 1/2"	3131
	37	21 1/2"	22"	3226
	38	22"	22 1/2"	3321
	39	22 1/2"	23"	3416
	40	23"	23 1/2"	3511
	41	23 1/2"	24"	3607
	42	24"	24 1/2"	3702
	43	24 1/2"	25"	3798
	44	25"	25 1/2"	3893
	45	25 1/2"	26"	3989

EPS FORM CHART

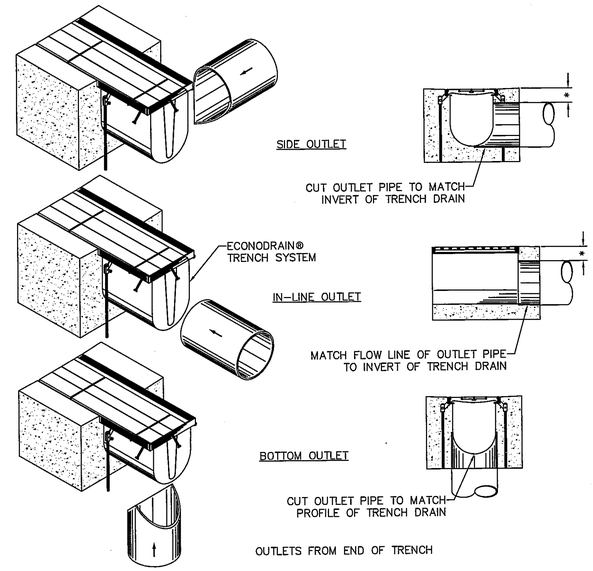

NOTES TO THE SPECIFIER:
1. ADD REBAR AS REQUIRED.
2. SPECIFY MINIMUM CONCRETE ENCASEMENT.
3. 4" MINIMUM CONCRETE COVERAGE OF OUTLET PIPE IS RECOMMENDED (LABELED WITH *).
4. FINAL CONCRETE THICKNESS PER LOCAL ENGINEERING REGULATIONS AND GUIDELINES.

CONSTRUCTION NOTES:
1. INSTALLATION TO BE COMPLETED IN ACCORDANCE WITH MANUFACTURERS SPECIFICATIONS.
2. SECURE OUTLET PIPE PRIOR TO CONCRETING OPERATIONS.
3. FOR ILLUSTRATION ONLY – DO NOT SCALE

ECONODRAIN® SERIES #12 TRENCH DRAIN
SCALE: N.T.S.

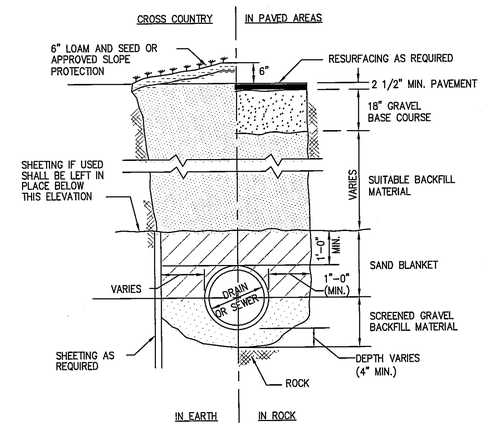

TYPICAL TRENCH DETAIL
SCALE: N.T.S.

REV	DATE	DESCRIPTION	BY	APP
1	1/8/18	RECONFIGURATION	SBS	BCM
2	1/19/18	REVIEW COMMENTS	SBS	BCM
3	2/2/18	REVIEW COMMENTS	SBS	BCM
4	3/9/18	NEW SHEET	SBS	BCM
5	4/25/18	NO CHANGES	SBS	BCM

MCKENZIE ENGINEERING GROUP
Assinippi Office Park
150 Longwater Drive, Suite 101
Norwell, MA 02061
Ph: 781-792-3900
www.mckeng.com

COMPREHENSIVE PERMIT PLAN

KNOWN AS
RIVER STONE
(ASSESSORS MAP 124, LOTS 70-75 & LOT 26)
VIKING LANE & WARD STREET
HINGHAM, MASSACHUSETTS

PROFESSIONAL ENGINEER:
COMMONWEALTH OF MASSACHUSETTS
BRADLEY C. McKENZIE
CIVIL
No. 36917
REGISTERED PROFESSIONAL ENGINEER

ZBA PERMIT PLAN

APPLICANT:
RIVER STONE, LLC
293R WASHINGTON STREET
NORWELL, MASSACHUSETTS 02061

DRAWN BY:	JLS
DESIGNED BY:	- -
CHECKED BY:	- -
APPROVED BY:	- -
DATE:	10/7/2015
SCALE:	
PROJECT NO.:	27-135

DWG. TITLE:
Construction Details
Sheet 7 of 7

DWG. NO: C-10

© MCKENZIE ENGINEERING GROUP, INC.

M:\MEG\2007 PROJECTS\27-135\DWGS\CUT SHEETS\SUBMISSION R6\27-135 DETAILS (R6).DWG

CONSTRUCTION SEQUENCE

TO PREVENT EXCESSIVE EROSION AND SILTING, THE FOLLOWING CONSTRUCTION SEQUENCE COUPLED WITH OTHER WIDELY ACCEPTED PRINCIPALS FOR REDUCING EROSION AND SEDIMENTATION SHALL BE IMPLEMENTED IN THE DEVELOPMENT OF THE SITE.

1) THE CONTRACTOR SHALL COORDINATE A PRE-CONSTRUCTION MEETING PRIOR TO ANY CONSTRUCTION ACTIVITY.
2) STABILIZATION PRACTICES FOR EROSION AND SEDIMENT CONTROL SHALL BE INSTALLED PRIOR TO COMMENCING CONSTRUCTION ACTIVITIES. REFER TO "EROSION AND SEDIMENTATION CONTROL" SECTION OF THIS PLAN.

   PLACE SILTATION FENCE AND HAYBALE BARRIERS AT LOCATIONS INDICATED ON THE SITE PLANS.
3) CLEAR AND GRUB UP AS REQUIRED FOR THE CONSTRUCTION OF THE ROADWAY AND RELATED INFRASTRUCTURE.
4) CONSTRUCT STABILIZED CONSTRUCTION ENTRANCE AT WARD STREET.
5) EXCAVATE TOPSOIL AND SUBSOIL FROM CUT AND FILL AREAS AND STOCKPILE ON SITE IN LOCATIONS SHOWN ON THE PLAN. CONSIDERATION SHOULD BE GIVEN TO LOCATING STOCKPILES ON THE UPHILL SIDE OF DISTURBED AREAS, WHERE POSSIBLE, TO ACT AS TEMPORARY DIVERSIONS.
6) CONSTRUCT CUT AND FILL AREAS, INSTALLING HAYBALE CHECK DAMS AT TOES OF ALL 3:1 OR GREATER SLOPES, AND AT ENDS OF ALL CUT AREAS. ALL FILL WILL BE INSTALLED USING 12" MAXIMUM COMPACTION LIFTS. PLACE ALL SLOPE PROTECTION WHERE INDICATED ON THE PLAN. THE STORMWATER EXTENDED DETENTION BASIN SHALL BE CONSTRUCTED IMMEDIATELY AFTER THE ROADWAY ROUGH GRADING IS COMPLETED AND THE AREA HAS BEEN CLEARED OF VEGETATION.
7) INSTALL CLOSED DRAINAGE SYSTEM AND OTHER UTILITIES. ALL CATCH BASINS SHALL BE COVERED WITH SILTSACK OR EQUIVALENT INLET PROTECTION.
8) GRADE ROADWAY TO SUBGRADE ELEVATION AND CONSTRUCT SIDE SLOPES. APPLY TEMPORARY STABILIZATION MEASURES WHERE WARRANTED. REFER TO "EROSION AND SEDIMENT CONTROL" SECTION OF THIS PLAN.
10) PLACE GRAVEL SUBBASE PER CONSTRUCTION DRAWINGS.
11) PLACE THE BITUMINOUS CONCRETE BINDER COURSE ON ROADWAYS.
12) GRADE SLOPES AND STABILIZE CUT AREAS AT TOE OF SLOPES. BLEND ALL SLOPES INTO EXISTING TOPOGRAPHY AND LOAM AND SEED ALL DISTURBED AREAS. SLOPES GREATER THAN 3:1 SHALL BE STABILIZED WITH JUTE MESH.
13) PLACE THE FINAL WEARING COURSE OF PAVEMENT.
14) COMPLETE FINE GRADING OF SHOULDERS AND PLACE PAVEMENT IN MISCELLANEOUS AREAS.
15) REMOVE TEMPORARY EROSION CONTROL DEVICES ONCE ADEQUATE GROWTH IS ESTABLISHED. ADEQUATE GROWTH IS DEFINED AS VEGETATION COVERING 75% OR MORE OF THE GROUND SURFACE.

EROSION AND SEDIMENTATION CONTROL

REFER TO CONSTRUCTION PHASE BEST MANAGEMENT PRACTICES AS SPECIFIED IN "BEST MANAGEMENT PRACTICES OPERATION AND MAINTENANCE PLAN" PREPARED BY McKENZIE ENGINEERING GROUP, INC. FOR STRUCTURAL STABILIZATION AND DUST CONTROL EROSION AND SEDIMENTATION CONTROL MEASURES.

STRUCTURAL PRACTICES UTILIZED FOR THE PROJECT WILL INCLUDE SEDIMENT FENCE/HAYBALE BARRIER CONTROLS, STABILIZED CONSTRUCTION ENTRANCE, TEMPORARY DIVERSION SWALES WITH STONE CHECK DAMS, SEDIMENT BASINS, AND INLET PROTECTION SUBJECT TO THE TOWN OF HINGHAM CONSERVATION COMMISSION APPROVAL.

STABILIZATION PRACTICES UTILIZED FOR THE PROJECT WILL INCLUDE TEMPORARY SEEDING, GEOTEXTILES (JUTE MESH), MULCHING, AND PERMANENT SEEDING.

IN GENERAL, THE SMALLEST POSSIBLE AREA OF LAND SHALL BE EXPOSED AT ONE TIME. WHEN LAND IS EXPOSED DURING DEVELOPMENT, THE EXPOSURE SHALL BE CONFINED TO A MAXIMUM PERIOD OF 3 MONTHS. LAND SHALL NOT BE EXPOSED DURING THE WINTER MONTHS. ANY DISTURBED AREAS WHICH ARE TO BE LEFT TEMPORARILY AND THAT WILL BE REGRADED AT A LATER DATE SHALL BE MACHINE HAY MULCHED AND SEEDED WITH WINTER RYE TO PREVENT EROSION.

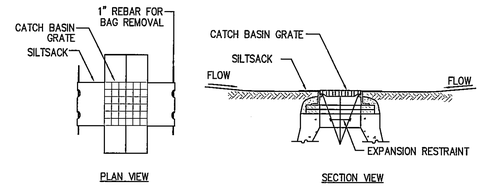

SILT SACK SEDIMENT TRAP CONTRUCTION NOTES:

1. INSTALL SILTSACK IN ALL CATCH BASINS WHERE INDICATED ON THE PLAN BEFORE COMMENCING WORK OR IN PAVED AREAS AFTER BINDER COURSE IS PLACED AND HAY BALES HAVE BEEN REMOVED.
2. GRATE TO BE PLACED OVER SILTSACK.
3. SILTSACK SHALL BE INSPECTED PERIODICALLY AND AFTER ALL STORM EVENTS AND CLEANING OR REPLACEMENT SHALL BE PERFORMED PROMPTLY AS NEEDED. MAINTAIN UNTIL UPSTREAM AREAS HAVE BEEN PERMANENTLY STABILIZED

SILTSACK SEDIMENT TRAP
SCALE: N.T.S.

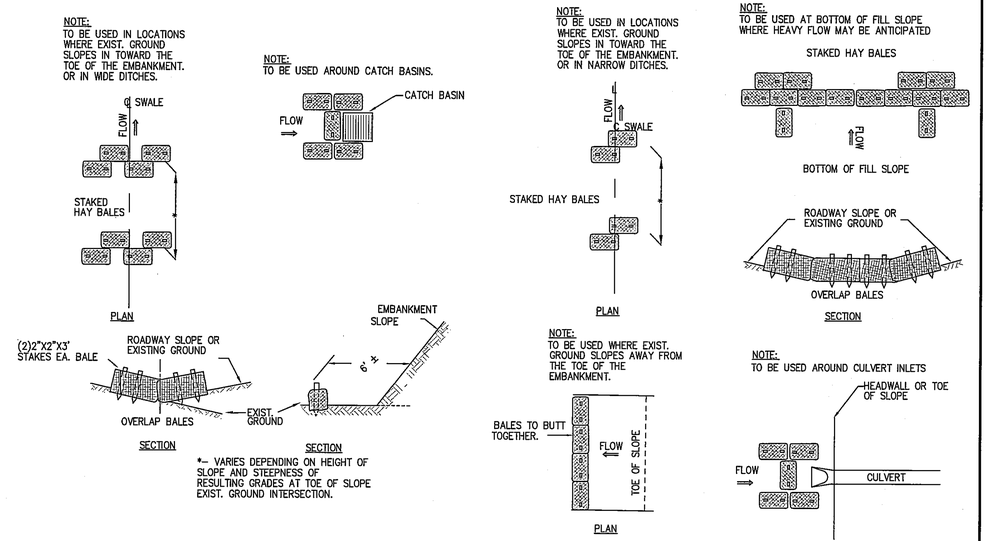

TEMPORARY EROSION CONTROL
SCALE: N.T.S.

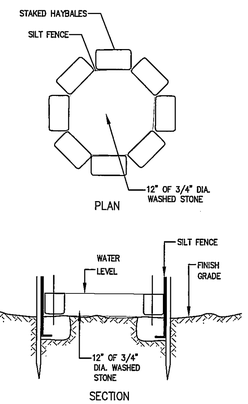

DEWATERING FILTER DETAIL
SCALE: N.T.S.

DEWATERING METHODS SHALL BE EMPLOYED IN ANY AREA WHERE PUMPING OF GROUNDWATER IS NECESSARY TO CONSTRUCT THE PROPOSED PARKING LOT AND UTILITIES. DETAILS SHOWN ON THIS PLAN SHALL BE USED AND ANY MODIFICATION SHALL BE APPROVED BY THE TOWN OF PEMBROKE.

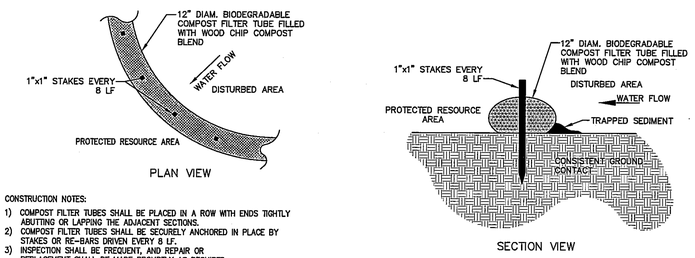

CONSTRUCTION NOTES:

1) COMPOST FILTER TUBES SHALL BE PLACED IN A ROW WITH ENDS TIGHTLY ABUTTING OR LAPPING THE ADJACENT SECTIONS.
2) COMPOST FILTER TUBES SHALL BE SECURELY ANCHORED IN PLACE BY STAKES OR RE-BARS DRIVEN EVERY 8 LF.
3) INSPECTION SHALL BE FREQUENT, AND REPAIR OR REPLACEMENT SHALL BE MADE PROMPTLY AS REQUIRED.
4) COMPOST FILTER TUBES SHALL BE REMOVED WHEN THEY HAVE SERVED THEIR USEFULNESS, SO AS NOT TO BLOCK OR IMPEDE STORM FLOW OR DRAINAGE.

SILT SOCK DETAIL
SCALE: N.T.S.

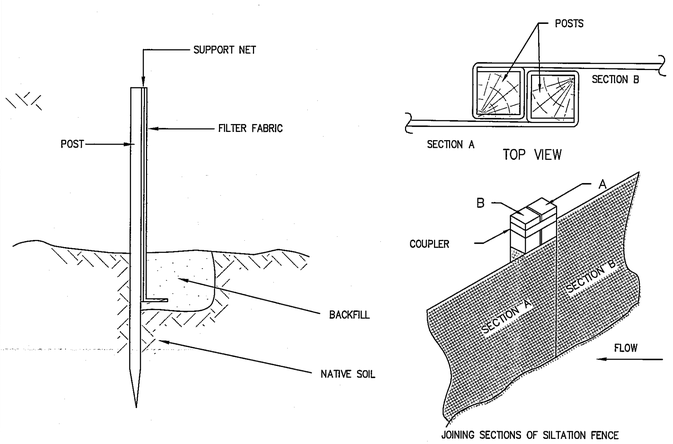

CONSTRUCTION NOTES:

1) WOVEN WIRE FENCE TO BE FASTENED SECURELY TO FENCE POSTS WITH WIRE TIES OR STAPLES.
2) FILTER CLOTH TO BE FASTENED SECURELY TO WOVEN WIRE FENCE WITH TIES SPACED EVERY 24" AT TOP AND MID SECTION.
3) WHEN TWO SECTIONS OF FILTER CLOTH ADJOIN EACH OTHER, THEY SHALL BE OVERLAPPED BY 6 INCHES AND FOLDED.
4) MAINTENANCE SHALL BE PERFORMED AS NEEDED AND MATERIAL REMOVED WHEN "BULGES" DEVELOP IN THE SILT FENCE.

CONSTRUCTION NOTES:

1) BALES SHALL BE PLACED IN A ROW WITH ENDS TIGHTLY ABUTTING THE ADJACENT BALES.
2) EACH BALE SHALL BE EMBEDDED IN THE SOIL A MINIMUM DEPTH OF 4".
3) BALES SHALL BE SECURELY ANCHORED IN PLACE BY STAKES OR RE-BARS DRIVEN THROUGH THE BALES. THE FIRST STAKE IN EACH BALE SHALL BE ANGLED TOWARD PREVIOUSLY LAID BALE TO FORCE BALES TOGETHER.
4) INSPECTION SHALL BE FREQUENT, AND REPAIR OR REPLACEMENT SHALL BE MADE PROMPTLY AS REQUIRED.
5) BALES SHALL BE REMOVED WHEN THEY HAVE SERVED THEIR USEFULLNESS, SO AS NOT TO BLOCK OR IMPEDE STORM FLOW OR DRAINAGE.

SILTATION FENCE
SCALE: N.T.S.

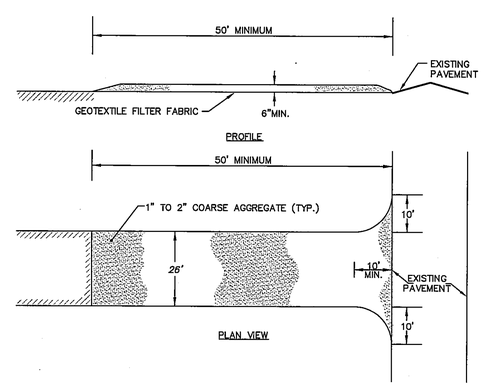

STABILIZED CONSTRUCTION ENTRANCE DETAIL
SCALE: N.T.S.

CONSTRUCTION SPECIFICATIONS:

1. STONE FOR A STABILIZATION CONSTRUCTION ENTRANCE SHALL BE 1 TO 2 INCH STONE, RECLAIMED STONE.
2. THE LENGTH OF THE STABILIZED ENTRANCE SHALL NOT BE LESS THAN 50 FEET, EXCEPT FOR A SINGLE RESIDENTIAL LOT A 30 FOOT MINIMUM LENGTH WOULD APPLY.
3. THE THICKNESS OF THE STONE FOR THE STABILIZED ENTRANCE SHALL NOT BE LESS THAN 6 INCHES.
4. GEOTEXTILE FILTER CLOTH SHALL BE PLACED OVER THE ENTIRE AREA PRIOR TO PLACING THE STONE.
5. ALL SURFACE WATER THAT IS FLOWING TO OR DEVERTED TOWARDS THE CONSTRUCTION ENTRANCE SHALL BE PIPED BENEATH THE ENTRANCE. IF PIPING IS IMPRACTICAL, A BERM WITH 5:1 SLOPES THAT CAN BE CROSSED BY VEHICLES MAY BE SUBSTITUTED FOR THE PIPE.
6. THE ENTRANCE SHALL BE MAINTAINED IN A CONDITION THAT WILL PREVENT TRACKING OR FLOWING OF SEDIMENT ONTO PUBLIC RIGHTS-OF-WAY. THIS MAY REQUIRE PERIODIC TOPDRESSING WITH ADDITIONAL STONE AS CONDITIONS DEMAND AND REPAIR AND/OR CLEANOUT OF ANY MEASURES USED TO TRAP SEDIMENT. ALL SEDIMENT SPILLED, WASHED, OR TRACKED ONTO PUBLIC RIGHT-OF-WAY MUST BE REMOVED PROMPTLY.

© MCKENZIE ENGINEERING GROUP, INC.

M:\MEG\2007 PROJECTS\27-135\DWGS\CUT SHEETS\SUBMISSION R6\27-135 DETAILS (R6).DWG

REV	DATE	DESCRIPTION	BY	APP
1	1/8/18	RECONFIGURATION	SBS	BCM
2	1/19/18	NO CHANGES	SBS	BCM
3	2/2/18	NO CHANGES	SBS	BCM
4	3/9/18	REVIEW COMMENTS	SBS	BCM
5	4/25/18	NO CHANGES	SBS	BCM

MCKENZIE ENGINEERING GROUP
Assinippi Office Park
150 Longwater Drive, Suite 101
Norwell, MA 02061
Ph: 781-792-3900
www.mckeng.com

COMPREHENSIVE PERMIT PLAN

KNOWN AS
RIVER STONE
(ASSESSORS MAP 124, LOTS 70-75 & LOT 26)
VIKING LANE & WARD STREET
HINGHAM, MASSACHUSETTS

PROFESSIONAL ENGINEER:
COMMONWEALTH OF MASSACHUSETTS
BRADLEY C. McKENZIE
CIVIL
No. 34917
REGISTERED PROFESSIONAL ENGINEER

ZBA PERMIT PLAN

APPLICANT:
RIVER STONE, LLC
293R WASHINGTON STREET
NORWELL, MASSACHUSETTS 02061

DRAWN BY:	JLS
DESIGNED BY:	- -
CHECKED BY:	- -
APPROVED BY:	- -
DATE:	10/7/2015
SCALE:	
PROJECT NO.:	27-135

DWG. TITLE:
Erosion Control Details

DWG. NO: C-11

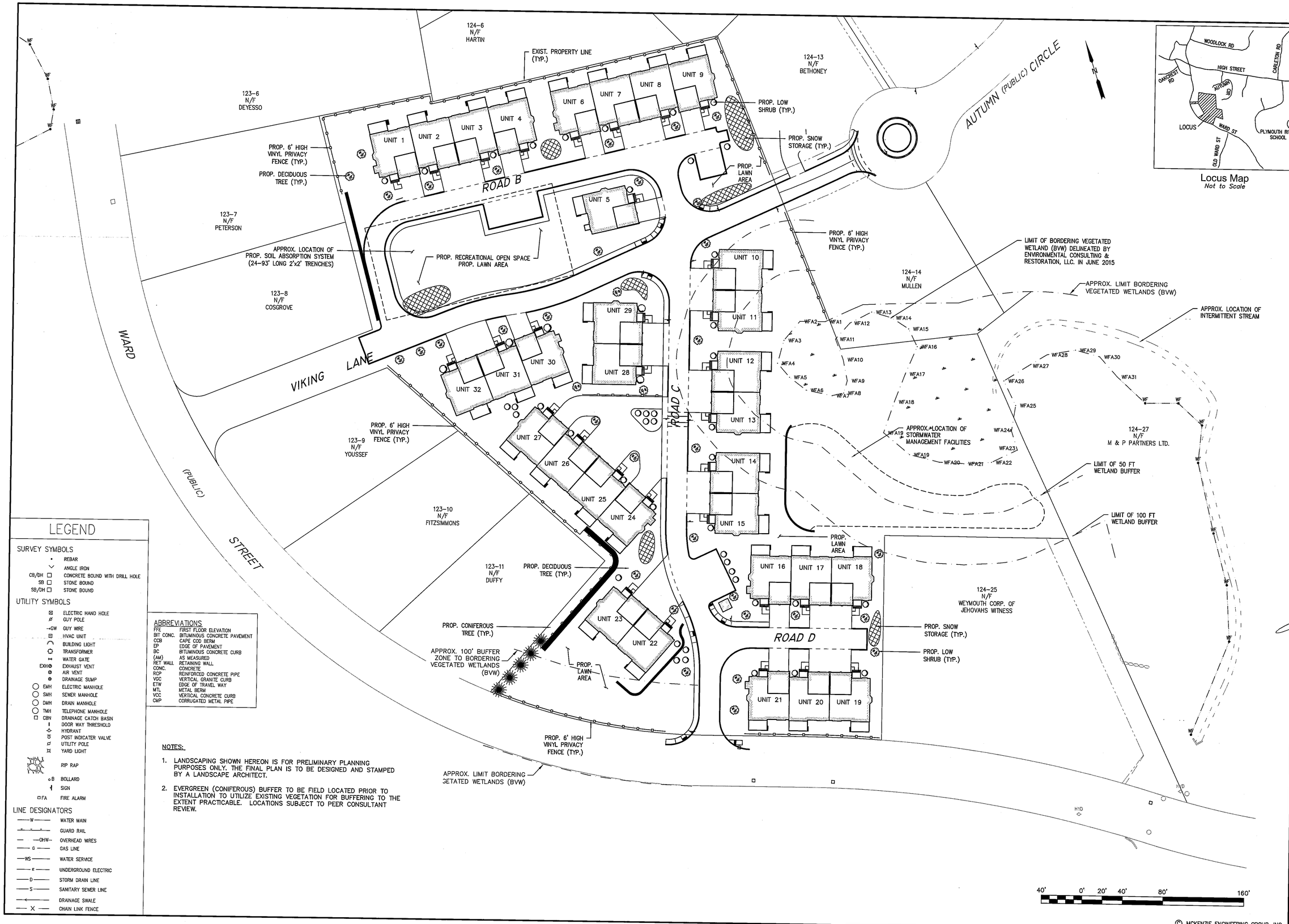

Locus Map
Not to Scale

LEGEND

SURVEY SYMBOLS

- REBAR
- ANGLE IRON
- CB/DH — CONCRETE BOUND WITH DRILL HOLE
- SB — STONE BOUND
- SB/DH — STONE BOUND

UTILITY SYMBOLS

- ELECTRIC HAND HOLE
- GUY POLE
- GW — GUY WIRE
- HVAC UNIT
- BUILDING LIGHT
- TRANSFORMER
- WATER GATE
- EXH — EXHAUST VENT
- AIR VENT
- DRAINAGE SUMP
- EMH — ELECTRIC MANHOLE
- SMH — SEWER MANHOLE
- DMH — DRAIN MANHOLE
- TMH — TELEPHONE MANHOLE
- CBN — DRAINAGE CATCH BASIN
- DOOR WAY THRESHOLD
- HYDRANT
- POST INDICATER VALVE
- UTILITY POLE
- YARD LIGHT
- RIP RAP
- B — BOLLARD
- SIGN
- FA — FIRE ALARM

LINE DESIGNATORS

- W — WATER MAIN
- GUARD RAIL
- OHW — OVERHEAD WIRES
- G — GAS LINE
- WS — WATER SERVICE
- E — UNDERGROUND ELECTRIC
- D — STORM DRAIN LINE
- S — SANITARY SEWER LINE
- DRAINAGE SWALE
- X — CHAIN LINK FENCE

ABBREVIATIONS

FFE	FIRST FLOOR ELEVATION
BIT CONC.	BITUMINOUS CONCRETE PAVEMENT
CCB	CAPE COD BERM
EP	EDGE OF PAVEMENT
BC	BITUMINOUS CONCRETE CURB
(AM)	AS MEASURED
RET WALL	RETAINING WALL
CONC.	CONCRETE
RCP	REINFORCED CONCRETE PIPE
VCC	VERTICAL GRANITE CURB
ETW	EDGE OF TRAVEL WAY
MTL	METAL BERM
VCC	VERTICAL CONCRETE CURB
CMP	CORRUGATED METAL PIPE

NOTES:

1. LANDSCAPING SHOWN HEREON IS FOR PRELIMINARY PLANNING PURPOSES ONLY. THE FINAL PLAN IS TO BE DESIGNED AND STAMPED BY A LANDSCAPE ARCHITECT.
2. EVERGREEN (CONIFEROUS) BUFFER TO BE FIELD LOCATED PRIOR TO INSTALLATION TO UTILIZE EXISTING VEGETATION FOR BUFFERING TO THE EXTENT PRACTICABLE. LOCATIONS SUBJECT TO PEER CONSULTANT REVIEW.

REV	DATE	DESCRIPTION	BY	APP
1	1/8/18	RECONFIGURATION	SBS	BCM
2	1/19/18	NEW SHEET	SBS	BCM
3	2/2/18	REVIEW COMMENTS	SBS	BCM
4	3/9/18	REVIEW COMMENTS	SBS	BCM
5	4/25/18	REVIEW COMMENTS	SBS	BCM

MCKENZIE ENGINEERING GROUP
Assinippi Office Park
150 Longwater Drive, Suite 101
Norwell, MA 02061
Ph: 781-792-3900
www.mckeng.com

COMPREHENSIVE PERMIT PLAN

KNOWN AS

RIVER STONE

(ASSESSORS MAP 124, LOTS 70-75 & LOT 26)
VIKING LANE & WARD STREET
HINGHAM, MASSACHUSETTS

PROFESSIONAL ENGINEER:
COMMONWEALTH OF MASSACHUSETTS
BRADLEY C. MCKENZIE
CIVIL
No. 36917
REGISTERED PROFESSIONAL ENGINEER

ZBA PERMIT PLAN

APPLICANT:
RIVER STONE, LLC
293R WASHINGTON STREET
NORWELL, MASSACHUSETTS 02061

DRAWN BY:	JLS
DESIGNED BY:	- -
CHECKED BY:	- -
APPROVED BY:	- -
DATE:	10/7/2015
SCALE:	1"=40'
PROJECT NO.:	27-135

DWG. TITLE:
Preliminary Landscape Plan

DWG. NO: LS-1

© MCKENZIE ENGINEERING GROUP, INC.

M:\MEG\2007 PROJECTS\27-135\DWGS\CUT SHEETS\SUBMISSION R6\27-135 LS-1 (R6).DWG

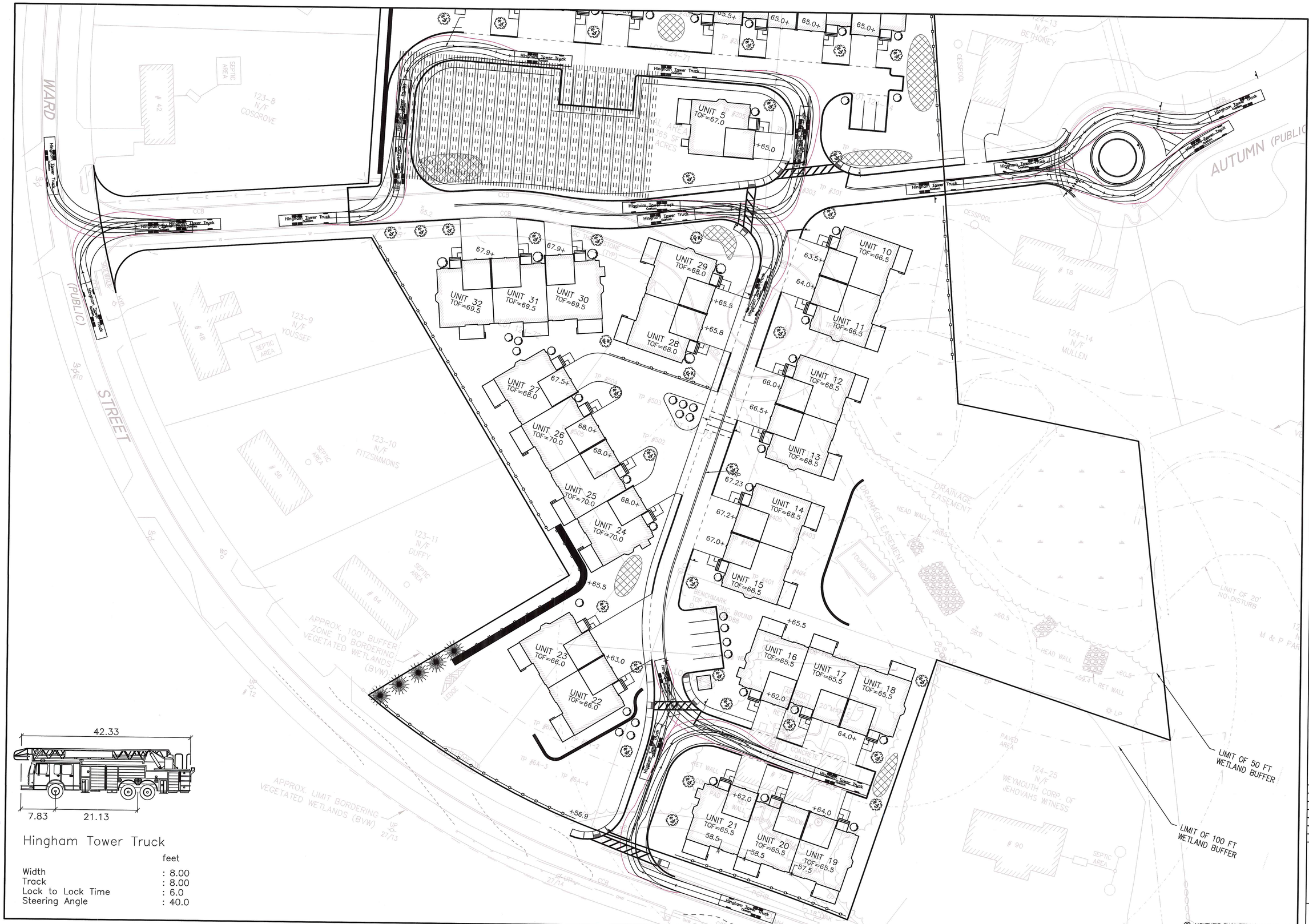

Hingham Tower Truck

	feet
Width	: 8.00
Track	: 8.00
Lock to Lock Time	: 6.0
Steering Angle	: 40.0

© MCKENZIE ENGINEERING GROUP, INC.

M:\MEG\2007 PROJECTS\27-135\DWGS\27-135 MAIN_FINAL (R6) (AUTOTURN).DWG

REV.	DATE	DESCRIPTION	BY	APP
1	1/8/18	RECONFIGURATION	SBS	BCM
2	1/19/18	NEW SHEET	SBS	BCM
3	2/2/18	REVIEW COMMENTS	SBS	BCM
4	3/9/18	REVIEW COMMENTS	SBS	BCM
5	4/25/18	REVIEW COMMENTS	SBS	BCM

MCKENZIE ENGINEERING GROUP
Assinippi Office Park
150 Longwater Drive, Suite 101
Norwell, MA 02061
Ph: 781-792-3900
www.mckeng.com

COMPREHENSIVE PERMIT PLAN

KNOWN AS

RIVER STONE

(ASSESSORS MAP 124, LOTS 70-75 & LOT 26)

VIKING LANE & WARD STREET

HINGHAM, MASSACHUSETTS

PROFESSIONAL ENGINEER:

ZBA PERMIT PLAN

APPLICANT:
RIVER STONE, LLC
293R WASHINGTON STREET
NORWELL, MASSACHUSETTS 02061

DRAWN BY:	JLS
DESIGNED BY:	- -
CHECKED BY:	- -
APPROVED BY:	- -
DATE:	10/7/2015
SCALE:	1"=40'
PROJECT NO.:	27-135

DWG. TITLE:

TRUCK TURNING PLAN HINGHAM FIRE TRUCK

DWG. NO:

TT-1

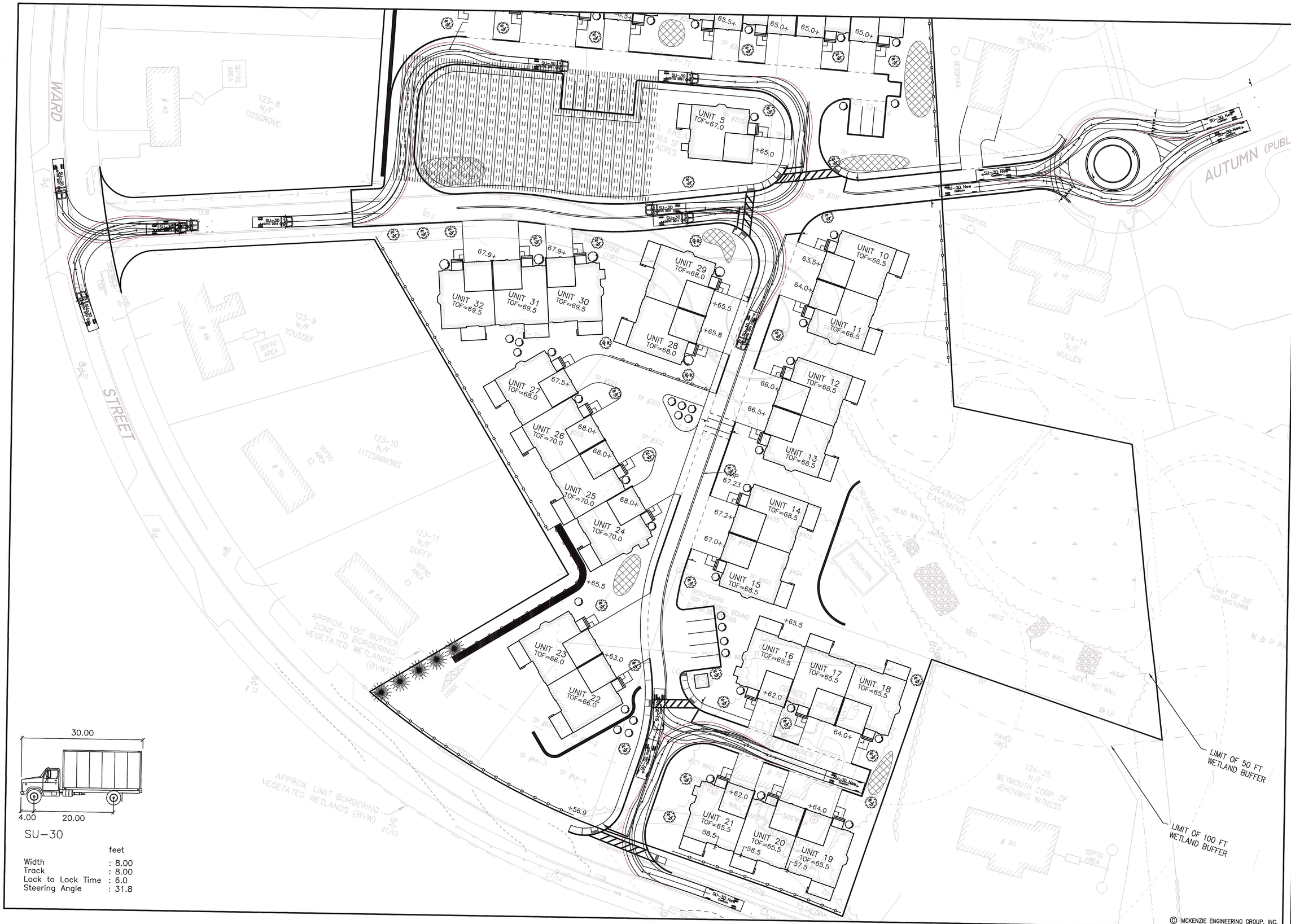

	feet
Width	: 8.00
Track	: 8.00
Lock to Lock Time	: 6.0
Steering Angle	: 31.8

REV	DATE	DESCRIPTION	BY	APP
1	1/8/18	RECONFIGURATION	SBS	BCM
2	1/19/18	NEW SHEET	SBS	BCM
3	2/2/18	REVIEW COMMENTS	SBS	BCM
4	3/9/18	REVIEW COMMENTS	SBS	BCM
5	4/25/18	REVIEW COMMENTS	SBS	BCM

MCKENZIE ENGINEERING GROUP
Assinippi Office Park
150 Longwater Drive, Suite 101
Norwell, MA 02061
Ph: 781-792-3900
www.mckeng.com

COMPREHENSIVE PERMIT PLAN

KNOWN AS

RIVER STONE

(ASSESSORS MAP 124, LOTS 70-75 & LOT 26)
VIKING LANE & WARD STREET
HINGHAM, MASSACHUSETTS

PROFESSIONAL ENGINEER:

ZBA PERMIT PLAN

APPLICANT:
RIVER STONE, LLC
293R WASHINGTON STREET
NORWELL, MASSACHUSETTS 02061

DRAWN BY:	JLS
DESIGNED BY:	- -
CHECKED BY:	- -
APPROVED BY:	- -
DATE:	10/7/2015
SCALE:	1"=40'
PROJECT NO.:	27-135

DWG. TITLE:

TRUCK TURNING PLAN SU-30 TRUCK

DWG. NO:

TT-2

© MCKENZIE ENGINEERING GROUP, INC.

M:\MEG\2007 PROJECTS\27-135\DWGS\27-135 MAIN_FINAL (R6) (AUTOTURN).DWG